CHAPTER 1

SPECIFICATIONS / GAUGE / AUDIO

1

GENERAL INFORMATION 1.3
TRADEMARKS 1.3
SERVICE RULES 1.3
SAFETY INFORMATION 1.4
GENERAL SPECIFICATIONS 1.5
2008 - 2009 SPECIFICATIONS 1.5
2010 SPECIFICATIONS 1.7
VEHICLE LOADING 1.9
VEHICLE INFORMATION 1.10
VEHICLE IDENTIFICATION NUMBER (VIN) 1.10
MODEL NUMBER 1.10
VIN NUMBER / MANUFACTURER LABEL 1.11
ENGINE NUMBER LOCATION 1.11
VECI / NECI / TIRE INFORMATION LABELS 1.11
KEY IDENTIFICATION NUMBER 1.11
PUBLICATIONS & TECHNICAL LITERATURE 1.12
PUBLICATION PART NUMBERS 1.12
MATERIAL SAFETY DATA SHEET (MSDS) 1.12
REFINISHING 1.13
VICTORY TOUCH-UP & REFINISHING PAINT 1.13
VICTORY DETAIL & FINISH RESTORER KITS AND PRODUCTS 1.13
PAINTING TERMS 1.13
PAINT COLORS BY MODEL 1.14
PAINT COLOR CODES 1.16
BREAK IN PERIOD 1.17
EMISSIONS 1.18
SPECIAL SERVICE TOOLS 1.19
TRANSPORTING, ELEVATING, AND SECURING THE MOTORCYCLE 1.22
INSTRUMENTATION / CONTROLS 1.23
CLOCK, GEAR POSITION, TRIP ODOMETER, TEMPERATURE, ODOMETER 1.25
CHANGING INFORMATION DISPLAY UNITS 1.26
CONSOLE MOUNTED SWITCHES 1.26
HAND GRIP HEATER SWITCH 1.26
HAZARD SWITCH (EMERGENCY FLASHERS) 1.26
DRIVING LAMP SWITCH 1.26
INDICATOR LAMPS 1.27
SEAT HEATER 1.28
LEFT HANDLEBAR SWITCH, MODE BUTTON 1.28
HEADLAMP HIGH / LOW BEAM SWITCH 1.28
WINDSHIELD ADJUSTMENT SWITCH (MOTORIZED) 1.28
MANUAL WINDSHIELD ADJUSTMENT 1.29
TURN SIGNAL SWITCH 1.29
CLUTCH LEVER & STARTER INTERLOCK 1.29
RIGHT HANDLEBAR CONTROLS, ENGINE STOP SWITCH, STARTER BUTTON . . 1.30
AUDIO / COM / CRUISE CONTROL BUTTONS 1.30
MIRRORS 1.30
LINKED BRAKE SYSTEM / ABS BRAKE SYSTEM 1.30
FRONT BRAKE LEVER REACH ADJUSTMENT 1.31
FOOT CONTROL ADJUSTMENT 1.31
FUEL DOOR, FUEL CAP 1.32
GLOVE / STORAGE COMPARTMENT 1.32
SADDLEBAGS, TRUNK OPERATION 1.33

© 2009 Polaris Sales Inc.

RADIO / AUDIO SYSTEM 1.34
RADIO / AUDIO SYSTEMS OPERATION 1.34
RADIO FREQUENCIES 1.34
MAIN USER INTERFACE 1.34
LEFT HAND CONTROLS / REAR PASSENGER CONTROL 1.35
AUDIO SYSTEM POWER 1.35
VOLUME CONTROL / AUDIO MUTE / AUDIO VOLUME / PASSENGER VOLUME . . 1.36
AUDIO SOURCE SELECTION. 1.37
AUDIO TUNING 1.38
MEMORY PRESETS 1.38
AUDIO MODE MENUS. 1.38
BASS, TREBLE, FADER, EXTERNAL SPEAKER SETTING, AVC 1.39
CB HEADSET VOLUME CONTROLS / CB HEADSET ENT MODE* 1.40
ICOM VOLUME 1.40
TUNING (SEEK / SCAN MODES) 1.40
RADIO DATA SYSTEM (RDS) AUX MODE. 1.41
XM DISPLAY / XM TUNE MODE 1.41
XM CATEGORY 1.42
NOAA WEATHER BAND (WB OR WX) 1.42
CB RADIO / ICOM SYSTEM 1.43
CB RADIO FCC RULES 1.43
HEADSET USE 1.43
GETTING STARTED / CB CHANNELS 1.43
PUSH-TO-TALK (PTT) / SQUELCH. 1.44
CB RADIO VOLUME SETTING (DRIVER / PASSENGER) 1.45
CB LO/DX* 1.45
CB FREQUENCIES 1.46
ICOM SYSTEM. 1.46
VOX BREAK SETTING 1.46
ICOM VOLUME SETTING (DRIVER / PASSENGER) 1.47
HEADSET RECEPTACLES 1.47
AUX / IPOD 1.48
GETTING STARTED / AUX INPUT CABLE / INPUT CABLE SETUP 1.48
IPOD USE. 1.48
AUX MODE (2010) 1.49
IPOD PLAY LISTS / IPOD TUNING 1.49
XM RADIO 1.50
ABOUT XM RADIO. 1.50
XM READY LEGAL 1.50
XM READY SUBSCRIPTION 1.50
GETTING STARTED - XM RADIO 1.50
XM RADIO RECEPTION / XM RADIO SPECIFIC MENU OPTIONS. 1.51
XM RADIO SETTINGS / XM CATEGORY SELECTION 1.51
XM CHANNEL SELECTION. 1.52
NAV MP3 . . . . . 1.52
BEFORE YOU BEGIN 1.52
TIPS FOR OPERATION 1.52
GETTING STARTED / CHANGING AUX MODE TO NAV MP3. . . . . 1.53
CD CHANGER (2008-2009) 1.54
REFERENCE. 1.55
SAE TAP DRILL SIZES 1.55
METRIC TAP DRILL SIZES 1.55
DECIMAL EQUIVALENTS 1.55
FAHRENHEIT TO CELSIUS 1.56
MEASUREMENT CONVERSION CHART 1.56

© 2009 Polaris Sales Inc.

GENERAL INFORMATION

TRADEMARKS

The following are REGISTERED trademarks of Polaris Industries Inc.:

VICTORY MOTORCYCLES, VICTORY, VICTORY PERFORMANCE, VICTORY VISION, NESS SIGNATURE SERIES VICTORY VISION, FREEDOM, POLARIS; POLARIS THE WAY OUT; VEGAS; VEGAS JACKPOT; HAMMER; KINGPIN; NESS SIGNATURE SERIES VEGAS JACKPOT.

Polaris acknowledges the following products mentioned in this manual:

LOCTITE, is a registered trademark of the Henkel Corporation

DUNLOP, is a registered trademark of the Dunlop Tire Corporation.

STA-BIL, is a registered trademark of Gold Eagle

NYOGEL, trademark of Gold Eagle

FLUKE, registered trademark of the Fluke Corporation

XM, a registered trademark of XM® Satellite Radio, Inc.

SERVICE RULES

In order to perform service work efficiently and prevent costly errors, technicians should read the text in this manual and familiarize themselves with the procedures before beginning. Notes, Cautions and Warnings have been included for clarification of text and safety concerns. Knowledge of mechanical theory, tool use and shop procedures are necessary to perform some procedures in this manual safely and correctly.

Use only genuine Victory service parts, including fasteners that require replacement if removed. Do NOT substitute fasteners or hardware.

Cleanliness of parts and tools as well as the work area is of primary importance. Dirt and foreign matter will cause damage to precision parts. Clean the motorcycle before beginning service. Clean all parts before installing.

If difficulty is encountered in removing or installing a component, look to see if a cause for the difficulty can be found. If it is necessary to tap the part into place, use a soft face hammer and tap lightly.

Always follow torque specifications as outlined throughout this manual. Incorrect torquing may lead to serious machine damage or in the case of steering, driveline, and chassis components, can result in loss of control during operation of the motorcycle, which may result in severe personal injury or death.

If a torquing sequence is indicated for nuts, bolts or screws of a certain component, start all fasteners and hand tighten. Following the method and sequence indicated, tighten evenly to the specified torque value. When removing nuts, bolts or screws from a component with several fasteners, loosen them all about 1/4 turn before removing them to prevent distortion of that component.

Replace all oil seals, sealing washers, gaskets, and O-rings with new ones during assembly. Be sure the mating surfaces for the gasket are clean and smooth to avoid leaks and maintain specified tolerances.

Some procedures require removal of retaining rings or clips. Removal can weaken and deform these parts, therefore, they should always be replaced with new parts. When installing new retaining rings and clips, use care not to expand or compress them beyond what is required for installation.

Victory lubricants and greases have been specially formulated to provide maximum performance and protection when applied properly. In some applications, warranty coverage may be void if improper lubricants are used.

Parts requiring grease should be cleaned thoroughly and fresh grease applied before reassembly. Deteriorating grease loses lubricity and may contain abrasive foreign matter.

Always replace locking hardware such as lock nuts or lock washers, fasteners that have pre-applied locking agent, or any other fasteners as noted in this service manual with genuine Victory hardware from an authorized Victory dealer.

Working with batteries can be hazardous. Review all battery warnings and cautions.

© 2009 Polaris Sales Inc.

SAFETY INFORMATION

Understanding Safety Labels & Instructions

READ AND BECOME FAMILIAR WITH ALL WARNING AND CAUTION SYSMBOLS AND STATEMENTS LISTED BELOW AND IN THE TEXT OF THIS MANUAL BEFORE YOU BEGIN WORK.

This is the safety alert symbol. When you see this symbol on the vehicle or in this manual, be alert to the potential for personal injury. Your safety is involved!

⚠WARNING

Indicates a hazardous situation, which, if not avoided, could result in death or serious injury.

⚠CAUTION

Indicates a hazardous situation, which, if not avoided, could result in minor or moderate injury.

NOTICE:

Indicates a situation, which, if not avoided, could result in damage to the motorcycle.

⚠WARNING

Gasoline is extremely flammable and explosive under certain conditions.

- Always stop the engine and refuel outdoors or in a well ventilated area.
- Do not smoke or allow open flames or sparks in or near the area where refueling is performed or where gasoline is stored.
- Do not overfill the tank. Do not fill the tank neck above the fuel tank insert. Leave air space to allow for fuel expansion.
- If you get gasoline in your eyes or if you swallow gasoline, see your doctor immediately. Never try to syphon gasoline using mouth suction.
- If you spill gasoline on your skin or clothing, immediately wash it off with soap and water and change clothing.
- Never start the engine or let it run in an enclosed area. Engine exhaust fumes are poisonous and can cause loss of consciousness or death in a short time.

⚠WARNING

The engine exhaust from this product contains chemicals known to cause cancer, birth defects or other reproductive harm.

⚠WARNING

Improper repairs or service can create unsafe conditions that may cause severe personal injury or death.

⚠WARNING

The engine and exhaust components on this product become very hot during operation and remain so for a period of time after the engine is stopped.

⚠WARNING

Never run the engine in an enclosed area without a properly functioning exhaust gas evacuation system connected to the product.

⚠WARNING

Modifications to this motorcycle not approved by Victory may cause loss of performance, excessive emissions, and make the machine unsafe for use.

⚠WARNING

Brake fluid is poisonous.

KEEP OUT OF REACH OF CHILDREN.

⚠WARNING

Wear insulated protection for hands and arms or wait until hot components have cooled sufficiently before working on the product.

⚠WARNING

Brake fluid is poisonous. Do not ingest or allow brake fluid to contact eyes. Always wear eye protection when working with brake fluid.

⚠WARNING

Battery electrolyte is poisonous. It contains sulfuric acid. Serious burns can result from contact with skin, eyes or clothing.

⚠WARNING

Care should be taken to be sure the motorcycle will not tip or fall while elevated. Severe personal injury or death could occur if the motorcycle tips or falls.

NOTICE

Brake fluid will damage plastic, painted and rubber parts. Protect these surfaces whenever the brake system is being serviced.

© 2009 Polaris Sales Inc.

GENERAL SPECIFICATIONS

2008 - 2009 Vision Street / Vision Tour / 10th Anniversary Vision / NSS Vision Specifications

		2008-2009 VICTORY VISION Models
CAPACITIES & DIMENSIONS	Oil Capacity	5.0 Qt. (4.75 ltr) (Approximately 4.5 qts. or 4.25 ltr at oil & filter change)
	Fuel Capacity	6.0 US Gal (22.7 ltr) (1.0 U.S. gal / 3.8 ltr reserve)
	Fuel Type / Octane Minimum	Premium Unleaded / 91 Octane
	Dry Weight	Street: 809 lbs (367 kg) / Tour: 849 lbs (385 kg)
	Wet Weight	Street: 844 lbs (383 kg) / Tour: 889 lbs (403 kg)
	Gross Vehicle Weight Rating	Street: 1349 lbs. (612 kg) / Tour: 1414 lbs. (641 kg)
	Gross Axle Weight Rating	Refer to Manufacturer Information label on vehicle
	Maximum Load	Subtract Wet Weight from GVWR. Never exceed GVWR*
	Overall Length	Street: 103.5 in (262.9 cm) / Tour: 104.9 in (266.5 cm)
	Overall Width	45.2 in (114.7 cm)
	Overall Height	58.5 (148.5 cm)
	Seat Height	26.5 in (67.3 cm)
	Ground Clearance	5.8 in (14.8 cm)
	Passenger Capacity	1
	Wheelbase	65.7 in (166.9 cm)
	Rake / Trail	29 Degrees / 5.4 in. (13.7 cm)
ENGINE	Engine Type	Victory Freedom® V-Twin
	Engine Configuration	50° SOHC V-Twin 4 Stroke
	Engine Displacement	1731cc / 106 cubic inch 6 speed (106 / 6 engine)
	Engine Cooling System	Air / Oil
	Compression Ratio	9.4:1
	Compression Pressure	210 - 225 psi (1448 - 1551 kPa)
	Valve Train	4 Valves per cylinder. Hydraulic Lifters & Cam Chain Adjusters (No Adjustment)
	Bore x Stroke	101 x 108 mm
	Starter	Electric / Direct Drive
	Fuel System / Throttle Body Bore Size	Closed Loop Sequential Electronic Fuel Injection / Dual Bore 45 mm
	Exhaust System Type	2-1-2 Split Dual Exhaust With Crossover
	Lubrication System	Wet Sump
	Spark Plug Type (Gap)	NGK DCPR6E (.032 in. / .8 mm)
	Dry Weight (Engine Approximate)	265 lbs. (120 Kg)
BRAKES	Brake Type (Front / Rear)	Disc / Disc
	Front Brake	Dual Floating Disc / 3 Piston Calipers
	Rear Brake	Linked, Single Floating Disc / 2 Piston Caliper

Specifications may change with the addition of custom order options and / or accessories. Polaris Sales Inc. reserves the right without prior notice to discontinue at any time at its discretion any of the items herein or change specifications or designs without incurring any obligation to the customer.

© 2009 Polaris Sales Inc.

2008-2009 Vision Street / Vision Tour / 10th Anniversary / NSS Vision Specifications (cont.)

		2008 - 2009 VICTORY VISION Models
DRIVE SYSTEM	Transmission Type	Manual, 6 Speed Overdrive, Constant Mesh
	Clutch Type	Wet, Multi-Plate Diaphragm Spring
	Primary Drive Type	Wet, Gear Drive w/ Torque Compensator
	Primary Reduction Ratio	1.5:1
	Final Drive Type / Belt Width / Final Drive Ratio	Carbon Fiber Reinforced Belt / 28mm / 2.12:1
	Gear Shift Pattern	1 Down, 5 Up
	Internal Gear Ratios 1st	3.15:1
	2nd	2.03:1
	3rd	1.53:1
	4th	1.24:1
	5th	1:1
	6th	.84:1
SUSPENSION	Front Wheel (Size / Type)	Cast or Billet / 3.00 x 18 (inch)
	Rear Wheel (Size / Type)	Cast or Billet 5.00 x 16 (inch)
	Front Tire	Dunlop Elite 3 (130/70R18) 63H Radial
	Rear Tire	Dunlop Elite 3 (180/60R16) 80H Radial
	Minimum Tread Depth	.063 in. (1.6mm)
	Front Type	45mm (TYPE 1) Telescopic Cartridge Fork
	Front Travel	5.1 in. (13 cm)
	Front Tube Diameter	43 mm (1.7 in.)
	Rear Shock Type	Single, Monotube Air Adjustable Shock
	Rear Swingarm Type	Cast Aluminum with Rising Rate Linkage
	Rear Travel (inches)	4.7 in (12 cm)
LIGHTS	Headlamp	High / Low: H-4 55/60W
	Driving Lamp (Std / HID)	HS1 35W / D1R 35W
	Turn / Brake / Tail Light	3157 27 / 9w
	License Plate / Trunk Running Light	W5W 5w
	Courtesy Light (Trunk, if equipped)	6411 10W
	Fog Lamp (If equipped)	35W
	Alternator / Battery	50 amp max output / 12V 18AH 310 CCA
FUSES	**Left Fuse Panel**	
	Ignition	10 amp circuit breaker
	Headlight	20 amp circuit breaker
	Gauges	5 amp fuse
	Radio	25 amp fuse
	Secondary Lighting	20 amp fuse
	Horn	20 amp fuse
	Turn Signal / Brake	20 amp fuse
	Right Fuse Panel	
	Engine	15 amp circuit breaker
	Windshield (Electric)	20 amp fuse
	Fuel Pump / Ignition Coil	15 amp fuse
	Chassis	20 amp fuse

Specifications may change with the addition of custom order options and / or accessories. Polaris Sales Inc. reserves the right without prior notice to discontinue at any time at its discretion any of the items herein or change specifications or designs without incurring any obligation to the customer.

© 2009 Polaris Sales Inc.

2010 VICTORY VISION Tour / Tour ABS / 8-Ball / NSS Vision Specifications

		VICTORY VISION TOUR / TOUR ABS	VICTORY VISION 8-BALL / NESS
CAPACITIES & DIMENSIONS	Oil Capacity	5.0 Qt. (4.75 ltr) (Approximately 4.5 qts. or 4.25 ltr at oil & filter change)	
	Fuel Capacity	6.0 US Gal (22.7 ltr) (1.0 U.S. gal / 3.8 ltr reserve)	
	Fuel Type / Octane Minimum	Premium Unleaded / 91 Octane	
	Dry Weight	TOUR: 852 lbs (387 kg) TOUR ABS: 869 lbs (394 kg)	8-BALL / NESS: 800 lbs (363 kg)
	Wet Weight	TOUR: 892 lbs (405 kg) TOUR ABS: 909 lbs (412 kg)	8-BALL / NSS: 840 lbs (381 kg)
	Gross Vehicle Weight Rating (GVWR)	1414 lbs. (641 kg)	
	Gross Axle Weight Rating FRONT AXLE	513 lbs. (233 kg)	
	Gross Axle Weight Rating REAR AXLE	901 lbs. (409 kg)	
	Maximum Load (See page 1.9 for more information)	TOUR: 522 lbs (237 kg) TOUR ABS: 505 lbs (229 kg)	8-BALL / NESS: 574 lbs (260 kg)
	Overall Length	104.9 in (266.5 cm)	8-Ball / NESS: 103.5 in (262.9 cm)
	Overall Width	45.2 in (114.7 cm)	
	Overall Height	58.5 (148.5 cm)	56.2 (142.7 cm)
	Seat Height	26.5 in (67.3 cm)	24.5 in (62.2 cm)
	Ground Clearance	5.8 in (14.8 cm)	4.8 in (12.2 cm)
	Passenger Capacity	1	1
	Wheelbase	65.7 in (166.9 cm)	
	Rake / Trail	29 Degrees / 5.4 in. (13.7 cm)	
ENGINE	Engine Type	Victory Freedom® V-Twin	
	Engine Configuration	50° SOHC V-Twin 4 Stroke	
	Engine Displacement	1731cc / 106 cubic inch 6 speed (106 / 6 engine)	
	Engine Cooling System	Air / Oil	
	Compression Ratio	9.4:1	
	Compression Pressure	210 - 225 psi (1448 - 1551 kPa)	
	Valve Train	4 Valves per cylinder. Hydraulic Lifters & Cam Chain Adjusters (No Adjustment)	
	Bore x Stroke	101 x 108 mm	
	Starter	Electric / Direct Drive	
	Fuel System / Throttle Body Bore Size	Closed Loop Sequential Electronic Fuel Injection / Dual Bore 45 mm	
	Exhaust System Type	2-1-2 Split Dual Exhaust With Crossover	
	Lubrication System	Wet Sump	
	Spark Plug Type (Gap)	NGK DCPR6E (.032 in. / .8 mm)	
	Dry Weight (Engine Approximate)	265 lbs. (120 Kg)	
BRAKES	Brake Type (Front / Rear)	Disc / Disc	
	Front Brake	Dual Floating Disc / 3 Piston Calipers (2010 - ABS if equipped)	
	Rear Brake	Linked, Single Floating Disc / 2 Piston Caliper (2010 - ABS if equipped)	

Specifications may change with the addition of custom order options and / or accessories. Polaris Sales Inc. reserves the right without prior notice to discontinue at any time at its discretion any of the items herein or change specifications or designs without incurring any obligation to the customer.

© 2009 Polaris Sales Inc.

2010 VICTORY VISION Tour / Tour ABS / 8-Ball / NSS Vision Specifications (cont.)

		2010 VICTORY VISION Models
DRIVE SYSTEM	Transmission Type	6 Speed Constant Mesh With True Overdrive
	Clutch Type	Wet, Multi-Plate Diaphragm Spring
	Primary Drive Type	Wet, Gear Drive w/ Torque Compensator
	Primary Reduction Ratio	1.5:1
	Final Drive Type / Belt Width / Final Drive Ratio	Carbon Fiber Reinforced Belt / 28mm / 2.12:1
	Gear Shift Pattern	1 Down, 5 Up
	Internal Gear Ratios 1st	3.15:1
	2nd	2.03:1
	3rd	1.53:1
	4th	1.24:1
	5th	1:1
	6th	.84:1
	Reverse	2009-2010 Only. Motorized Reverse (if equipped) See Electrical Chapter 19
SUSPENSION	Front Wheel (Type / Size)	Cast or Billet / 3.00 x 18 (inch)
	Rear Wheel (Type / Size)	Cast or Billet / 5.00 x 16 (inch)
	Front Tire	Dunlop Elite 3 (130/70R18) 63H Radial
	Rear Tire	Dunlop Elite 3 (180/60R16) 80H Radial
	Minimum Tread Depth	.063 in. (1.6mm)
	Front Type	45mm (TYPE 1) or (46MM TYPE 2) Conventional Telescopic Cartridge Fork
	Front Travel	5.1 in. (13 cm)
	Front Tube Diameter	46 mm (1.81 in.)
	Rear Shock Type	Single, Monotube Air Adjustable Shock
	Rear Swingarm Type	Cast Aluminum with Rising Rate Linkage
	Rear Travel (inches)	4.7 in (12 cm) [8-Ball & Ness - 3.5 in. (9.0 cm)]
LIGHTS	Headlamp	High / Low: H-4 55/60W
	Driving Lamp (Std / HID)	HS1 35W / D1R 35W
	Turn / Brake / Tail Light	3157 27/ 7w
	License Plate / Trunk Running Light	W5W 5w
	Courtesy Light (Trunk, if equipped)	6411 10W
	Fog Lamp (If equipped)	35W
	Alternator / Battery	50 amp max output / 12V 18AH 310 CCA / Yuasa YTX20HL
FUSES	**Left Fuse Box**	
	Ignition	10 amp circuit breaker
	Headlight	20 amp circuit breaker
	Gauges (Instruments)	5 amp fuse
	Radio	25 amp fuse
	Secondary Lighting	20 amp fuse
	Horn	20 amp fuse
	Turn Signal / Brake	20 amp fuse
	Right Fuse Box	
	Engine	15 amp circuit breaker
	Windshield (Electric)	20 amp fuse
	Fuel Pump / Ignition Coil	15 amp fuse
	Chassis	20 amp fuse
	ABS Fuse (if equipped)	(2) 30A

Specifications may change with the addition of custom order options and / or accessories. Polaris Sales Inc. reserves the right without prior notice to discontinue at any time at its discretion any of the items herein or change specifications or designs without incurring any obligation to the customer.

© 2009 Polaris Sales Inc.

VEHICLE LOADING

GROSS VEHICLE WEIGHT RATING (GVWR)

WARNING

Exceeding the gross vehicle weight rating of your motorcycle can reduce stability and handling and could cause loss of control. NEVER exceed the gross vehicle weight rating of your motorcycle.

The *maximum load capacity* of your motorcycle is the maximum weight you may add to your motorcycle *without exceeding the GVWR*. This capacity is determined by calculating the difference between your motorcycle's gross vehicle weight rating and the wet weight.

Refer to the specification section of this manual or the Manufacturing Information / VIN label on the motorcycle frame for model-specific information. Refer to Information label section in this manual (page 1.11) for location on the motorcycle.

When determining the weight you will be adding to your motorcycle, and to ensure you do not exceed the maximum load capacity, include the following:

- operator body weight
- passenger body weight
- weight of all riders' apparel and items in or on apparel
- weight of any accessories *and their contents*
- weight of any additional cargo on the motorcycle

© 2009 Polaris Sales Inc.

VEHICLE INFORMATION

VEHICLE IDENTIFICATION NUMBER (VIN)

See “VIN NUMBER / MANUFACTURER LABEL” on page 1.11. for location on the vehicle.

SAE-assigned
World Manufacturing Identifier

Chassis:
See chassis designators listed under Model Number (below)

Type:
B = Standard
C = Custom
D = Deluxe / Tour
S = Sport
W = ABS

Series:
A = Australia
C = Canada
D = Domestic (49 State)
E = Europe
L = California
U = United Kingdom

Serial Number

5VPSB36D0A2000000

Engine Size:
1 = 1507 cc
2 = 1634 cc
3 = 1731 cc

Engine HP:
6 = 78-94

Check Digit
(May be a number or a letter)

Model Year:
8 = 2008
9 = 2009
A = 2010

Plant/ Line Code

MODEL NUMBER

See “VIN NUMBER / MANUFACTURER LABEL” on page 1.11. for location on vehicle.

Chassis:
A = Vegas 8-Ball
B = Hammer 8-Ball
C = Kingpin
D = Cross Country
E = Cross Roads
H = Hammer
K = Kingpin Low, 2009
L = Vegas Low, 2010 Vegas
P = Kingpin 8-Ball
S = Victory Vision
V = Victory Vision 8-Ball
X = Jackpot

Engine Size:
1 = 1507 cc
2 = 1634 cc
3 = 1731 cc

Engine HP:
6 = 78-94

Series:
A = Australia
C = Canada
D = Domestic (49 State)
E = Europe
L = California
U = United Kingdom

P = Premium Model
(Premium package equipped as specified for model.

T = Top Premium Model
(Premium package and additional upgrades as specified for model)
Example: 2010 - T designates ABS

V10SD36DAP

VICTORY

Model Year:
08 = 2008
09 = 2009
10 = 2010

Type:
B = Standard
C = Custom
D = Deluxe / Tour
S = Sport
W = ABS

Color Indicator

© 2009 Polaris Sales Inc.

VIN NUMBER / MANUFACTURER LABEL

The Vehicle Identification Number (VIN) is stamped into the right side of the frame near the steering head (A), and printed on the Manufacturer Information Decal located under the rear console cover on the frame (B).

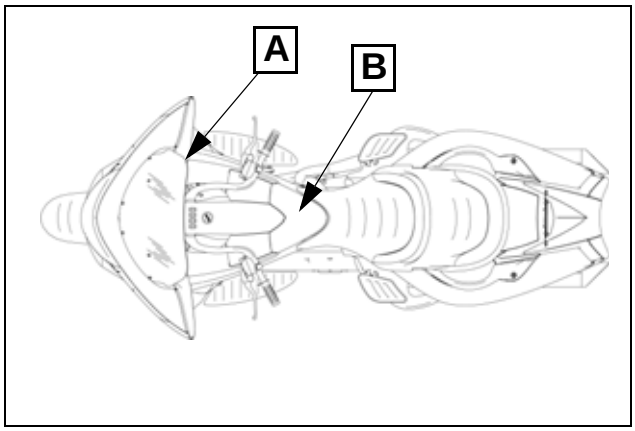

The Manufacturer Information Decal also includes the following information:

Gross Vehicle Weight Rating (GVWR)

Gross Axle Weight Rating (GAWR)

Date of manufacture

ENGINE NUMBER LOCATION

The engine number (C) is stamped into the right crankcase boss. The stamping identifies the engine model and serial number.

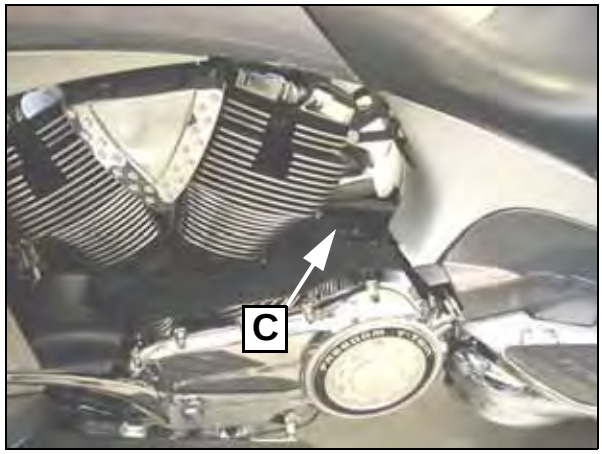

VECI / NECI / TIRE INFORMATION LABELS

The Vehicle Emission Control Information (VECI), Noise Emission Control Information (NECI), and the Tire Information labels (2008 & 2009 models) are located in the left saddlebag and on the bag door (D).

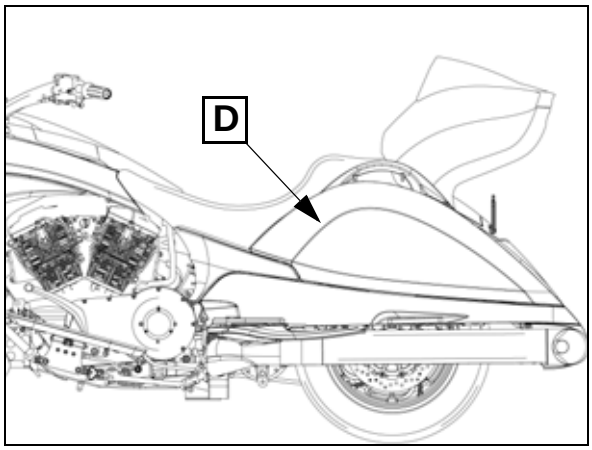

KEY IDENTIFICATION NUMBER

The key identification number (E) is stamped on a tag attached to the key ring. If the key and the identification number are lost or misplaced, the lock set must be replaced.

Key blanks are available from Victory. Locksmiths familiar with the motorcycle industry will be able to cut a replacement key with the I.D. number and a Victory key blank.

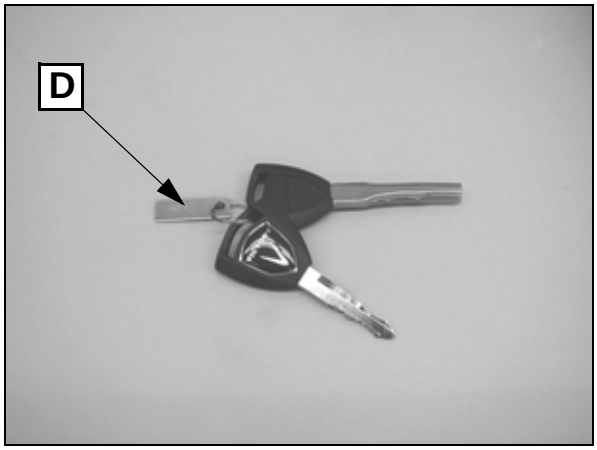

© 2009 Polaris Sales Inc.

PUBLICATIONS & TECHNICAL LITERATURE

PUBLICATION PART NUMBERS

Some Victory publications, such as Owner's Manuals and Parts Books are available on-line and can be downloaded from the Victory motorcycles web site (http://www.polarisindustries.com/en-us/Victory/). Click on the *Riders* pull down menu and select *Manuals and Parts*.

Service Manuals can be purchased through any authorized Victory motorcycle dealer. The part numbers are listed in the following table. Some manuals are available for purchase on-line at *www.purepolaris.com*.

VICTORY SERVICE MANUAL PART NUMBERS	
2002 - 2006 Classic & Touring Cruiser	9919632
2003-2006 Vegas® / Kingpin® / Vegas 8-Ball® / Ness Signature Series Vegas® & Kingpin®	9920337
2005-2006 Hammer® / 2006 Vegas Jackpot®	9920340
2007 Vegas® / Vegas 8-Ball® / Kingpin® / Kingpin Tour®	9920837
2007 Hammer® / Hammer® S / Vegas Jackpot® / Ness Signature Series Vegas Jackpot®	9920838
2008 Vegas® / Vegas 8-Ball® / Vegas Low™ / Kingpin® / Kingpin Tour® / Kingpin 8-Ball®	9921242
2008 Hammer® / Hammer® S / Vegas Jackpot® / Ness Signature Series Vegas Jackpot®	9921247
2009 - 2010 Vegas®, Kingpin®, Hammer® / Vegas Jackpot®	9922432
2010 Victory Cross Roads™ & Victory Cross Country™	9922647

MATERIAL SAFETY DATA SHEET (MSDS)

To review or print a Material Safety Data Sheet for Victory maintenance products, chemicals or lubricants:

DEALERS: visit www.polarisdealers.com / news forms & links / pure polaris OR contact Dealer Support

NON-DEALERS: please contact Polaris Customer Service at: 1-888-704-5290 (French speaking 1-204-925-7100)

© 2009 Polaris Sales Inc.

REFINISHING

VICTORY TOUCH-UP & REFINISHING PAINT

Service Paint products are available in three different sizes and applications. Some paint colors require up to 3 components to create a color. Prices subject to change without notice. Dealer is responsible for freight on paint and paint products.

.6 ounce bottle: (Order Multiple of 2) For brush touch-up of small nicks.

10 ounce aerosol can: (Order Multiple of 2)
Apply light even coats for best results. Recoat time is from 30-60 minutes or after 4 days of drying to prevent lifting.

Quarts: (Sold as each)
For repaint of properly prepared plastic components or metal substrates.
Paint is a high quality acrylic urethane manufactured by U.S. Paint.
Mix as indicated on back of paint can. Paint can be recoated after paint is tack free or has “flashed off”.
Paint finish may be wet sanded and buffed after coating has cured.

How to order:
Authorized Victory Dealers only. Place your order via the dealer web site at:
www.polarisdealers.com / News Forms & Links / Pure Polaris

NOTE: There will be a 25% service fee charged for all returns. Polaris dealer will be responsible for return freight

VICTORY DETAIL & FINISH RESTORER KITS AND PRODUCTS

A Detail Kit (polish, wax, and dressing) and a Restore Kit (polish, and swirl / scuff remover) is available from the Victory parts department for painted surface protection and to remove minor surface imperfections.

Visit **www.purevictorypolishes.com** for a complete list of genuine Pure Victory detailing products.

Detail Kit: 2872195 Includes Non-Abrasive Wash, Swirl Remover / Polish, Polywax Final Finish, Vinyl / Rubber Protector, Applicator and Cloth.

Restore / Polish: 2872192 (12 oz. Aerosol)

PAINTING TERMS

The following terms describe the general operations referred to in the Paint Color Code chart on page 1.16.

E-Coat (Factory Applied): This material is used as a rust protection. It is also used to form a bond between bare metal and the primer or base coat. Full-hide colors (such as black) do not require primer.

Primer: Primer is necessary when applying some colors such as Flame Yellow, Sonic Blue, Solar Red, etc. The purpose of a primer coat is to prevent bleed-through or transparency in subsequent color coats.

Base Coat: A color paint layer applied under another color or under the clear topcoat to improve color matching and consistency.

Top Coat: Outermost layer of paint or clear coat.

© 2009 Polaris Sales Inc.

PAINT COLORS BY MODEL

The 8th Digit of the model number (either a C, D, L, or U) designates the Series:
(C = CANADA, D = Domestic (49 State), E = Europe, L = CALIFORNIA, and U = United Kingdom.

2008-2010 models - the 9th letter of the model number designates the color. “P” in the 10th position indicates Premium model. Premium models were equipped with a comfort package (heated seat, grips, etc.) and premium lighting (HID headlamp).

2009 models, a “T” or “C” in the 10th position indicates models equipped with “P” premium features plus chrome package and additional audio gear.

2010 models, a “T” in the 10th position indicates models equipped with Anti-Lock Braking System (ABS).

NOTE: Refer to page 1.16 for paint color code. Detailed paint ordering information is available on the dealer web site (www.polarisdealers.com) under News, Forms & Links / Pure Polaris / Paint Codes & Part Numbers. Refer to page 1.10 for model number descriptor.

VICTORY VISION STREET™ MODEL YEAR 2008	
Model Number	**Model**
V08S136	VICTORY VISION Street - Feature / Option
V08SB36CA, CAP, DA, DAP, LA, LAP	VICTORY VISION Street, Solid Black
V08SB36CC, CCP, DC, DCP, LC, LCP	VICTORY VISION Street, Midnight Cherry
V08SB36CD, CDP, DD, DDP, LD, LDP	VICTORY VISION Street, Supersteel Gray
VICTORY VISION TOUR™ MODEL YEAR 2008	
V08S236	VICTORY VISION Tour - Feature / Option
V08SD36CA, CAP, CAT, DA, DAP, DAT, LA, LAP, LAT	VICTORY VISION Tour, Solid Black
V08SD36CC, CCP, CCT, DC, DCP, DCT, LC, LCP, LCT	VICTORY VISION Tour, Midnight Cherry
V08SD36CD, CDP, CDT, DD, DDP, DDT, LD, LDP, LDT	VICTORY VISION Tour, Supersteel Gray
VICTORY VISION STREET™ MODEL YEAR 2009	
V09SB36CAP, DA, DAP, LA, LAP	VICTORY VISION Street, Solid Black
V09SB36DC, DCP, LCP	VICTORY VISION Street, Blue Ice
V09SB36CSP, DS, DSP, LSP	VICTORY VISION Street, Midnight Cherry
VICTORY VISION TOUR™ MODEL YEAR 2009	
V09SD36CA, CAC, CAP, DA, DAC, DAP, LAC, LAP	VICTORY VISION Tour, Solid Black
V09SD36CCC, CCP, DC, DCC, DCP, LC, LCP	VICTORY VISION Tour, Blue Ice
V09SD36CSC, CSP, DS, DSC, DSP, LS, LSC, LSP	VICTORY VISION Tour, Midnight Cherry
VICTORY VISION TOUR 10th ANNIVERSARY™ MODEL YEAR 2009	
V09SZ36CT, DT, LT	VICTORY VISION Tour, Antares Red w/ Black / Gold Pinstripe
NESS SIGNATURE SERIES VICTORY VISION™ MODEL YEAR 2009	
V09SC36CM, DM, LM	NSS VICTORY VISION Street, Solid Black

© 2009 Polaris Sales Inc.

PAINT COLORS BY MODEL (Cont.)

VICTORY VISION TOUR™ MODEL YEAR 2010	
V10SD36CGP, DGP, LGP	VICTORY VISION Tour, Solid Pearl White
V10SD36CPP, DPP, LPP	VICTORY VISION Tour, Ocean Blue/Sandstone Metallic
VICTORY VISION TOUR™ ABS MODEL YEAR 2010	
V10SW36CAP, DAP, LAP, UAP	VICTORY VISION Tour, Solid Black
V10SW36CPP, DPP, LPP, UPP	VICTORY VISION Tour, Ocean Blue/Sandstone Metallic
VICTORY VISION 8-BALL™ MODEL YEAR 2010	
V10VB36CA, DA, LA,	VICTORY VISION 8-Ball, Solid Black
NESS SIGNATURE SERIES VICTORY VISION™ MODEL YEAR 2010	
V10SC36CM, DM, LM	NSS VICTORY VISION Street, Ness Custom

© 2009 Polaris Sales Inc.

PAINT COLOR CODES

For current information Victory Dealers can go to www.polarisdealers.com/News, Forms, and Links. Enter PAINT CODES in the search box.

PAINT COLOR: 2008 - 2010	PAINT CODE	NOTES
Cobalt Blue	P-1278	P-574 Cobalt Blue / P-585 Tinted Black (1st Overlay) / P-500 Graphics
Blue Ice Metallic	P-1280	P-564 Blue Ice Metallic / P-500 Graphics
Pearl White	P-352	
Vogue Silver	P-354	
Turbo Silver	P-445	Paint kits require base coat with a topcoat of Clear Metallic (CM)
Flat Black	P-463	
Nuclear Sunset	P-493	
Victory Graphics	P-500	
Super Graphite	P-509	
Orange Crush	P-516	
Clear Pearl	P-519	
Sunset Red	P-520	
Boardwalk Blue	P-524	Requires P-519 Clear Pearl Topcoat
Ness Metallic Purple	P-543	
Supersteel Gray	P-553	Requires P-519 Clear Pearl Topcoat
Midnight Cherry	P-554	
Sands Metallic	P-555	
Anodized Aluminum	P-565	
Lucky Lime	P-568	
Ocean Blue Metallic	P-576	
Sandstone Metallic	P-576	
Tinted Black	P-585	
Sunset Red / Graphics	P-1258	P520 / P500
Nuclear Sunset / Graphics	P-1266	P493 / P500
Pearl White / Graphics	P-1272	P352 / P500
Orange Crush / Graphics	P-1276	P516 / P500
Black / Ness Graphics	P-1278	
Ocean Blue / Suede Metallic	P-1284	
Midnight Cherry / Suede Metallic	P-1289	
Metallic Flake Additive	METALLIC	Add vial of flake to quart of clear base
Silver Undercoater	SU	Base coat only
Antares Red Undercoater	RU	Base coat only
Clear	C	
Clear Metallic	CM	Clear with metal flake added
Clear Pearl	CP	Clear with pearl flake added
UNDERCOATERS (Base Coat Only)	WU, OWU, PWU, VVU	WU=White Undercoater; OWU=Off-White Undercoater; PWU=Pearl White Undercoater; VVU=Victory Violet Undercoater

© 2009 Polaris Sales Inc.

BREAK IN PERIOD

BREAK-IN PROCEDURE

There is never a more important period in the life of a new Victory motorcycle than the period between zero and 500 miles (805 km). A Victory motorcycle is manufactured using the best possible materials and manufacturing techniques, but the final machining process is the break-in. During break-in period, many parts in the engine wear and polish to correct operating clearances. During this time, the operator should:

- Avoid prolonged full throttle operation.
- Avoid operation which might result in excessive heating of the engine.

The general break-in guidelines are as follows:

BREAK-IN GUIDELINES		
Miles/km	**Throttle Position**	**Notes**
0-90 miles	0-1/3	Avoid prolonged operation above 1/3 throttle. Stop engine and let it cool following every hour of operation. Vary speed of motorcycle. Do not operate machine at one set throttle position.
90-300 miles	0-1/2	Avoid prolonged operation above 1/2 throttle. Stop engine and let it cool following every hour of operation. Vary speed of the motorcycle. Do not operate machine at one set throttle position.
300-500 miles	0-3/4	Avoid cruising speeds above 3/4 throttle.
500 miles	**Replace the engine oil and engine oil filter.** Perform 500 mile service on the machine. See chapter 2 for more information.	
500 +	Avoid prolonged full-throttle operation. Vary the engine speed occasionally. Follow the pre-ride inspection outlined in the owner's manual.	

© 2009 Polaris Sales Inc.

EMISSIONS

EMISSION CONTROL SYSTEMS

The U.S. Environmental Protection Agency and California Air Resources Board (CARB) require manufacturers to certify that their motorcycles comply with applicable exhaust emissions standards during their useful life, and that motorcycles built after January 1, 1983 comply with applicable noise emission standards for one year or 6,000 km (3,730 mi) after the time of sale to the ultimate purchaser, when operated and maintained according to the instructions provided.

EMISSION SOURCES

An internal combustion engine produces carbon monoxide and hydrocarbons during operation. Hydrocarbons must be controlled because under some conditions hydrocarbons react with sunlight to produce photochemical smog. Carbon monoxide must be controlled because it is toxic.

EXHAUST EMISSION CONTROL

Victory Motorcycles have an electronic engine management system which controls fuel delivery and ignition timing to control hydrocarbon and carbon monoxide emissions. Follow the Periodic Maintenance Interval Table on page 2.5 and inspect the emission control system as outlined in this manual. No adjustments can be made to the EEC system.

NOISE EMISSION CONTROL SYSTEM

Tampering with Noise Control Systems is Prohibited. Federal law prohibits the following acts or causing thereof:

1. The removal or rendering inoperative by any person other than for purposes of maintenance, repair or replacement, any device or element of design incorporated into the motorcycle for the purpose of noise control prior to its sale or delivery to the ultimate purchaser or while it is in use, or
2. The use of the motorcycle after such device or element of design has been removed or rendered inoperative.

Among those acts presumed to constitute tampering are the acts listed below:

1. Removal of, or puncturing the muffler, baffles, header pipes or any other component which conducts exhaust gases.
2. Removal or puncturing of any part of the intake system.
3. Lack of proper maintenance.
4. Replacing any moving part of the motorcycle or parts of the exhaust / intake system with parts other than those specified by the manufacturer.

CRANKCASE EMISSION CONTROL

The crankcase emission control system is comprised of a closed system that routes crankcase emissions through the air cleaner into the combustion chamber.

EVAPORATIVE EMISSION CONTROL

California models are equipped with an Evaporative Emissions Canister (A). Activated charcoal inside the canister temporarily stores fuel vapor from the fuel tank vent system. The Electronic Control Module (ECM) opens a canister purge valve that connects the charcoal canister to the intake tract (when conditions are correct) to purge the canister of vapors absorbed by the charcoal. Refer to Chapter 5 for system diagram and Chapter 2 for system maintenance.

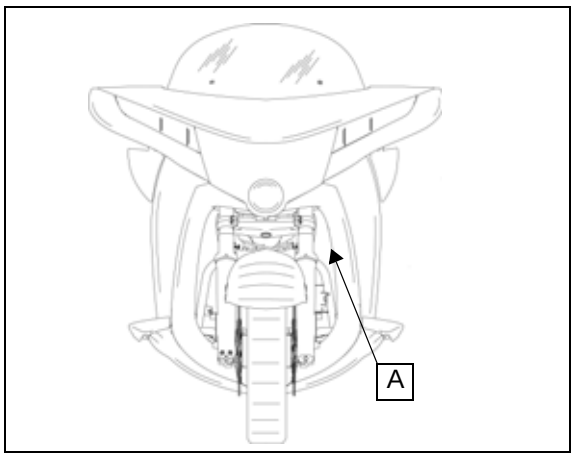

© 2009 Polaris Sales Inc.

SPECIAL SERVICE TOOLS

GENERAL / PRECISION MEASURING TOOLS

TOOL	PART NUMBER
Bearing & Seal Driver Set	PV-43558
Bodywork Removal Tool Set	PV-49955
Bore Gauge Set, 50-100mm	PV-3017
Decal, Service Bulletin Completion	7170107 (Order from Victory Parts Dept.)
Dial Caliper (Metric, 0-150mm)	PV-26900-7
Dial Caliper (Electronic Conversion. English 0-6” / Metric 0-150mm)	PV-39776
Dial Indicator, Adjustable (Metric. 10mm travel)	PV-26900-12
Dial Indicator Stand, Flexible. Magnetic Base	PV-34481
Engine Ear Listening Device	PV-39565
Feeler Gauge Set	PV-26900-8 or PV-26900-9
Outside Micrometer (0-25 & 25-50mm)	PV-3006, PV-3007
Outside Micrometer Set (0-100mm)	PV-3009
Small Hole Gauge Set	Commercially Available
Straight Edge, Precision	PV-34673
Surface Plate	Commercially Available
Telescoping Gauge Set	PU-45423
Torque Wrench (3/8” Drive 0-50 in-lb. beam type)	PV-43543
Torque Wrench (1/2” Drive 0-150 lb-ft. beam type)	PV-43552
Torque Wrench (3/8” Drive 15-100 lb-ft. click type)	PV-43564

TUNE UP & MAINTENANCE TOOLS

TOOL	PART NUMBER
Belt Tension Gauge	PV-43532
Belt Tension - Sonic Tension Meter	Commercially available
Cylinder Leakdown Tester	PV-35667-A
Compression Gauge Set	PV-33223
Oil Pressure Gauge Set	PV-43531
Vacuum Brake Bleeder	PV-50204

ELECTRICAL TOOLS

TOOL	PART NUMBER
Ammeter Inductive Clamp for Fluke 73™ Multimeter	PV-39617
Cruise Control Jumper Harness (Diagnostic) Kit (Not required on Vision)	PV-49358
Electrical Connector Test Adapter Kit	PV-43526
Inductive Timing Light	PV-43537
Multimeter, Fluke 73™	PV-43546

© 2009 Polaris Sales Inc.

ENGINE, CLUTCH, & TRANSMISSION TOOLS

TOOL	PART NUMBER
Clutch Shaft Bearing Support (for clutch shaft installation)	PV-47331
Crankcase Assembly Tool (Crankcase Installer)	PV-46299 (Must be used with PV-45030) and Adapter (Extension) PVX-47429
Crankcase Assembly Tool Adapter	PVX-47429
Crankshaft Bearing Protector	PV-47207
Crankshaft Rotation Tool	PV-48736
Crankcase Separator (Crankcase Removal)	PV-47332-A
Engine Hoist or Lift	Commercially Available
Engine Lock Tool	PV-43502-A
Engine Stand	Commercially Available
Exhaust Muffler Rotation Tool (All VICTORY VISION Models)	PV-49946
Flywheel Puller	PV-43533
Mainshaft (Clutch Shaft) Holder	PV-45028
Crankcase Installation Tool (Crankcase Assembly)	PV-46299 (Must be used with PV-45030)
Mainshaft (Output Shaft) Seal Installation Tool	PV-43505
Piston Ring Compressor (97mm +)	Includes PV-43570-1 Pliers, PV-43570-2 Band (3 5/8” to 3 7/8”)
Valve Spring Compressors (Adapter is PV-43513-A)	PV-1253 or PV-4019 (Quick Release)

STEERING & SUSPENSION TOOLS

TOOL	PART NUMBER
Blind Bearing Remover Set	PV-43551
Wheel Bearing Service Set	PV-49462
Fork Spring Compressor	PV-49463
Cartridge Shaft Extension (Hammer)	PV-47060 or PV-49453**
Cartridge Holder (Required for Hammer TYPE 2 KYB forks)	PV-49452
Damper Rod Holder (Jackpot)	PV-43517
Fork Oil Level Gauge	PV-59000-A
Fork Seal Driver 43mm, Inverted - Hammer TYPE 1 and TYPE 2	PV-47035
Fork Seal Driver, 43mm, Conventional (Jackpot)	PV-47036
Fork Seal Guide Tool, 43mm (Hammer, Jackpot)	PV-47037
Steering Bearing, Wheel Bearing Installation Set	PV-43515
Steering Stem Bearing Adjustment Socket	PV-43508
Steering Stem Bearing Spanner Wrench	PV-43509
Shock Absorber Pre-Load Adjustment Spanner	PV-46993
Shock Spring Compressor	PV-43571

PV-47060 Damper Rod Extension tool is for TYPE 1inverted (MARZ, Hammer / KP) forks only. PV-49453 works on ALL Victory cartridge forks including Type 1 and Type 2 (KYB) Vision forks.

© 2009 Polaris Sales Inc.

WHEEL & TIRE TOOLS

TOOL	PART NUMBER
Air Pressure Gauge	PV-48909 (Victory Air Pump & Gauge) Or Commercially Available Tire Pressure Gauge
Tire Bead Breaker (May be part of the tire removal equipment being used)	Commercially Available
Tire Mounting Lubricant	Commercially Available
Tire Removal Equipment	Commercially Available
Rim Protector	PV-43536
Wheel Balancing/Truing Stand	Commercially Available

FUEL SYSTEM & FUEL INJECTION TOOLS

TOOL	PART NUMBER
(See Chapter 5 for more information)	
Victory/Polaris Diagnostic Tool Kit	PU-46085-A
PU-46085-A (above) INCLUDES:	Digital Wrench Software: PU-48731
	Standard Interface Cable: PU-47151
	Victory Adapter: PV-46085-2
	SmartLink Interface Kit: PU-47471
Fuel Pressure Gauge	PU-43506-A
Fuel Pressure Gauge Adapter	PV-48656
Fluke 73 Digital Multi-Meter or Fluke 77 DMM	PV-48656 (Fluke 77 - PV-43568)
Electrical Connector Test Adapter Kit	PV-43526
Laptop Computer (Refer to diagnostic software user manual or HELP section for minimum specifications	Commercially Available

TOOL ORDERING INFORMATION

Order Special Service Tools from SPX Corporation (Phone 800-328-6657 / FAX 586-578-7375) or use the link on the Victory Dealer Web site.

If you are not a Victory dealer use the phone or FAX number listed above or visit http://polaris.spx.com/

© 2009 Polaris Sales Inc.

TRANSPORTING, ELEVATING, AND SECURING THE MOTORCYCLE

GENERAL GUIDELINES

WARNING

Care should be taken to be sure the motorcycle will not tip or fall while elevated. Severe personal injury or death could occur if the motorcycle tips or falls.

If you must transport the motorcycle or secure it to a lift table:

- Use a truck, trailer, or lift table designed or equipped properly for motorcycles. Review truck, trailer or lift manufacturer's recommendations.
- Do not tow the motorcycle with another vehicle, as towing will impair the motorcycle's steering and handling, which can cause a loss of control.
- Position and restrain the motorcycle so it remains upright on the truck, trailer, or lift table as gasoline may leak out of the fuel tank vent if the motorcycle is transported at extreme angles. Gasoline is a fire hazard and it can also damage the motorcycle's finish.
- Do not restrain the motorcycle using the handlebars. Loosen the turn signals and slide them up the fork tube as shown, enough to make room for a soft tie-down extension strap (no buckles). Place tie downs around the lower triple clamp as shown, around the fork tube below the turn signal mount and above the lower triple clamp.
- Secure the rear of the motorcycle with tiedowns around the swingarm, being careful to avoid brake lines, exhaust, drive belt, or drive belt guards.
- The motorcycle can be elevated by placing a stable, flat platform jack or lift mechanism on a firm flat surface and lifting under the engine crankcase. The platform should be a *minimum* 12 inches square, and clear of any components under the motorcycle. DO NOT attempt to lift the motorcycle without properly securing it with straps.

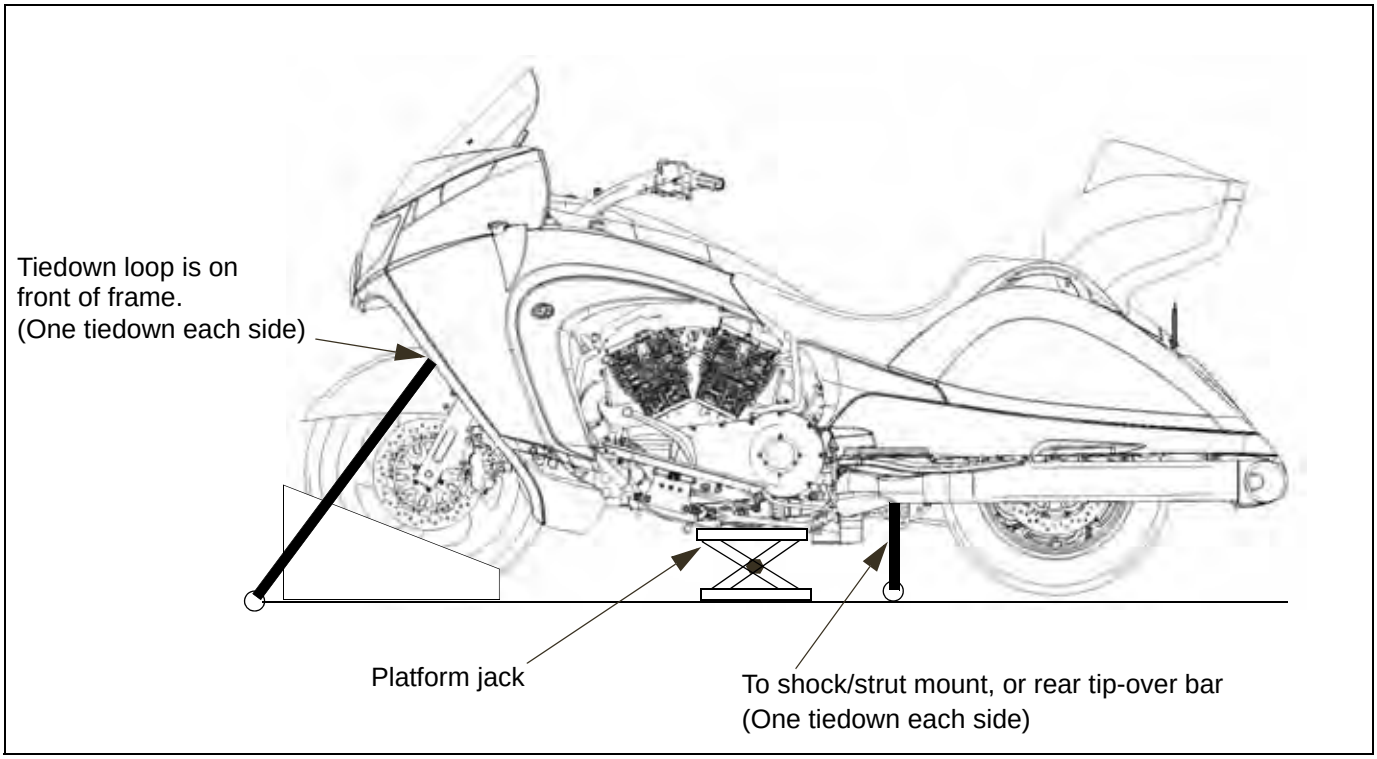

© 2009 Polaris Sales Inc.

INSTRUMENTATION / CONTROLS

IGNITION KEY

The ignition key operates the ignition switch, fuel door (page 1.32) bag locks (page 1.33) and trunk lock (if equipped, page 1.33). Key position and function is described on the following pages.

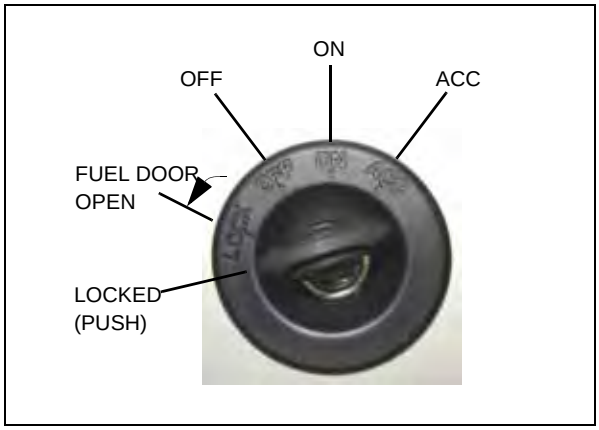

IGNITION SWITCH

The ignition switch has 4 positions - OFF, ON, ACC, and LOCK. The switch is also used to open or lock the fuel door on the right side of the console, and to lock the glove compartment on the left side of the console. See table below for switch function.

Ignition Switch Function

OFF	No electrical circuits are active. Ignition key can be removed from the switch.
ON	All electrical circuits are energized. The ignition key cannot be removed from the switch. The headlamp (2008 only) taillight, running lights, radio, and instrument lights illuminate. Note: To energize headlamp circuit on 2009 - 2010 models, tap starter button or start engine. ALL - With engine stop/run switch set to the RUN position you can start the engine, activate emergency flashers and turn signals.
ACC	Power is supplied to accessory circuits, radio, instruments (fuel gauge, etc.), brake light, turn signals (2008 only) windshield motor, horn, and hazard (flasher) circuit. Headlamp and tail lamps are OFF, and turn signals inactive (2009-2010 models - the ECM must be powered up for turn signal operation). The key can be removed. Use ACC position whenever engine does not need to be running to reduce electrical load and conserve battery power.
LOCK	With the key in the LOCK position, no power is delivered to electrical circuits. The steering, fuel door, and glove compartment are locked. To lock the motorcycle, turn the handlebars fully left. With the key in the OFF position, push the key down, then rotate the key counter- clockwise (left) to the LOCK position. The ignition key can then be removed.
FUEL DOOR	See “FUEL DOOR” on page 1.32.

© 2009 Polaris Sales Inc.

INSTRUMENT CLUSTER

The instrument cluster includes the items listed on the following pages. The MODE button (page 1.28) is used to toggle through various functions, change unit display (mph to kph) and to reset all functions except the odometer and fuel range.

SPEEDOMETER

(1) The speedometer displays current motorcycle speed in miles per hour (mph) or kilometers per hour (kph) (international). To change display units, see page 1.26.

(1a) The light sensor port is located on the speedometer face.

TACHOMETER

(2) The tach displays current engine speed in revolutions per minute (RPM). A red line on the face indicates maximum safe engine RPM.

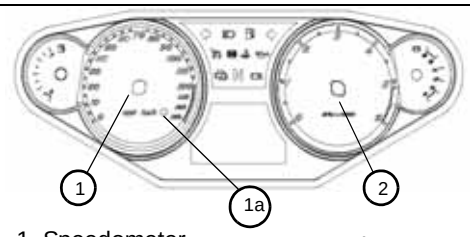

1. Speedometer
2. Tachometer
1a. Light Sensor

FUEL GAUGE

(3) The fuel gauge operates when the key is in the ON or ACC position. For most accurate readings, sit on the motorcycle and bring it to an upright position. To change fuel units (English / Metric) on the Information Display, see page 1.26.

VOLT METER

(4) The volt meter displays battery voltage being supplied to main electrical circuits when the key is in the ON position.

The meter will display approximate battery voltage when the key is ON without the engine running. With the engine running, the meter will display approximate battery charging voltage.

3. Fuel Gauge
4. Volt Meter

INDICATOR LAMP DISPLAY

(5) The indicator lamps are located on the upper display in the center of the instrument panel. See the following pages for a description of each and its function.

INFORMATION DISPLAY

(6) The information display, located below the indicator display, is a multi-function LCD unit. This panel will display the time, gear position, ambient temperature, mileage (either trip or total vehicle mileage), fuel range, average MPG, current fuel economy, trip time, and other trip information as selected by the MODE button (page 1.28). See the individual feature described in this chapter for more information. To change the unit display (U.S. to Metric) see page 1.26.

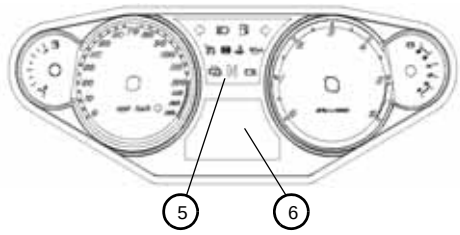

5. Indicator Lamp Display
6. Information Display

© 2009 Polaris Sales Inc.

CLOCK

(1) The clock is displayed with the key in the ON or ACC position. To change from 12 hour clock to 24 hour clock, see page 1.26.

To set the clock:

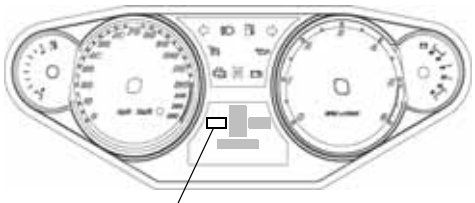

1. Clock

- Turn key to ON or ACC.
- Use the MODE button (page 1.28) to toggle the display to the **ODOMETER**.
- Press and *hold* the MODE button until the hour segment flashes, then release the button.
- With the hour flashing, tap the MODE button to advance the hour setting until the correct hour is displayed.
- Press and *hold* the MODE button until the 10-minute segment flashes, then release the button.
- Tap the MODE button to advance setting until the correct 10-minute digit is displayed.
- Press and *hold* the MODE button until the single minute segment flashes, then release the button. Tap the Mode button until single minute is correct, then press and *hold* MODE to save the current time and exit clock set mode.
- Turn the key OFF. The clock is set until the battery is disconnected or discharged.

TRIP INFORMATION

Average speed, average fuel economy, and a trip timer are displayed individually using the MODE button. *Average fuel economy data is most accurate when taken over multiple trips or multiple tanks of fuel.*

To RESET the above items, tap MODE button until desired data item is displayed, then press and HOLD the MODE button until the item resets.

The Trip Timer accumulates time only when the ignition switch is in the ON position.

GEAR POSITION

(2) The number of the current transmission gear is displayed with the key in the ON position and the Stop/Run switch in Run. The letter “N” is displayed in Neutral. “R” in Reverse (2009 10th Anniversary or Reverse Kit equipped).

TRIP ODOMETER

(3) The trip odometer shows total miles traveled since the trip odometer was reset. Use the MODE button (page 1.28) to toggle between odometer and trip meter. To reset the trip meter:

- Turn the key ON and toggle to the trip meter to TRIP 1 or 2.
- *Hold* the MODE button until the trip meter resets.
- To change from miles to kilometers see page 1.26.

TEMPERATURE

(4) Current ambient air temperature is displayed with the key in the ON or ACC position. The ambient temperature sensor is located behind the left rear view mirror.

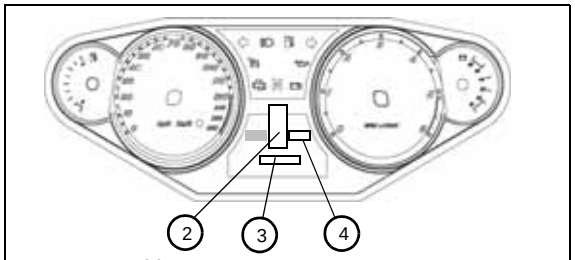

2. Gear Position
3. Trip Odometer
4. Ambient (Outside Air) Temperature

ODOMETER

(5) The odometer displays total mileage of the vehicle in miles or kilometers. To change unit display from miles to kilometers see page 1.26

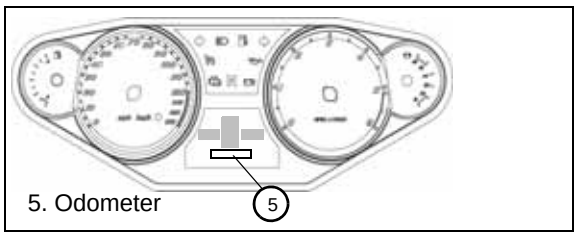

5. Odometer

© 2009 Polaris Sales Inc.

CHANGING INFORMATION DISPLAY UNITS

Standard and Metric Information Display options are available as indicated in the table:

2008 2009	2010		Standard Display	Metric Display
X	X	DISTANCE	Mi / Hour	Km / Hour
	X	FUEL UNITS	U.S. Gal	I (Imperial Gal) or Liters
	X	TEMP	F°	C°
X	X	CLOCK	12 Hour	24 Hour

To change the Information Display from English to Metric:

2008-2009 Models:

- With ignition key OFF, press and *hold* the MODE button on left handlebar switch (page 1.28).
- Turn ignition key to ON or ACC.
- When display shows flashing Mi or Km, toggle MODE button to desired screen display unit.
- Press and *hold* the MODE button until the display returns to Odometer to exit set-up mode.

2010 Models:

NOTE: To exit set-up mode at any time, wait 10 seconds and display will return to odometer.

- With ignition key OFF, press and *hold* the MODE button on left handlebar switch (page 1.28).
- Turn ignition key to ON or ACC.
- When display shows flashing MI or KM, toggle MODE button to desired screen display unit.
- Press and *hold* the MODE button until the display changes to the next item (FUEL units).
- Toggle MODE button to desired screen display unit.
- Press and *hold* the MODE button until the display changes to the next item (TEMP units)
- Toggle MODE button to desired screen display unit.
- Press and *hold* the MODE button until the display changes to the next item (CLOCK units)
- Toggle MODE button to desired screen display unit.

CONSOLE MOUNTED SWITCHES

The console mounted switches are used to control the following features:

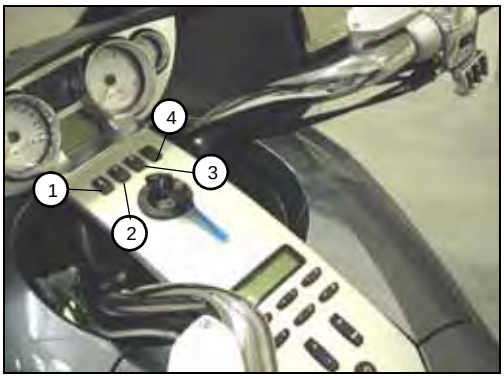

1. Hand grip heater
2. Hazard
3. Driving lamp
4. Accessory switch

HAND GRIP HEATER SWITCH

Press rocker switch toward Hi or Low position, depending on the amount of heat required. Press rocker switch to middle position to turn grip heaters OFF.

HAZARD SWITCH (Emergency Flashers)

The Hazard switch activates and de-activates emergency flashers. When emergency flashers are active, all turn signals flash.

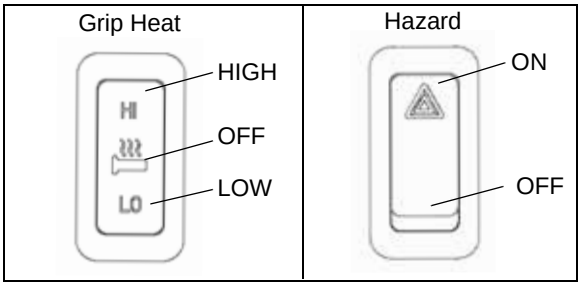

DRIVING LAMP SWITCH

When ignition key is ON, driving lamp switch operates the center headlamp or HID lamp (if equipped).

The driving lamp is not controlled by the high / low beam switch. It is an additional low beam lamp that can be on at all times if selected on the console.

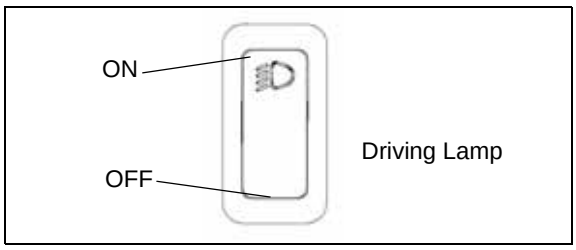

© 2009 Polaris Sales Inc.

INDICATOR LAMPS

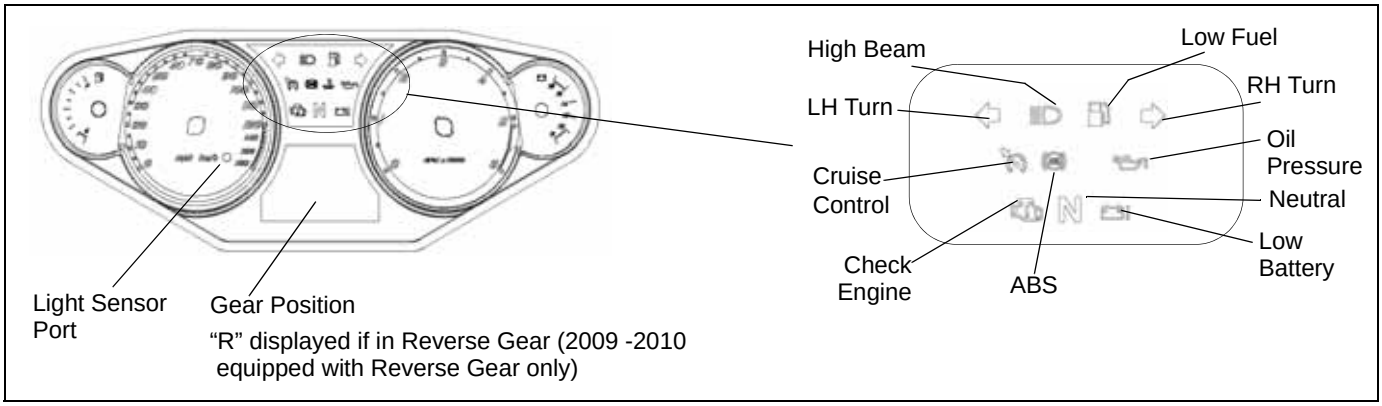

Indicator Lamp Function

N Neutral	Illuminates when transmission is in neutral (and Key is in ON or ACC position)
ABS	(2010 if equipped) ABS Indicator always illuminates when key is in the ON position and remains on until the anti-lock system is initiated, which occurs when vehicle speed reaches 6 MPH (10 km/h). See ABS in Chapter 15.
Reverse 2009 - 2010	On 2009 -2010 models equipped with reverse gear, "R" is displayed on the LCD when transmission is in neutral, ignition key is in ON, and Reverse shift lever is in the Reverse position (Up)
6 Gear Position	Indicates current transmission gear selected (6th gear shown)
High Beam	Illuminates when the head lamp switch is set to HIGH BEAM. Note: To energize headlamp circuit on 2009 models, tap starter button or start engine.
Cruise Control	Cruise Control indicator illuminates when cruise control power is ON and a set speed is selected. Review *Cruise Control Safety & Operation* in the Rider's Manual before operating the Cruise Control.
(L) (R) Turn	Flashes left arrow, right, or both (hazard) when turn or hazard is activated. If a turn signal bulb has failed, or if there is a short circuit in the system, turn signal indicator flashes at more than twice the normal rate.

Indicator Lamp Function

Check Engine	The Check Engine indicator (Malfunction Indicator Lamp or "MIL") is displayed during a system check. If system sensors report an abnormal condition, the indicator will continue to illuminate as long as the fault condition exists. An error code menu can be viewed on the Information Display by using the MODE button to toggle through the features until "Err" is displayed. Record the information that is displayed (e.g. "Err 3 - 520200") and refer to page 5.28 for code conversion. NOTE: These codes are not stored. The "Err" screen will appear when toggling the display with the MODE button *only* when the Check Engine light is on. If the key is turned OFF, the code and message is lost, but will reappear if the fault is still present after re-starting the engine. Refer to Chapter 5 for more information about "Err" messages.
Low Oil Pressure	The Low Oil Pressure indicator illuminates when the ignition switch is in the ON position and the engine is not running. This demonstrates that the indicator circuit is functioning properly. The indicator also illuminates when engine oil pressure drops below safe operating pressure. If this indicator illuminates while engine is running, turn the engine off as soon as safely possible and check the oil level. If the oil level is correct and the indicator remains illuminated after the engine is restarted, turn the engine off immediately.
Low Fuel	The Low Fuel indicator illuminates when approximately 1.0 gallons (3.8 liters) of fuel remains in the fuel tank.

© 2009 Polaris Sales Inc.

SEAT HEATER

The seat heater switches (if equipped) are located on the seat under the left passenger hand grip.

The driver and passenger seat heater settings are independently controlled. The front switch controls the driver's seat and the rear switch controls the passenger's seat.

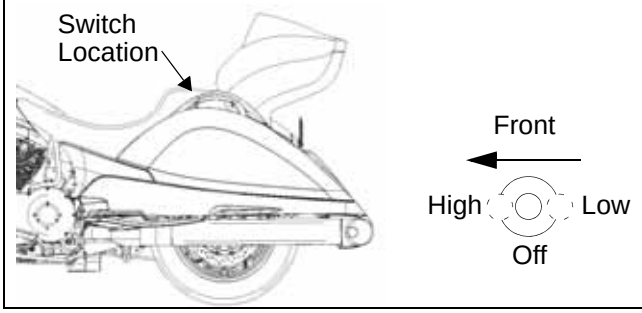

HEADLAMP HIGH / LOW BEAM SWITCH

The headlamp high/low beam switch toggles the headlamp between high and low beam. Note: To energize headlamp circuit on 2009 models, tap starter button or start engine.

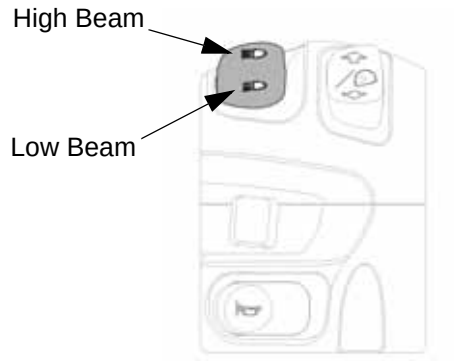

LEFT Handlebar Switch

LEFT HANDLEBAR SWITCH

MODE BUTTON

The MODE button is located on the front side of the left handlebar switch.

The MODE button is used to toggle through the various Information display items available, and to change the display from English (miles) to Metric (kilometers).

Refer to the individual display feature throughout this chapter for more information.

NOTE: If "Err" is displayed while toggling through the mode features, a system error has been logged in the ECM (the CHK ENG light may or may not be illuminated). Refer to Check Engine light information (page 1.27) and Chapter 5 for more information.

WINDSHIELD ADJUSTMENT SWITCH (Motorized)

The motorized windshield adjustment switch changes the height (and angle) of the windshield.

This button is active with the key in the ON or ACC position.

To move the windshield UP:

- Press the upper portion of the switch

To move the windshield DOWN:

- Press the lower portion of the switch

NOTICE: Do not continuously cycle windshield more than once in a 60 second period.

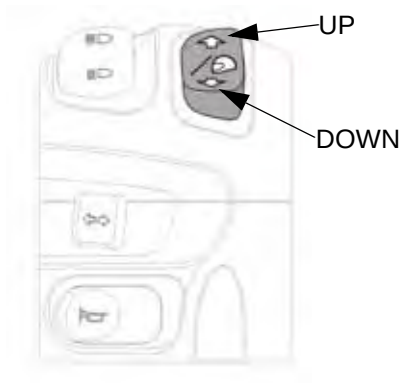

LEFT Handlebar Switch

© 2009 Polaris Sales Inc.

MANUAL WINDSHIELD ADJUSTMENT

1. Stop the motorcycle and turn the key OFF.
2. Remove the windshield trim panel.
3. Remove the retaining clip (1).
4. Hold slight downward pressure on the bottom of the windshield (it is under slight upward spring pressure).
5. Remove the clevis pin (2), slide the windshield inner bracket to align with one of the optional holes in the outer bracket, then reinstall the clevis pin.
6. Install the retaining clip in the clevis pin.
7. Install the windshield access panel.

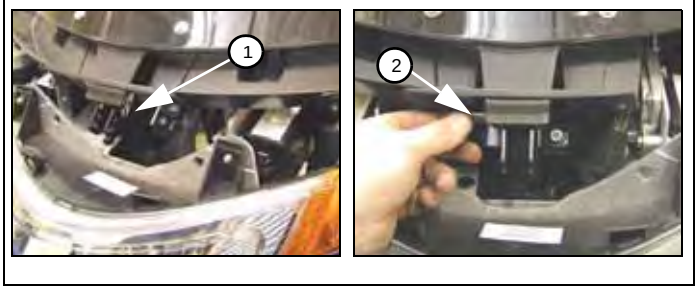

TURN SIGNAL SWITCH

With the ignition key in the ON or ACC position, the turn signal switch will activate the turn signals.

- Push the switch left to activate left turn signals
- Push the switch right to activate right turn signals
- To manually cancel either turn signal, push the switch straight in toward housing when the switch is in the center position.

If activated *below* 15mph* (24 kph), the turn signals cancel automatically, shortly after the vehicle speed reaches 15mph. If a signal is activated with vehicle speed above 15 mph, cancellation will occur based on distance traveled.

NOTE: If a signal is activated above 15 mph and vehicle speed drops below 15 mph, cancellation will occur shortly after speed again reaches 15 mph.
* The 15mph speed is approximate.

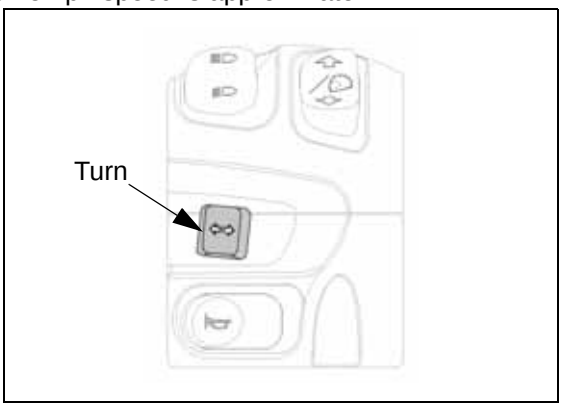

TURN SIGNAL MOMENTARY FEATURE

When passing a vehicle or when changing lanes, you have the option of using the *momentary* feature built in to the turn signal auto-cancel system.

Push and *hold* the turn signal switch in the direction you wish to turn. *Hold* the switch through at least one complete flash cycle (at least 1 second). This activates the momentary feature, and the signal will cancel the moment you release the switch.

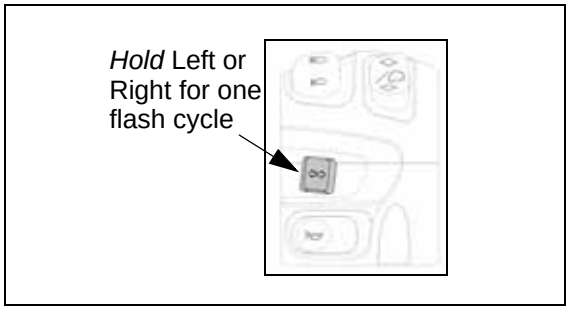

CLUTCH LEVER

To disengage the clutch, pull the lever toward the handlebar. To engage the clutch, gradually release the lever. For smooth clutch operation, pull the lever quickly and release it gradually.

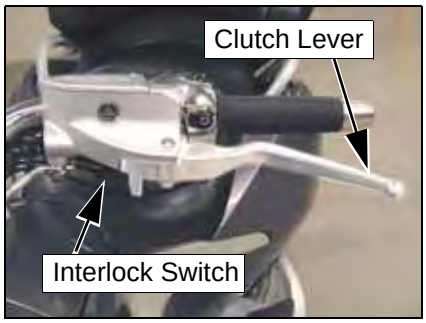

LEFT Handlebar

STARTER INTERLOCK

The motorcycle is equipped with a starter interlock switch that prevents the electric starter from operating when the transmission is in gear and the clutch is engaged (lever released), or if the Reverse lever is in the Reverse (Up) position (2009 10th Anniversary or Reverse equipped).

⚠ CAUTION

Never start the motorcycle in gear with the clutch disengaged unless you are seated on the bike in a normal riding position with the front brake applied.

© 2009 Polaris Sales Inc.

RIGHT HANDLEBAR CONTROLS

ENGINE STOP SWITCH

The engine stop/run switch completes or interrupts the ignition, starter, and fuel pump circuits.

Press RUN side of engine stop/run switch (RUN position).

Press STOP side of switch to interrupt circuits and stop the engine. The engine should not start or run when the switch is in the STOP position. Use STOP/RUN switch to turn engine off under either normal or emergency conditions. Turn key OFF after the engine stops.

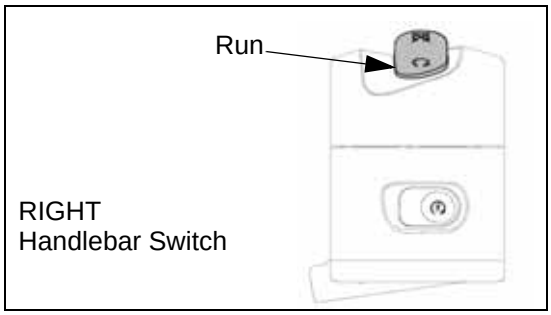

ENGINE STARTER BUTTON

The starter button works only when STOP/RUN switch is in RUN position and transmission is in neutral (or clutch is disengaged).

Press right side of starter button. Note: 2009 models - The headlamp circuit is not enabled until the starter button is tapped or pressed (engine started).

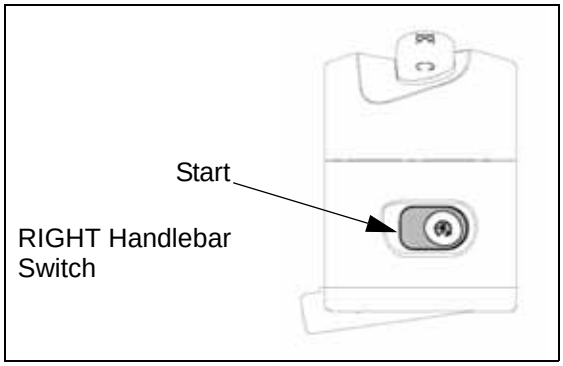

AUDIO / COM / CRUISE CONTROL BUTTONS

The remote audio control buttons are mounted below the LH bar switch. Cruise control buttons are mounted below the RH bar switch (throttle side). See page 1.34 for an overview of Audio System operation. Refer to Chapter 19 for Audio System and Cruise Control System diagnostic information.

MIRRORS

The rear view mirrors are adjusted by applying light pressure to left, right, top, or bottom edge (A).

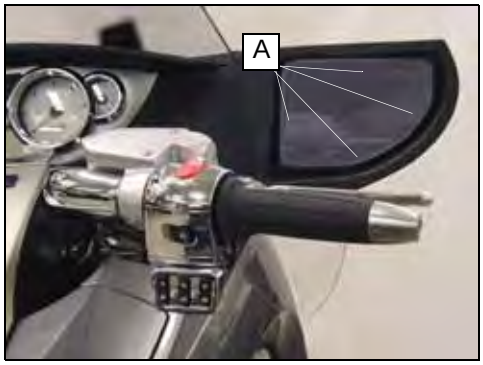

LINKED BRAKE SYSTEM

The front and rear brakes on the motorcycle are linked.

Application of the front brake lever activates only the top and bottom caliper pistons on each front caliper.

Application of the rear brake pedal activates the rear brake caliper fully. When firm pressure is applied to the pedal, the delay valve opens and the center piston in each front brake caliper is also activated. See Chapter 15 for Brake System service.

For maximum brake effectiveness, the front brake lever and rear brake pedal should be applied together, as you would with non-linked brake system.

ABS BRAKE SYSTEM

See Chapter 15 for ABS information.

© 2009 Polaris Sales Inc.

FRONT BRAKE LEVER REACH ADJUSTMENT

Front brake lever “reach” or distance to the hand grip is adjustable. To adjust the front brake lever reach:

- Pull the lever away from the grip (1) and *hold*.
- Turn dial (2) to align a lower number with the arrow (3) on the lever to increase lever reach distance.

Turn the dial to align a higher number with the arrow on the lever to decrease reach distance.

FOOT CONTROL ADJUSTMENT

The brake pedal and shift pedal can be adjusted to one of three positions. The controls are in the center position as delivered from Victory.

To move the controls to the front or rear position, do the following:

1. Use a 6mm Allen wrench to remove screw (1).
2. Slide the control forward or rearward in its track until the threaded hole of the control aligns with the front (2) or rear (3) screw hole in the footrest support.
3. Install the screw and torque to 96 lb-in. (11 Nm).

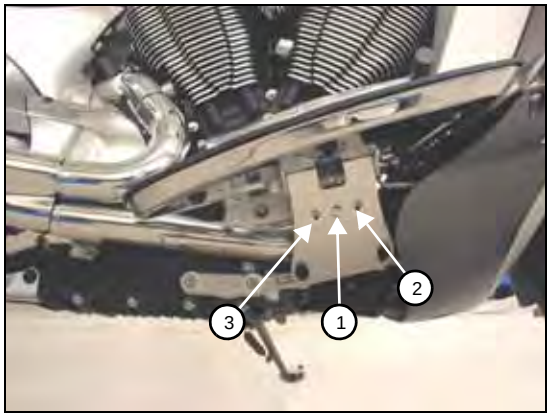

4. After adjusting shift pedal, always readjust the shift linkage rod.

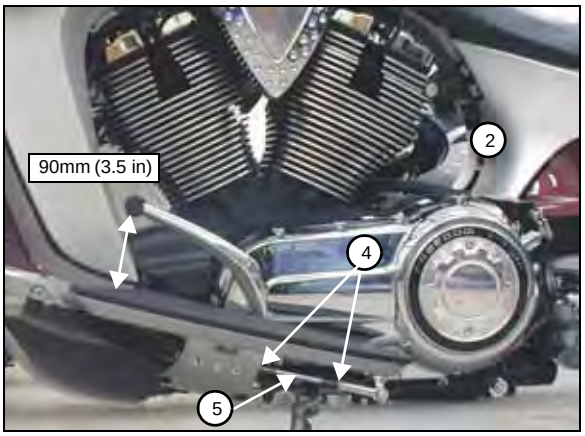

5. Loosen both jam nuts (4).
6. Turn linkage rod (5) until peg on shift pedal is about 90mm above floor board surface (or to desired height).
7. Tighten jam nuts to 96 lb-in. (11 Nm).

© 2009 Polaris Sales Inc.

FUEL DOOR

The fuel door is located on the right hand side of the console. To open the fuel door:

- Turn the handlebars fully left.
- From the OFF position, turn the ignition key counterclockwise to release the fuel door latch and the door will open under light spring tension. Do not depress the key while turning.
- To close the door, be sure the fuel cap is in place and secured properly, then close the door and press downward until latched.

FUEL CAP

Open the fuel door with the ignition key

- Turn the fuel cap counterclockwise to open.
- Set the cap in the holder while fueling.
- To install the cap, turn the fuel cap clockwise until seated.
- Close the fuel door by pressing downward until latched.

The fuel door is locked with the steering lock (page 1.23).

GLOVE COMPARTMENT

To OPEN the glove compartment:

- Turn the handlebars as required to clear the door. Press and release the inner edge of the door. The door will open under spring pressure.

To CLOSE the glove compartment:

- Push the door firmly until latched, then release.

To LOCK the glove compartment:

- Close the glove compartment door.
- Turn the ignition key to the lock position.

The fuel door and glove compartment are locked when the steering is locked.

© 2009 Polaris Sales Inc.

SADDLEBAGS

Use the ignition key to lock and unlock the saddlebags.
Lock the saddlebags when riding.

- Refer to loading information beginning on page 1.9.

TRUNK OPERATION

Use the ignition key to Lock and unlock the trunk.

Lock the trunk when riding.

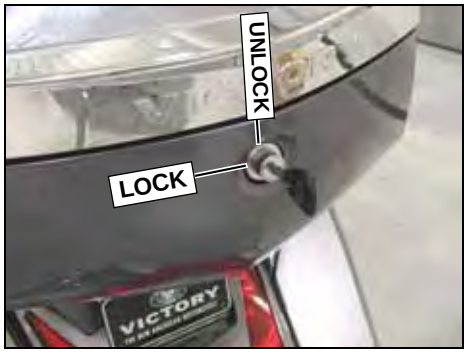

© 2009 Polaris Sales Inc.

RADIO / AUDIO SYSTEM

RADIO / AUDIO SYSTEMS OPERATION

The following pages describe the operation and function of the various Radio and Audio systems such as AM/FM/WX audio system, CB radio / intercom, XM® radio, auxiliary and iPod® audio, NAV MP3 (2010 models), and CD changer (2008-2009 only).

iPod is a registered trademark of Apple Inc.

XM is a registered trademark of XM®Satellite Radio Inc.

Not all motorcycles are equipped with all components discussed in the audio section of this manual.

Refer to Chapter 19 (Electrical Systems) for diagnostics.

2010 denotes information specific to model year 2010.

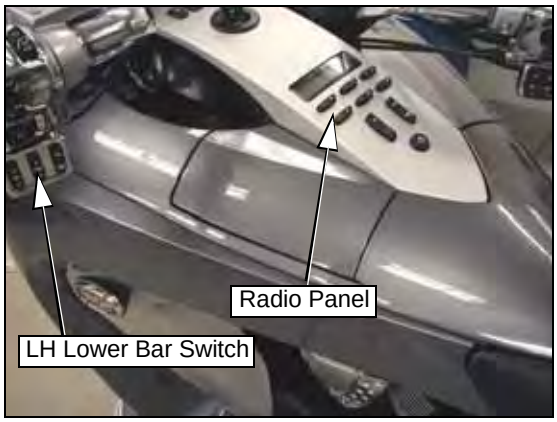

RADIO FREQUENCIES

North America

- AM 520 to 1720 kHz
- FM 87.9 to 107.9 MHz
- WX 162.40 to 162.55 MHz

European

- FM 87.5 to 108.00 MHz
- MW 522 to 1602 kHz
- LW 144 to 288 kHz

MAIN USER INTERFACE

1. **LCD screen**: The LCD screen displays information for the active source or sources.
2. **Memory presets**: Allows operator to store and recall up to 12 radio stations, directly-select any 1 of 10 CDs in CD changer (2008-2009), or directly-access up to 11 iPod user-defined playlists.
3. **Volume / Menu Option Select control**: Adjust volume or cycle through menu options in the MODE menus.
4. **Power ON / OFF**: Press the power button to turn the system on or off.

NOTE: Ignition switch must be in ON or ACC position.

5. **Source (SRC) - Mode**: Press SRC to cycle through available sources, or to exit MODE menus. Press and release MODE to enter the audio system mode menus. Continue to press and release the MODE button until the desired mode menu is displayed. Additional information on each source is available in this section.

U.S. Sources:

- FM / AM / WX / AUX (NAV MP3, AUX or iPod) / XM Radio / CD Changer

European Sources:

- FM / MW / LW / AUX (iPod or NAV MP3) / CD Changer

Mode Menu Options:

- Bass / Treble / Fader / External Speakers / Automatic Volume Control (AVC) / CB Headset ENT / ICOM Volume / CB Volume / CB LO/DX / Tuning / Radio Data System (RDS) / AUX Mode / XM Display / XM Category / XM Tune Mode.
- Some Mode Menu Options have sub-menus. Refer to detailed information about each in this chapter.

Sources and menu options will only be displayed for installed components.

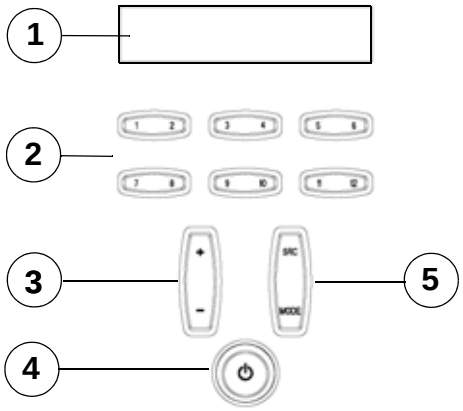

© 2009 Polaris Sales Inc.

LOWER LEFT HAND CONTROL

Operation of the left handlebar audio control is outlined in greater detail on the following pages.

1. **Volume control**: Press to increase (+) or decrease (-) audio volume. Press and hold to rapidly increase or decrease volume.
2. **Tuner control**: Press (+) or (-) to manually tune radio stations, iPod tracks, or CD tracks. Press and hold to automatically seek or scan.
3. **Source/Exit - Mute select**: Press S/E to cycle through available sources or to exit the current mode.
4. Press **MUTE** to silence the audio and pause the iPod.

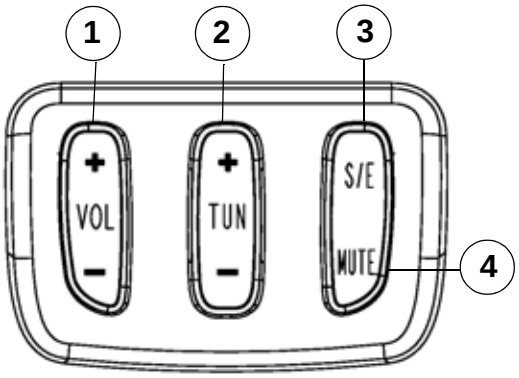

UPPER LEFT HAND CONTROL*

Operation of the left handlebar CB control is outlined in greater detail on the following pages.

1. **PTT (Push to Talk)** - Press and hold top or bottom of PTT button to transmit (page 1.44).
2. **Squelch**: Press SQ (+) or SQ (-) to adjust CB radio channel reception sensitivity (page 1.44).
3. **COM - ICOM select**: Press COM to turn the CB on or off. Press and hold COM to select a COM channel. Press ICOM to turn the driver/passenger intercom on or off. Press and hold ICOM to access Voice Activated Switch (VOX) settings (page 1.46).

* If equipped with CB radio.

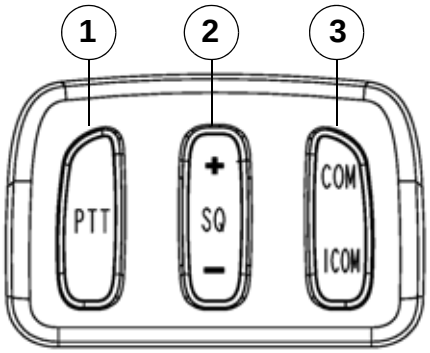

REAR PASSENGER CONTROL

1. **Rear PTT (Push to Talk)**: Press and hold PTT button to transmit.
2. **Rear Volume control**: Press VOL (+) or (-) to raise or lower rear passenger headset volume.

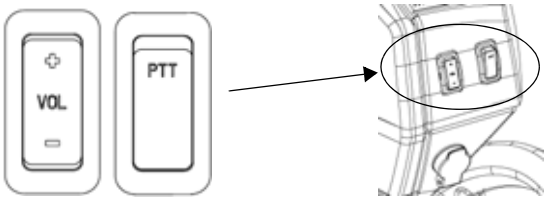

AUDIO SYSTEM POWER

The ignition key must be in the ACC or ON position to use the audio system.

With the key in the ACC or ON position and audio system OFF, the screen will display “VICTORY MOTORCYCLES” or “VICTORY” (2010).

NOTE: To prevent battery drain, do not leave the key in the ACC position for long periods. Victory recommends using the audio system only when the engine is running.

Press the power button to turn the audio system on.

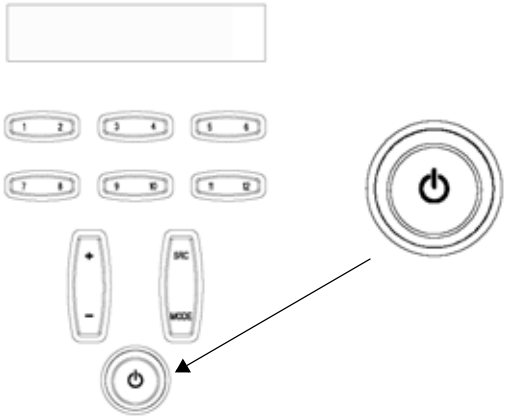

© 2009 Polaris Sales Inc.

When powered, the screen will display the active source(s).

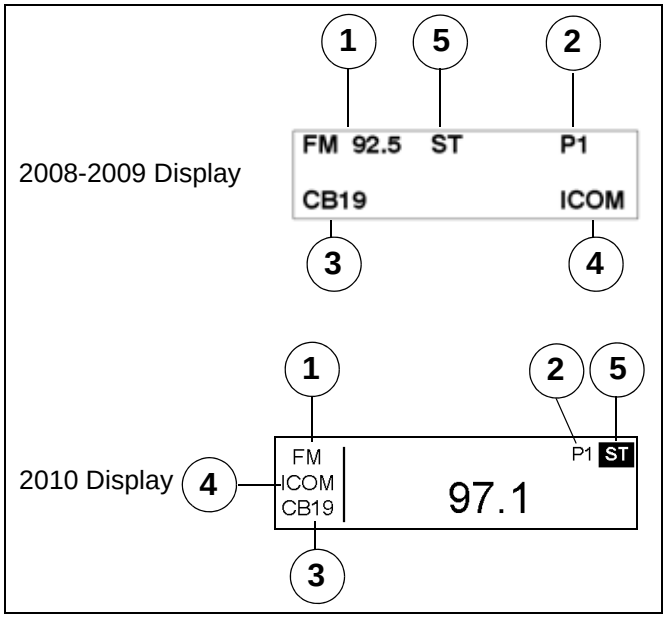

NOTE: Screen style examples are shown above. Primary information is shown along the left side of display on 2010 models.

1. Current audio source:
   - (U.S.) FM / AM / WX / iPod - AUX / XM / CD Changer
   - (Euro) FM / MW / LW / iPod - AUX / CD Changer
2. Station preset number (P1 - P12).
3. CB radio active and active channel.*
4. Intercom system active.*
5. Stereo indicator.

* If equipped.

NOTE: The audio system will always display the last active source when turned on.

VOLUME CONTROL

The driver can set the volume level for the front and rear speakers, turn the speakers off or on, and mute the system audio.

AUDIO MUTE

Press and release MUTE to drop audio system volume. To resume volume to prior level, press and release MUTE again.

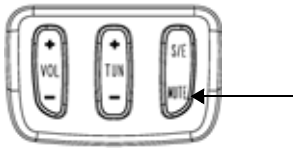

AUDIO VOLUME

Press and release (+) or (-) on console to raise or lower volume. You can also press VOL (+) or (-) on left control.

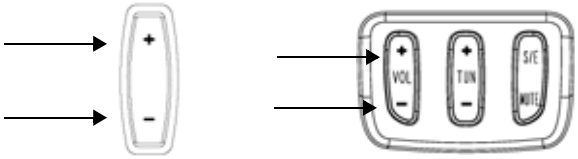

PASSENGER VOLUME

The passenger can control the rear headset music volume, CB, and ICOM volume when either are active.

Press (+) or (-) on the passenger control to raise or lower the rear headset volume.

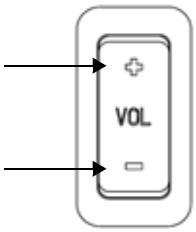

© 2009 Polaris Sales Inc.

AUDIO SOURCE SELECTION

Press and release S/E or SRC until desired source is active.

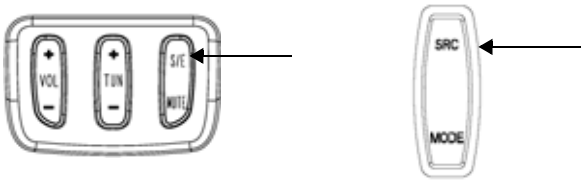

FM source active:

FM 92.5 ST

FM	97.1 ST

U.S. / European models

AM source active:

2008-2009 Display

AM 1130

2010 Display

AM	1130

U.S. models only

WX (Weather) source active:

WX	3

U.S. models only

AUX source active:

2008-2009 Display

AUX

2010 Display

AUX ICOM CB19	AUX

U.S. / European models

NAV MP3 source active:

2010 Display

AUX ICOM CB19	NAV MP3

U.S. / European models

iPod source active:

2008-2009 Display

iPod Name of Song

2010 Display

iPod	Artist Title Playlist

U.S. / European models
(skipped if not equipped)

XM Radio source active:

2008-2009 Display

XM 8 The 80s

2010 Display

XM	CH25 P6 TheBlend Sting Fields of Gold

U.S. / European models
(skipped if not equipped)

CD Changer source active:

2008-2009 Display

CD 1 TRK4 0:04

U.S. / European models
(skipped if not equipped)

© 2009 Polaris Sales Inc.

MW (Medium Wave) source:

European models only

LW (Long Wave) source:

European models only

AUDIO TUNING

Press and release TUNE (+) or TUNE (-) on the left hand control to locate stations in single-step increments.

NOTE: Additional tuning features (double-click) are available with some sources such as iPod. Refer to specific source tuning information in this chapter for more information.

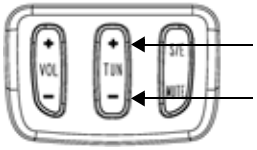

Press and hold TUNE (+) or TUNE (-) to SEEK or SCAN for stations (seek or scan depends on mode setting).

Press and release TUNE (+), TUNE (-), or S/E to exit the seek or scan function

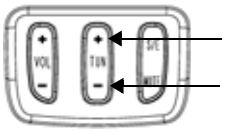

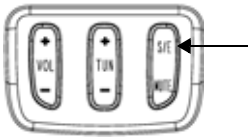

MEMORY PRESETS

The audio system features 12 user-defined presets that can be used to store favorite stations.

To set a preset, select the desired source (FM, AM, WX, XM, MW, LW, or AUX-iPod).

Use TUNE or seek/scan to locate a radio station.

Press and hold one of the console preset buttons (P1 - P12) until the audio sound is muted for 1/2 second.

Once the station is given a preset location, the screen will display its memory preset location.

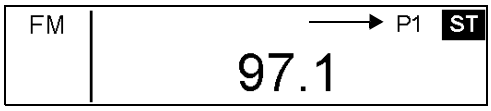

AUDIO MODE MENUS

To enter mode menus display:

Press and release the MODE button on the console panel to enter the audio system mode menus.

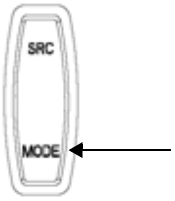

Continue to press and release the MODE button until the desired setting is shown on the display screen.

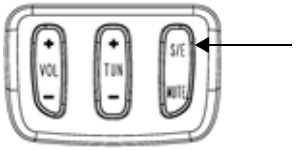

To exit mode menus display:
:
Press S/E on the left control or the SRC button on the console to exit the screen and return to the main display.

NOTE: After 5 seconds of inactivity, the system will exit the menu and return to the default display.

© 2009 Polaris Sales Inc.

BASS SETTING

Press (+) or (-) on the console panel to adjust the level. (See page 1.38 to enter and exit mode menus).

2008-2009 Display

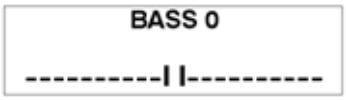

2010 Display

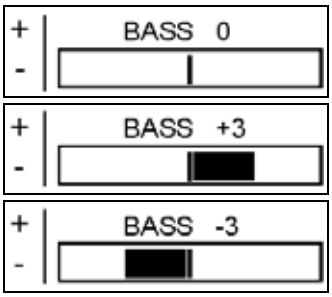

TREBLE SETTING

Press (+) or (-) on the console panel to adjust the level. (See page 1.38 to enter and exit mode menus).

2008-2009 Display

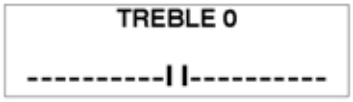

2010 Display

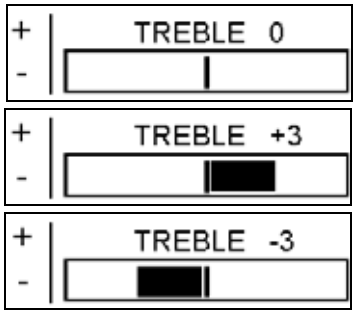

FADER SETTING

Press the console panel (+) or (-) button to adjust the front and rear speaker output ratio. This setting is skipped when the external speakers are off.
(See page 1.38 to enter and exit mode menus).

2008-2009 Display

2010 Display

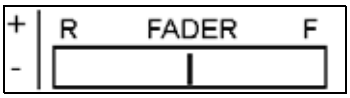

EXTERNAL SPEAKERS

Press (+) or (-) on the console panel to turn the speakers on or off. (See page 1.38 to enter and exit mode menus).

2008-2009 Display

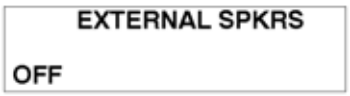

2010 Display

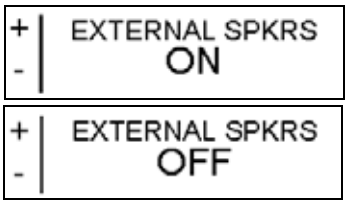

AUTOMATIC VOLUME CONTROL (AVC)

When set, this feature will lower or raise the speaker/headset volume automatically, based on vehicle speed.

(See page 1.38 to enter and exit mode menus).

Press the console panel (+) or (-) button to set the Automatic Volume Control settings.

- AVC Off = No AVC. Volume will not adjust.
- AVC Low = Least aggressive AVC setting.
- AVC Medium = Moderate AVC setting.
- AVC High = Most aggressive AVC setting.

2008-2009 Display

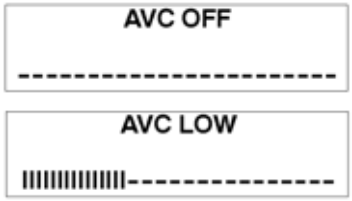

2010 Display

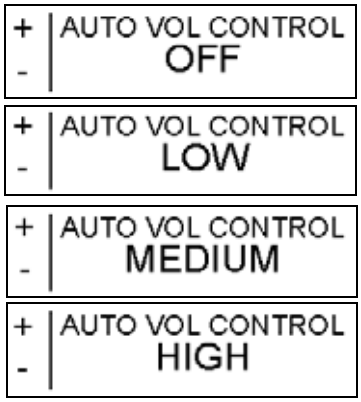

© 2009 Polaris Sales Inc.

CB HEADSET VOLUME CONTROLS*

The headsets have 3 separate volume settings: Intercom (ICOM) volume, CB receive volume, and entertainment (ENT) volume. Always position headsets with the speakers directly over your ears to ensure the best sound quality and volume.

NOTE: The driver can turn off the external speakers and listen to audio only through the headsets.

Item	Driver Controls	Passenger Controls
ENT Volume	Press VOL (+) or VOL (-) on the left control or press the console panel (+/-) (while listening to ENT).	Press (+) or (-) on the passenger control.
ICOM Volume	Press VOL (+) or VOL (-) on the left control (when VOX is in use) or press the console panel (+/-) when the ICOM volume screen is active from the mode menu.	
CB Receive Volume	Press VOL (+) or VOL (-) on the left control (when receiving a CB transmission) or press the console panel (+/-) when the CB volume screen is active from the mode menu.	

CB HEADSET ENT MODE*

(See page 1.38 to enter and exit mode menus).

Press the console panel (+) or (-) button to set the CB Headset ENT settings.

2010 Display Shown

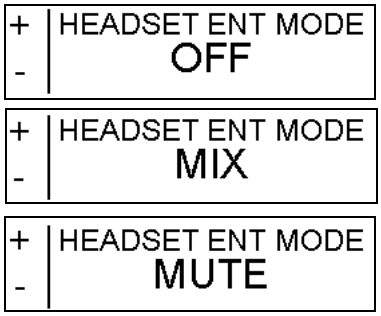

OFF: Only communications are audible in the headsets. Riders can listen to navigation commands and entertainment with the external speakers while reserving the headset for communication.

MIX: The audio source volume drops lower than the ICOM volume whenever the voice operated switch (VOX) is opened. The audio source volume gradually returns to its original level after the VOX is closed.

MUTE = The audio source volume is muted when the VOX is opened. The audio source volume gradually returns to its original level once the VOX is closed.

ICOM VOLUME*

(See page 1.38 to enter and exit mode menus).

Press (+) or (-) on the console panel to change settings.

2008-2009 Display

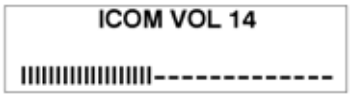

2010 Display

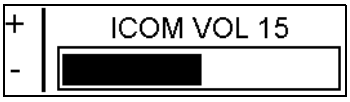

CB RECEIVE VOLUME*

Press (+) or (-) on the console panel to change settings.

2008-2009 Display

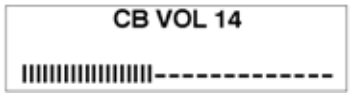

2010 Display

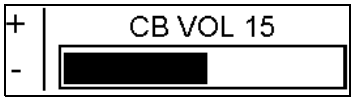

CB LO/DX* MODE

Press (+) or (-) on the console panel to change settings. See page 1.45 for more detailed information.

Reference the CB / ICOM section for more information.

2008-2009 Display

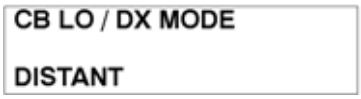

2010 Display

TUNING (Seek / Scan Modes)

Press (+) or (-) on the console panel to set the tuner SEEK or SCAN mode.

2008-2009 Display

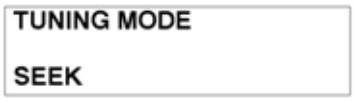

2010 Display

***Setting skipped when CB radio is not present**.

© 2009 Polaris Sales Inc.

RADIO DATA SYSTEM (RDS)

(See page 1.38 to enter and exit mode menus).

2010 models only:
Press (+) or (-) on the console to turn RDS on or off. ON setting will display artist, song title, etc. (if available in the radio signal you are receiving).

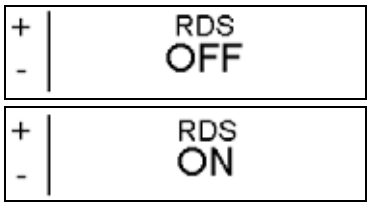

AUX MODE

Press (+) or (-) on the console panel to set the mode to AUX (for iPod or any other MP3 player connected in the left storage compartment) or to NAV MP3 for navigation unit MP3 player use.

NOTE: NAV MP3 mode will override any device connected with an input cable in the left storage bin.

2010 Display

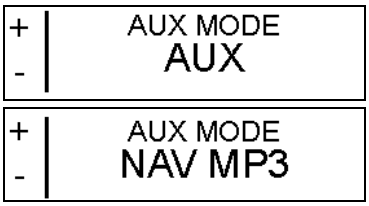

NOTE: If using NAV MP3 mode, always pause the Garmin unit before changing sources. Otherwise, music from the NAV unit will interrupt the new source, interpreting it as navigation commands, not music.

XM DISPLAY*

(See page 1.38 to enter and exit mode menus).

2008-2009:
Press (+) or (-) on the console panel to set the screen to display the artists or song title name when the XM radio is active.

2008-2009 Display

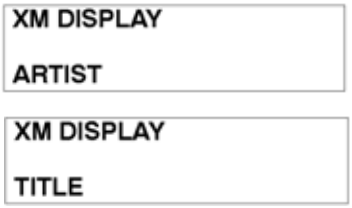

2010:
Press (+) or (-) on the console panel to set the screen to display channel name or category when the XM radio is active.

2010 Display

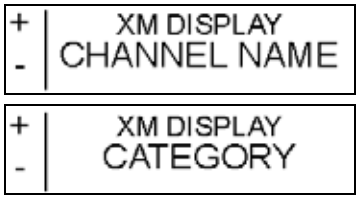

*Setting skipped when XM radio is not present.

XM TUNE MODE*

(See page 1.38 to enter and exit mode menus).

Press (+) or (-) on the console panel to change the mode.

In SCAN mode, TUNE (+) or TUNE (-) will tune to the next higher or lower XM channel, remain there for up to 5 seconds, then automatically tune to the next higher or lower channel until TUNE (+) or TUNE (-) is pressed again.

In SEEK mode, TUNE (+) or TUNE (-) will find the next higher or lower station and stop.

2010 Display

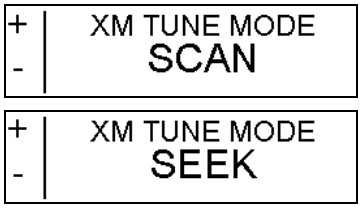

***Setting skipped when XM radio is not present.**

© 2009 Polaris Sales Inc.

XM CATEGORY*

(See page 1.38 to enter and exit mode menus).

Press (+) or (-) on the console panel to set the music selection category when tuning XM.

These categories are downloaded from XM whenever the XM antenna is receiving a signal and may change from time to time.

2010 Display

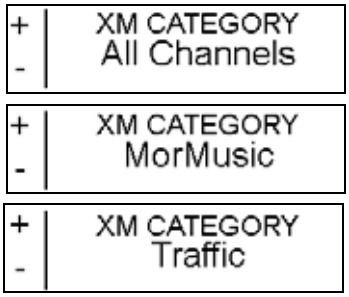

NOTE: Selecting a category will then limit the channels available to those within that category until ALL CHANNELS or another category is selected.

***Setting skipped when XM radio is not present.**

NOAA WEATHER BAND (WB or WX)

Weather band channels are broadcast by the National Oceanic and Atmospheric Administration (NOAA). NOAA operates more than 940 transmitters covering the United States, Puerto Rico, the U.S. Virgin Islands, U.S. Pacific Territories, and adjacent coastal waterways.

Typically, only one weather band channel will be available for a given location. When traveling, if a channel becomes unavailable, search for another active channel.

When the WB source is selected (WX on 2010 models), a total of 7 weather band channels are available.

2008-2009 Display

2010 Display

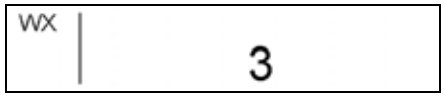

WX Channels

WX CH.	FREQ.
1	162.400
2	162.425
3	162.450
4	162.475
5	162.500
6	162.525
7	162.550

Access each WX channel by pressing P1 - P7 on the console, or use Tune (+) (-).

© 2009 Polaris Sales Inc.

CB RADIO / ICOM SYSTEM

INTRODUCTION - CB RADIO FCC RULES

In the U.S.A., refer to the Federal Communications Commission (FCC) Plain Rules pamphlet accompanying the rider's manual on the motorcycle for a comprehensive guide of citizens band (CB) radio rules and regulations.

HEADSET USE

The use of helmet-mounted headsets may be restricted or prohibited in some areas. Always obey all applicable regulations and laws.

The headsets have three separate volume settings: Intercom (ICOM) volume, CB receive volume and entertainment (ENT) volume. See page 1.40 for more information.

GETTING STARTED - CB / ICOM

NOTE: To minimize distractions while riding, always make adjustments to the CB/ICOM system prior to operating the motorcycle.

NOTE: To prevent battery drain, do not leave the key in the ACC position for long periods. Victory recommends using the audio system only when the engine is running.

The ignition key must be in the ACCESSORY or RUN position to use the audio system.

Press the **power button** to turn the audio system on.

Press **COM** on the upper left handlebar control to activate the CB-COM system.

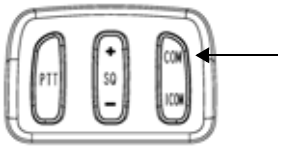

CB CHANNELS

When the CB radio system is active, "CB" and the active channel will display.

(2010 Display Shown)

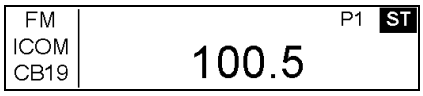

Press and hold **COM** on the upper LH control to access the **CHANNEL ADJUST** screen.

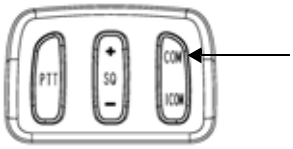

Push **COM** or **ICOM** on the left control or (+) or (-) on the console panel to change channels.

2008-2009 Display

2010 Display

NOTE: Changing to a new channel may require changing the squelch setting.

Press **S/E** on the lower LH control, or allow the system to time-out to exit the **CHANNEL ADJUST** screen and return to the main display.

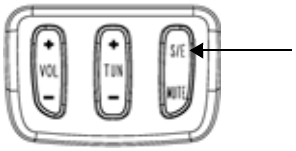

© 2009 Polaris Sales Inc.

PUSH-TO-TALK (PTT)

Press and hold the top or bottom of the PTT button on the upper LH control to transmit over CB radio.

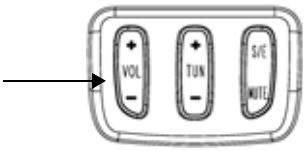

The passenger push and hold the rear **PTT** button.

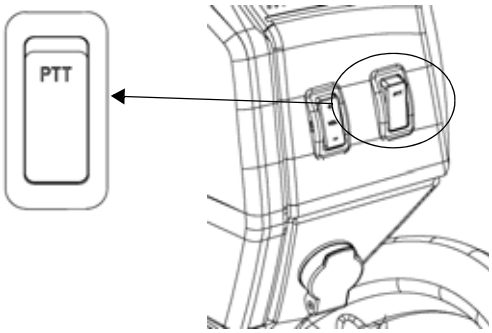

"**TX**" will display on the console screen when one of the **PTT** buttons is pressed.

"**RX**" will display when the CB is receiving a transmission.

2008-2009 Display Transmitting

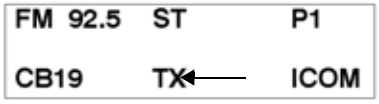

2010 Display Transmitting

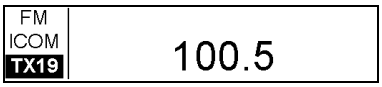

2010 Display Receiving

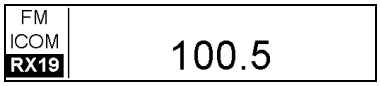

SQUELCH

Squelch blocks undesired signals and noise by allowing the reception of signals only over a specified level.

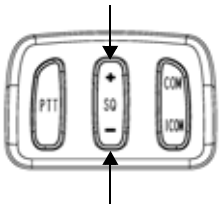

Press and release the **SQ(+)** or **SQ(-)** buttons to adjust the squelch level to any level between OPEN and CLOSED.

2008-2009 Display

2010 Display

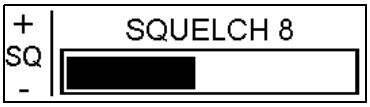

When squelch is set to **OPEN**, no filtering occurs. Setting squelch to **CLOSE** blocks all signals, including strong signals.

To set the squelch level, first lower the squelch level until noise or static is audible.

Gradually increase the squelch level until the noise or static is gone.

Press **S/E** on the lower LH control or allow the system to time-out to exit the **SQUELCH** set screen and return to the main display.

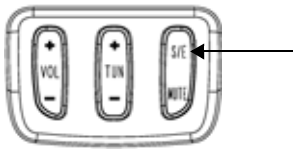

© 2009 Polaris Sales Inc.

CB RADIO VOLUME SETTING (Driver)*

*Setting skipped when CB radio is not present.

Press and release the **MODE** button on the console panel to enter the audio system mode menus.

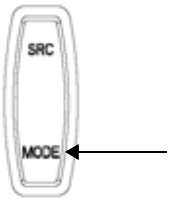

Continue to press and release the **MODE** button until CB VOL is shown on the display.

Press (+) or (-) on the console panel to adjust settings. Press S/E to save and exit.

NOTE: The CB volume can also be set using the hand control (VOL +/-) when the CB is receiving.

2008-2009 Display

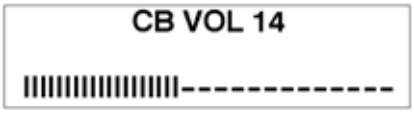

2010 Display

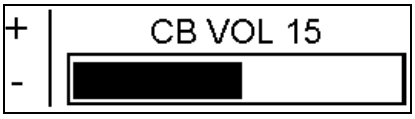

CB RADIO VOLUME SETTING (Passenger)*

*Setting skipped when CB radio is not present.

The passenger can control rear headset volume when the Entertainment, CB radio or ICOM is active (each volume setting is independently adjustable.)

Press **(+)** or **(-)** on the passenger control to raise or lower the rear headset volume.

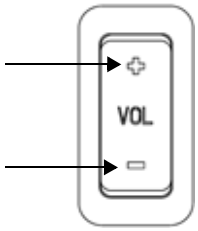

CB LO/DX*

*Setting skipped when CB radio is not present.

Press and release the **MODE** button on the console panel to enter the audio system mode menus.

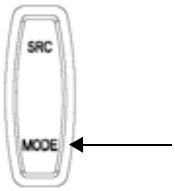

Continue to press and release the **MODE** button until the desired setting is shown on the display screen.

Press (+) or (-) on the console panel to set the CB to **LOCAL (LO)** or **DISTANT (DX)** mode.

Press S/E to save and exit.

2008-2009 Display

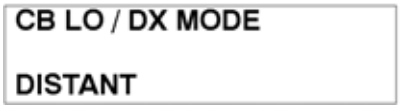

2010 Display

Distant: Use this setting for weaker signals. Receiver sensitivity will be increased. Static and noise levels are increased.

Local: Use this setting for stronger signals or in high density areas. Receiver sensitivity will be decreased. Static and noise levels are decreased.

© 2009 Polaris Sales Inc.

CB FREQUENCIES

The FCC has designated 40 citizen band (CB) channels for consumer use.

NOTE: Channel 9 is designated as an EMERGENCY channel for emergency use only.

CB Channels / Frequencies

CH.	FREQ.	CH.	FREQ.	CH.	FREQ.
1	26.965	8	27.055	15	27.135
2	26.975	9	27.065	16	27.155
3	26.985	10	27.075	17	27.165
4	27.005	11	27.085	18	27.175
5	27.015	12	27.105	19	27.185
6	27.025	13	27.115	20	27.205
7	27.035	14	27.125	21	27.125
22	27.225	31	27.315	40	27.405
23	27.255	32	27.325		
24	27.235	33	27.335		
25	27.245	34	27.345		
26	27.265	35	27.355		
27	27.275	36	27.365		
28	27.285	37	27.375		
29	27.295	38	27.385		
30	27.305	39	27.395		

ICOM SYSTEM

Press and release ICOM on the upper LH control to activate the intercom system.

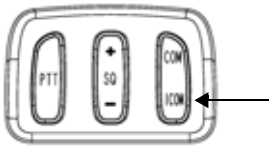

When the intercom system is active, **ICOM** will be displayed on the console screen.

2008-2009 Display

2010 Display

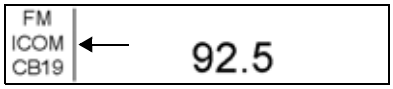

VOX BREAK SETTING

The intercom is opened and closed using a voice operated switch (VOX). The volume sensitivity level required to open the intercom can be adjusted using the VOX sensitivity setting.

Press and hold **ICOM** on the upper LH control to access the **VOX** sensitivity set screen.

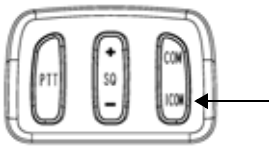

Push **COM** or **ICOM** or **(+)** / **(-)** on the console panel to adjust the sensitivity setting.

Lower settings require less volume to open the intercom.

If wind, or ambient vehicle noise trigger the **VOX** to open, set the **VOX** sensitivity to a higher level.

2008-2009 Display

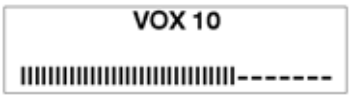

2010 Display

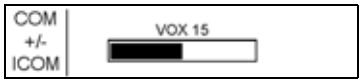

© 2009 Polaris Sales Inc.

Press **S/E** on the lower LH control to exit the **VOX** volume set screen and return to the main display.

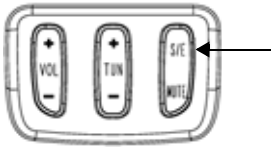

"**VOX**" will be display on the console screen whenever the driver or passenger are communicating over the intercom system.

2008-2009 Display

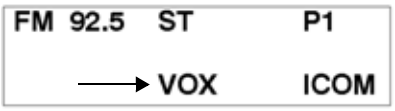

2010 Display

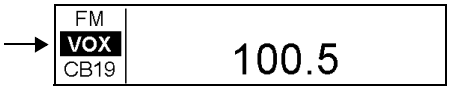

ICOM VOLUME SETTING (Driver)*

*Setting skipped when CB radio is not present.

Press and release the **MODE** button on the console panel to enter the audio system mode menus.

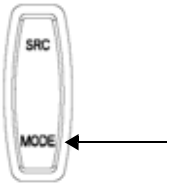

Continue to press and release the **MODE** button until the desired setting is shown on the display screen.

Press **(+)** or **(-)** on the console panel to adjust settings.

Volume can also be adjusted using LH control when VOX is open.

2008-2009 Display

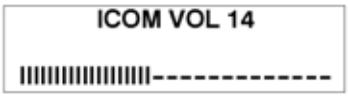

2010 Display

Press **S/E** on the LH control at any time to exit the system setting menus and return to the default screen.

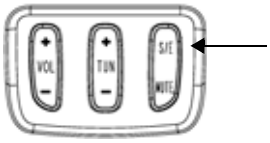

ICOM VOLUME SETTING (Passenger)

The passenger can control the rear speaker volume only when the CB radio, ICOM, or rear headset speakers are active.

Press **(+)** or **(-)** on the passenger control to raise or lower the rear speaker volume.

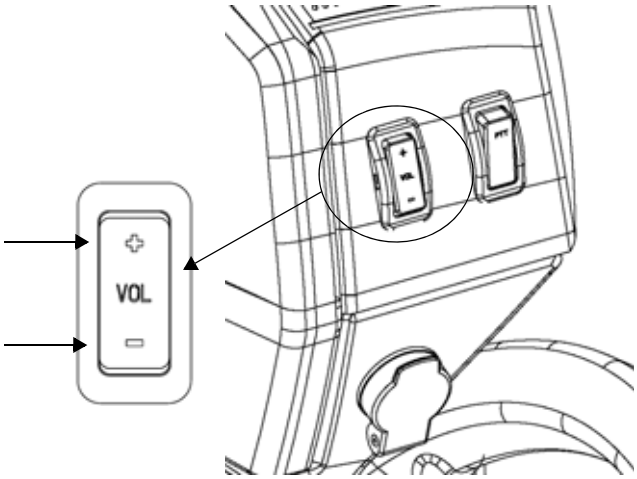

Headset Receptacles

A headset receptacle is provided for both the driver and passenger (if equipped).

Driver Headset Receptacle

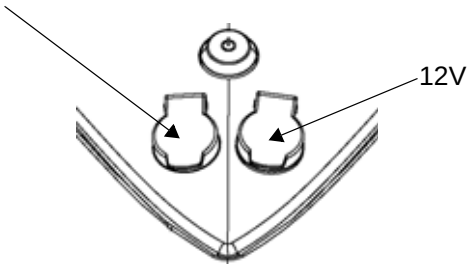

Passenger Headset Receptacle

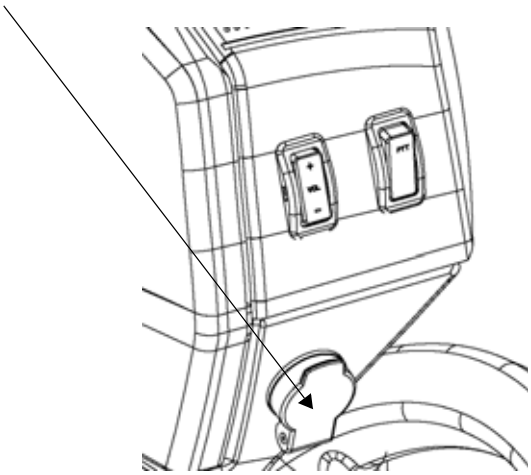

© 2009 Polaris Sales Inc.

AUX / iPod

GETTING STARTED - AUX / iPod

To use your iPod, connect the iPod input cable.

AUX Input Cable

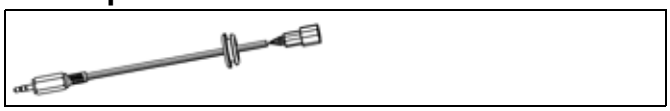

iPod Input Cable

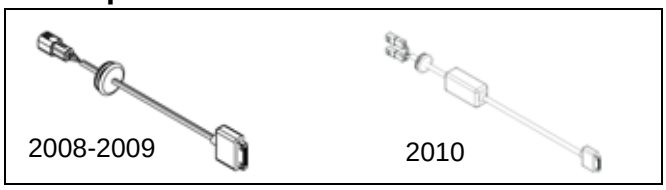

Input Cable Setup

The AUX and iPod input cables are connected to the audio system through a small hole in the left-side console storage bin. Only one input cable can be connected at any given time.

To change an input cable:

1. Open the left-side console storage bin.
2. Locate the input cable and sealing grommet at the bottom of the bin.
3. Carefully pull the cable along with both connectors inside the bin.
4. Disconnect the cable from the harness by carefully pushing up on the green tab (2008-2009) or by pushing down on the locking tab (2010). Aux harness uses one connector, iPod uses two (2010). Make sure the unused connector is capped when the Aux cable is used. Do not allow the harness to drop back through the hole.
5. Install the desired input cable.
6. Carefully push sealing grommet back into the hole.

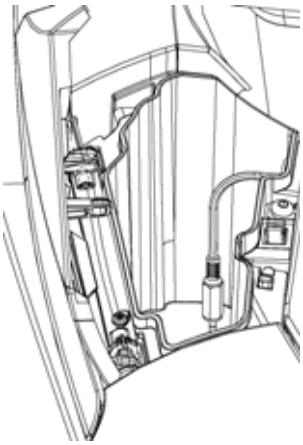

iPod Use

The ignition key must be in the ACCESSORY or RUN position to use the AUX / iPod function.

NOTE: To prevent battery drain, do not leave the key in the ACC position for long periods. Victory recommends using the audio system only when the engine is running.

Press the power button to turn the audio system on.

Press and release the S/E button on the lower LH control...

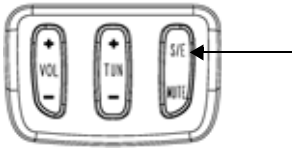

...or SRC on the console panel until AUX or iPod is active.

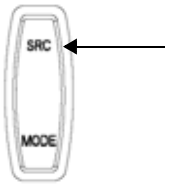

When AUX is active, the console screen will display “AUX” as the active source.

2008-2009 Display

2010 Display

When iPod is active, the console screen will display the name of the iPod (2008-2009) or iPod as the active source and iPod information in the display screen (2010).

2008-2009 Display

2010 Display

© 2009 Polaris Sales Inc.

AUX MODE (2010)

To change the mode, press the MODE button on the console repeatedly as required to toggle to the AUX MODE screen.

Use the console + / - button to change the mode to AUX (for iPod or any other MP3 player use) or to NAV MP3 for navigation unit MP3 player use.

NOTE: NAV MP3 mode will override any device connected with an input cable in the left console storage bin.

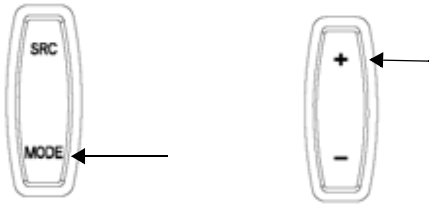

2010 Display

+ -	AUX MODE AUX
+ -	AUX MODE NAV MP3

iPod PLAY LISTS

Access the iPod main music library and user-defined play-lists with the console preset buttons.

NOTE: Generic MP3 players can play music, but cannot be controlled though the audio system (for example, selecting tracks or playlists).

Press and release preset button (1) to access the iPod main music library.

2008-2009 Display

MY iPod

2010 Display

iPod ICOM CB19	Artist Song Title My iPod

Press and release preset buttons (2) through (12) to access your iPod user-defined play-list(s).

2008-2009 Display

MY TOP RATED

2010 Display

iPod ICOM CB19	Artist Song Title My Playlist 3

iPod TUNING

ALL: Press and release the TUNE (+) or (-) button on the left control to move 1 track forward or 1 track backward.

2008-2009 Only: Press and release the TUNE (+) or TUNE (-) button on the lower LH control twice (double click) to move 10 tracks forward or 10 tracks backward.

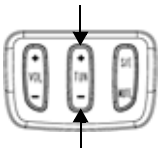

2010 Only: Press TUNE (+) or TUNE (-) button twice (double click) to bring up the track selection screen, then use the TUNE button to move forward and backward through the playlist. When the desired track is highlighted, press any preset button on the console to select the track.

To exit the screen without changing tracks, press S/E.

2010 Models

+ TUNE -	Track 1 **Track 2** Track 3

ALL: Press and hold the TUNE (+) or TUNE (-) button on lower left control to fast forward or fast reverse the track.

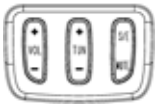

2010 Only: To browse tracks by artist, playlist, or album, press and hold any preset button to bring up the selection screen. Press TUNE (+) or (-) to make a selection.

2010 Models

+ TUNE -	Artist **Playlist** Album

Then press any preset button to bring up the items in the selected list. Press TUNE (+) or (-) to make a selection. Press and release any preset button to play the track.

2010 Models

+ TUNE -	90's Music **My iPod** On-The-Go

© 2009 Polaris Sales Inc.

XM RADIO

About XM Radio

XM is North America's number one satellite radio company, offering an extraordinary variety of commercial-free music, plus the best in premier sports, news, talk radio, comedy, children's and entertainment programming, broadcast in superior digital audio quality coast to coast.

For more information, or to subscribe, U.S. customers visit xmradio.com or call XM Listener Care at 1-800-XMRADIO (1-800-967-2346); Canadian customers visit xmradio.ca or call XM Listener Care at 1-877-GETXMSR (1-877-438-9677).

XM Ready® Legal

XM monthly service subscription sold separately. XM Mini-Tuner and Home Dock required (each sold separately) to receive XM service. It is prohibited to copy, decompile, disassemble, reverse engineer, hack, manipulate or otherwise make available any technology or software incorporated in receivers compatible with the XM satellite Radio System. Installation costs and other fees and taxes, including a one-time activation fee may apply. All fees and programming subject to change. Channels with frequent explicit language are indicated with an XL. Channel blocking is available for XM radio receivers by calling 1-800-XMRADIO (U.S.residents) and 1-877-GETXMSR (Canadian residents). Only available in the 48 contiguous United States and Canada. ©2007 XM Satellite Radio Inc. All rights reserved.

XM Ready® Subscription

Once you have installed the XM Mini-Tuner Home Dock, inserted the XM Mini-Tuner, connected the XM Mini-Tuner Home Dock to your XM Ready audio system, and installed the antenna, you are ready to subscribe and begin receiving XM programming. There are three places to find your eight character XM Radio ID: On the XM Mini-Tuner, on the XM Mini-Tuner package, and on XM Channel 0. Record the Radio ID below for reference.

Record the Radio ID below for reference:

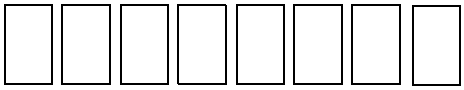

NOTE: The XM Radio ID does not use the letters "I", "O", "S" or "F".

Activate your XM Satellite Radio service in the U.S. online at http://activate.xmradio.com or call 1-800-XMRADIO (1-800-967-2346). Activate your XM Satellite Radio service in Canada online at https://activate.xmradio.ca or call 1-877-GET-XMSR (1-877-438-9677). You will need a major credit card. XM will send a signal from the satellites to activate the full channel lineup. Activation normally takes 10-15 minutes, but during peak busy periods you may need to keep your XM Ready audio system on for up to an hour. When you can access the full lineup on your XM Ready audio system you are done.

GETTING STARTED - XM Radio

The ignition key must be in the ACC or ON position to use the XM radio.

NOTE: To prevent battery drain, do not leave the key in the ACC position for long periods.
Victory recommends using the audio system only when the engine is running.

Press the power button to turn the audio system on.

Press and release the S/E button on the left control, or SRC on the console panel, until the XM radio is the active source.

When the XM Radio is active, the console screen will display:
(2008-2009) the XM radio channel, and either the song artist's name or the name of the current song;
(2010) XM will appear in the display as the active source with the channel number, preset number (if applicable), the channel name or category, the artist, and song title.

2008-2009 Display

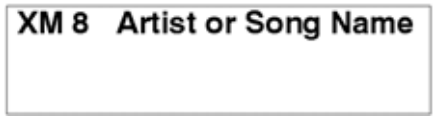

2010 Display

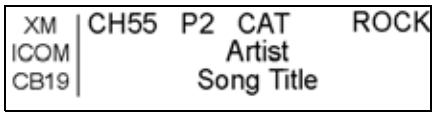

© 2009 Polaris Sales Inc.

XM RADIO RECEPTION

If XM radio is not receiving a signal due to being indoors (or any overhead obstruction) “No Sgnl” appears in the display.

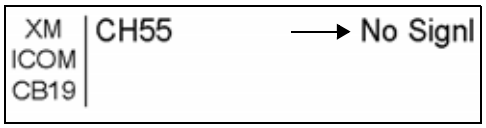

If the XM antenna becomes disconnected, “Antenna” appears in the display.

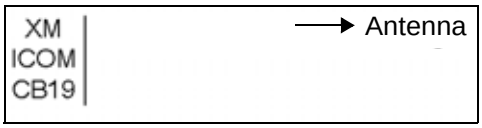

XM RADIO SPECIFIC MENU OPTIONS

The XM radio system has unique menus that apply only to this system when XM radio is the active source.

Some Audio System settings such as BASS, TREBLE, FADER, etc., apply to both the audio system and the XM radio system.

Menus specific to the XM radio system are:

XM Display (You can select CATEGORY or CHANNEL NAME to be displayed)

XM Category (Rock, Country, Traffic, Sports, Talk News, All Channels, etc.)

XM Tune Mode* (You can set channel search to SEEK channels or SCAN channels)

* The XM TUNE MODE is unique to the XM radio system. Audio System SEEK / SCAN setting will not affect the XM channel search setting.

XM RADIO SETTINGS

(2010 Models)

To access XM specific menus, turn the audio system power ON and change the active source to XM using the SRC button on the console.

Press the MODE button on the console repeatedly to toggle to the XM DISPLAY menu.

Press (+) or (-) on the console panel to select CATEGORY or CHANNEL NAME.

In the CATEGORY mode, the category of a selected station will display in the upper right corner of the screen.

In CHANNEL NAME mode, the name of the selected channel will display.

XM CATEGORY SELECTION

With audio system power ON and XM as the active source, use the MODE button on the console to scroll to the XM Category menu.

Press TUNE (+) or TUNE (-) button on the left control to change the category.

© 2009 Polaris Sales Inc.

XM CHANNEL SELECTION

Press TUNE (+) or TUNE (-) button on the left control to change the channel.

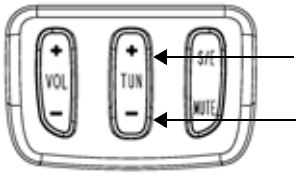

The ALL CHANNELS category must be selected to scroll through every available channel in numerical order.

If a specific category (other than ALL CHANNELS) is selected, only channels within that category will be selected with the TUNE button.

NOTE: If a Preset button is used to select a channel that is not within the currently selected category and the TUNE + / - button is used to change the channel, it will tune stations within the previously selected category, not within the category of the Preset station.

EXAMPLE:

Country is the selected category.

Preset 6 is used to switch to a channel within the Rock category.

Pressing TUNE + / - on the lower left control will continue to only select stations available in the Country category.

NAV MP3

BEFORE YOU BEGIN - NAV MP3

Here are a few helpful tips for VICTORY VISION motorcycles equipped with the Garmin® zumo® 660 NAV MP3 player and the Audio Integration Kit.

- Be sure to read the Owner's Manual and all information included with your Garmin® zumo® 660 to become familiar with the operation of and access to all available features.
- The Audio Integration kit must be installed to enable outputs from the NAV MP3 (such as navigation instructions or user-loaded MP3 media files) to play through the headsets or the speakers.
- The NAV MP3 unit is fully functional without the Audio Integration kit installed, but there will be no interface with the audio system on the motorcycle.
- Review general Audio system operation information beginning on page 1.34 to set the Aux Mode

TIPS FOR OPERATION

Signal Priority

- Signals coming from the NAV MP3 unit will override any source of the motorcycle's audio system to ensure navigation instructions are communicated when needed. Navigational instructions will also override the MP3 player.

Volume Settings - IMPORTANT!

- You must set volume levels within the NAV MP3 unit. Volume settings in the motorcycle's audio system control NAV MP3 volume, but navigation instructions may be difficult to hear if volume levels in the unit are set too low. See the GARMIN information for setting procedures.

Recommended initial setting are:

MASTER - 100%

NAVIGATION - 90%

MEDIA - 90%

© 2009 Polaris Sales Inc.

To switch to the radio when the MP3 player is in use:

- Pause or stop the MP3 player to switch to radio.

To switch from radio to the MP3 player:

- Change the active source to AUX
- For best sound quality, change the AUX MODE setting on the radio to NAV MP3 when listening to the MP3 player in the NAV unit. Audio works in the AUX setting, but the levels are not optimized.
- Refer to *Getting Started* (below) for instructions on how to change the active source to AUX and the AUX Mode to NAV MP3.
- If playing MP3 files from the Garmin® zumo® 660 unit, you may need to turn down the “MEDIA VOLUME” on the Garmin unit to avoid distortion.

GETTING STARTED - NAV MP3

The ignition key must be in the ACC or ON position to use the NAV MP3 player.

NOTE: To prevent battery drain, do not leave the key in the ACC position for long periods.
Victory recommends using the audio system only when the engine is running.

Press the power button to turn the audio system on.

Press and release the S/E button on the lower LH control or SRC on the console panel until AUX is the active source, then set the AUX MODE to NAV MP3.

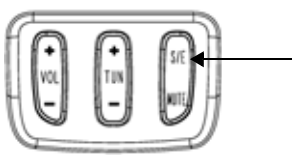

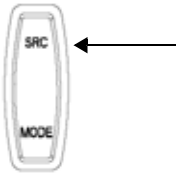

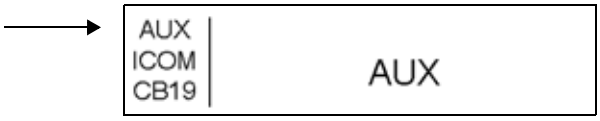

CHANGING AUX MODE TO NAV MP3

There are two AUX Modes available:

AUX (iPod) and...
NAV MP3

Press the MODE button on the console panel repeatedly to toggle to the AUX mode.

Press the console panel (+) or (-) button to set the mode to AUX (for iPod or any other MP3 player use) or to NAV MP3 for navigation unit MP3 player use.

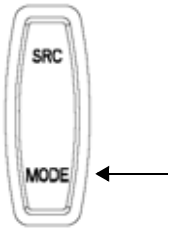

© 2009 Polaris Sales Inc.

CD CHANGER (2008-2009)

Getting Started

The ignition key must be in the ACC or ON position to use the CD changer.

With the key in the ACC or ON position and audio system OFF, the screen will display "VICTORY MOTORCYCLES".

NOTE: To prevent battery drain, do not leave the key in the ACC position for long periods. Victory recommends using the audio system only when the engine is running.

Press the **power button** to turn the audio system on.

Press and release the **S/E** button on the lower LH control...

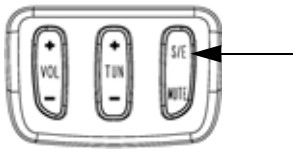

...or **SRC** on the console panel until the **CD changer** is active.

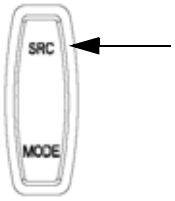

When the **CD changer** is active, the console screen will display the

CD 1	TRK4	0:04

CD Player Cartridge

1. With ignition switch ON or in ACC, open the CD changer door.
2. Press the EJECT button.
3. Remove the CD cartridge from the CD player.
4. Slide one of 10 trays out of the cartridge. Insert a CD (data side down) into the tray.
5. Slide the tray back into the cartridge.
6. Carefully insert the cartridge back into the CD player.
7. Close and latch the CD player door.

Selecting CDs

The CD changer can hold up to 10 CDs. Each CD can be accessed by using the console preset buttons.

Press and release one of the console preset buttons (P1 - P10) to access a CD.

If no disc is located in the location pressed, the CD changer will move to the next highest disc location until a disc is found.

If preset buttons P11 or P12 are pressed, "**NO DISC**" will be shown on the console display.

NO DISC		
CB19	TX	ICOM

When a disc is found, the disc number (A), track number (B), and track time duration (C) will be shown on the console display screen.

(A)	(B)	(C)
CD6	TRK 12	11:20
CB19	TX	ICOM

CD Track Selection

Press and release TUNE (+) or (-) button to move forward or reverse 1 track on the CD.

Press and hold TUNE (+) or (-) button to fast forward or fast reverse through a CD track.

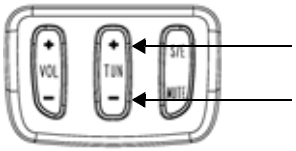

© 2009 Polaris Sales Inc.

REFERENCE

SAE TAP DRILL SIZES

Thread Size/ Drill Size		Thread Size / Drill Size	
#0-80	3/64	1/2-13	27/64
#1-64	53	1/2-20	29/64
#1-72	53	9/16-12	31/64
#2-56	51	9/16-18	33/64
#2-64	50	5/8-11	17/32
#3-48	5/64	5/8-18	37/64
#3-56	45	3/4-10	21/32
#4-40	43	3/4-16	11/16
#4-48	42	7/8-9	49/64
#5-40	38	7/8-14	13/16
#5-44	37	1-8	7/8
#6-32	36	1-12	59/64
#6-40	33	1 1/8-7	63/64
#8-32	29	1 1/8-12	1 3/64
#8-36	29	1 1/4-7	1 7/64
#10-24	24	1 1/4-12	1 11/64
#10-32	21	1 1/2-6	1 11/32
#12-24	17	1 1/2-12	1 27/64
#12-28	4.6mm	1 3/4-5	1 9/16
1/4-20	7	1 3/4-12	1 43/64
1/4-28	3	2-4 1/2	1 25/32
5/16-18	F	2-12	1 59/64
5/16-24	I	2 1/4-4 1/2	2 1/32
3/8-16	O	2 1/2-4	2 1/4
3/8-24	Q	2 3/4-4	2 1/2
7/16-14	U	3-4	2 3/4
7/16-20	25/64		

METRIC TAP DRILL SIZES

Tap Size	Drill Size	Decimal Equivalent	Nearest Fraction
3x.50	#39	0.0995	3/32
3x.60	3/32	0.0937	3/32
4x.70	#30	0.1285	1/8
4x.75	1/8	0.125	1/8
5x.80	#19	0.166	11/64
5x.90	#20	0.161	5/32
6x1.00	#9	0.196	13/64
7x1.00	16/64	0.234	15/64
8x1.00	J	0.277	9/32
8x1.25	17/64	0.265	17/64
9x1.00	5/16	0.3125	5/16
9x1.25	5/16	0.3125	5/16
10x1.25	11/32	0.3437	11/32
10x1.50	R	0.339	11/32
11x1.50	3/8	0.375	3/8
12x1.50	13/32	0.406	13/32
12x1.75	13/32	0.406	13/32

DECIMAL EQUIVALENTS

1/64		.0156	
	1/32	.0312	1 mm = .0394"
3/64		.0469	
	1/16	.0625	
5/64		.0781	2 mm = .0787"
	3/32	.0938	
7/64		.1094	3 mm =.1181"
	1/8	.1250	
9/64		.1406	
	5/32	.1563	4 mm = .1575"
11/64		.1719	
	3/16	.1875	5mm = .1969"
13/64		.2031	
	7/32	.2188	
15/64		.2344	6 mm = .2362"
	1/4	.25	
17/64		.2656	7 mm = .2756"
	9/32	.2813	
19/64		.2969	
	5/16	.3125	8mm = .3150"
21/64		.3281	
	11/32	.3438	9 mm = .3543"
23/64		.3594	
	3/8	.375	
25/64		.3906	10 mm = .3937"
	13/32	.4063	
27/64		.4219	11 mm =.4331"
	7/16	.4375	
29/64		.4531	
	15/32	.4688	12 mm = .4724"
31/64		.4844	
	1/2	.5	13mm = .5118"
33/64		.5156	
	17/32	.5313	
35/64		.5469	14 mm = .5512"
	9/16	.5625	
37/64		.5781	15 mm = .5906"
	19/32	.5938	
39/64		.6094	
	5/8	.625	16mm =. 6299"
41/64		.6406	
	21/32	.6563	17 mm = .6693"
43/64		.6719	
	11/16	.6875	
45/64		.7031	18 mm = .7087"
	23/32	.7188	
47/64		.7344	19 mm = .7480"
	3/4	.75	
49/64		.7656	
	25/32	.7813	20 mm = .7874"
51/64		.7969	
	13/16	.8125	21 mm =.8268"
53/64		.8281	
	27/32	.8438	
55/64		.8594	22 mm = .8661"
	7/8	.875	
57/64		.8906	23 mm = .9055"
	29/32	.9063	
59/64		.9219	
	15/16	.9375	24 mm = .9449"
61/64		.9531	
	31/32	.9688	25 mm = .9843"
63/64		.9844	
	1	1.0	

© 2009 Polaris Sales Inc.

FAHRENHEIT TO CELSIUS

^{o}C to ^{o}F: 9 (^{o}C + 40) ÷ 5 - 40 = ^{o}F

^{o}F to ^{o}C: 5 (^{o}F + 40) ÷ 9 - 40=^{o}C

DEGREES F	DEGREES C
32	0
41	5
50	10
59	15
68	20
77	25
86	30
95	35
104	40
113	45
122	50
131	55
140	60
149	65
158	70
167	75
176	80
185	85
194	90
203	95
212	100

MEASUREMENT CONVERSION CHART

UNIT OF MEASURE	MULTIPLIED BY	CONVERTS TO
ft-lb	x 12	= in-lb
in-lb	x.0833	= ft-lb
ft-lb	x 1.356	= Nm
in-lb	x.0115	= kg-m
Nm	x.7376	= ft-lb
kg-m	x 7.233	= ft-lb
kg-m	x 86.796	= in-lb
kg-m	x 10	= Nm
in	x 25.4	= mm
mm	x.03937	= in
in	x 2.54	= cm
mile	x 1.6	= km
km	x.6214	= mile
Ounces (oz)	x 28.35	= grams (g)
grams (g)	x.035	= Ounces (oz)
cc's	x.03381	= Fluid Ounces (oz)
lbs	x.454	= kg
kg	x 2.2046	= lbs
Cubic Inches	x 16.387	= Cubic Centermeters
Cubic Centimeters	x.061	= Cubic Inches
Imperial pints	x.568	= liters (l)
liters (l)	x 1.76	= Imperial pints
Imperial quarts	x 1.137	= liters (l)
liters (l)	x.88	= Imperial quarts
Imperial quarts	x 1.201	= US quarts
US quarts	x.833	= Imperial quarts
US quarts	x.946	= liters
liters	x 1.057	= US quarts
US gallon	x 3.785	= liter
liter	x.264	= US gallon
Pounds force per square inch (psi)	x 6.895	= Kilo pascals (kPa)
Kilo pascals (kPa)	x.145	= Pounds force per square inch (psi)

© 2009 Polaris Sales Inc.

CHAPTER 2
MAINTENANCE

SERVICE SPECIFICATIONS 2.2
TUNE UP 2.2
OIL CHANGE 2.2
FASTENER TORQUE SPECIFICATIONS 2.3
SPECIAL TOOLS 2.3
MAINTENANCE PRODUCTS 2.4
PERIODIC MAINTENANCE 2.5
PERIODIC MAINTENANCE INTERVAL TABLE 2.5
AIR FILTER / AIR BOX DRAIN HOSE 2.6
ENGINE OIL LEVEL 2.6
ENGINE OIL AND FILTER CHANGE 2.7
REVERSE IDLER SHAFT 2.7
IDLE SPEED / FAST IDLE SPEED 2.8
TIRE PRESSURE 2.8
THROTTLE CABLE INSPECTION / LUBRICATION / FREE PLAY 2.9
CRUISE CONTROL CABLE 2.10
FRONT BRAKE LEVER 2.10
FRONT BRAKE LEVER REACH / LEVER RESERVE 2.11
CLUTCH LEVER LUBRICATION (HYDRAULIC) 2.11
CLUTCH PULL ROD BUSHING LUBRICATION (HYDRAULIC) 2.12
CLUTCH LEVER LUBRICATION (CABLE) 2.12
CLUTCH LEVER FREE PLAY (CABLE) 2.13
CLUTCH FLUID 2.13
BRAKE FLUID LEVEL 2.14
BRAKE PAD INSPECTION 2.15
SHIFT PEDAL / BRAKE PEDAL 2.16
CRANKCASE VENTILATION / EVAPORATIVE EMISSION CONTROL 2.16
FUEL TANK VENT INSPECTION (49 STATE) 2.16
FUEL FILTER / FUEL SYSTEM INSPECTION 2.17
SPARK PLUG 2.18
BATTERY 2.19
BATTERY REMOVAL / INSTALLATION 2.20
ENGINE COMPRESSION TEST / CYLINDER LEAKAGE 2.21
SPROCKET INSPECTION 2.21
DRIVE BELT CLEANING 2.21
DRIVE BELT WEAR ANALYSIS / CONDITION 2.22
DRIVE BELT TENSION INSPECTION 2.23
DRIVE BELT ADJUSTMENT / ALIGNMENT 2.24
HEADLAMP AIM INSPECTION / ADJUSTMENT 2.26
SIDESTAND INSPECTION / SIDESTAND PAD INSPECTION 2.27
SIDESTAND & SPRING REMOVAL 2.27
SIDESTAND PAD REPLACEMENT 2.28
REAR SUSPENSION / SWINGARM INSPECTION 2.29
REAR SUSPENSION ADJUSTMENT 2.30
FRONT SUSPENSION INSPECTION 2.31
STEERING HEAD / FRONT WHEEL INSPECTION 2.31
FUSE REPLACEMENT 2.32
FASTENERS 2.32
IGNITION SWITCH AND LOCKS 2.32
CLEANING, WASHING, WAXING, POLISHING, APPLYING PROTECTANTS 2.33
STORAGE 2.34

© 2009 Polaris Sales Inc.

SERVICE SPECIFICATIONS

TUNE UP

ITEM	SPECIFICATION (2008 - 2010)
Brake Pedal Freeplay (Rear)	1-2mm (.031") Gap At Pedal Stop
Brake Lever Reserve (Front)	See test procedure page 15.44.
Brake Pad Friction Material Thickness (All)	1.0 mm (.039 inch) Minimum
Clutch Lever Freeplay (Hydraulic)	-
Clutch Lever Freeplay (Cable)	.5 - 1.5mm (.020-.060")
Compression Pressure (Cylinder)	210-225 (1448-1551 kPa) (page 2.21)
Drive Belt Deflection: 2008-2010 (All Models Except 2010 Vision 8-Ball & Ness) (See page 2.23)	32 mm +/- .5mm (1 1/4" +/- 1/64) with 10 lb force
Drive Belt Deflection: 2010 Vision 8-Ball & Ness (See page 2.23)	15 mm +/- .5mm (19/32" +/- 1/64) with 10 lb force
Drive Belt Frequency (Using Sonic Tension Meter) (See page 2.23 for required data)	Frequency: (All except 2010 8-Ball & Ness) 20 Hz +/- 1 Hz Frequency: (2010 8-Ball & Ness) 26 Hz +/- 1 Hz
Idle Speed / Fast Idle Speed	NOT ADJUSTABLE (ECM / IAC valve controlled) (See page 2.8)
Oil Pressure, Lubrication @ 3000 rpm	552 kPa (80 psi) (Minimum 40 psi)
Oil Pressure, Cooling @ 3000 rpm	(See special notes Chapter 4)
Rear Shock Air Pressure	See page 2.30 or decal in LH saddlebag
Spark Plug Type / Gap	NGK DCPR6E / .8 mm (.032")
Throttle Cable Freeplay	2 - 4 mm (5/64 - 5/32") (page 2.9)
Tire Pressure	Refer to page 2.8 or decal on motorcycle (2008-2009 in left saddlebag; 2010 - on Manufacturing Decal under console cover)

OIL CHANGE

Start the engine and warm it up for several minutes. While warming up, check for oil leaks. If any leaks are found, stop the engine immediately and determine the source of the problem before starting the engine again.

TIGHTENING TORQUE	
Drain Plug (new sealing washer)	20 Nm (15 ft. lbs.)
Oil Filter	3/4 full turn after contacting seal surface

OIL TYPE / QUANTITY	
Oil Type	Victory Semi-Synthetic 20W40 Engine Oil
Oil Capacity (Oil & Filter Change)	Approximately 4.25 liters (4.5 quarts)
Oil Capacity (Dry)	Approximately 4.75 liters (5.0 quarts)

Use Victory 20W40 Synthetic Blend 20W40 engine oil for all temperatures. If Victory oil is not available, use a high quality 20W40 motorcycle designed for use with wet clutches (such as those with a JASO MA rating).

NOTICE
Do not put chemical additives in the oil. Victory motorcycle oil has been specially designed for this application. Additional additives are not necessary and have not been approved by Victory Engineering.

© 2009 Polaris Sales Inc.

FASTENER TORQUE SPECIFICATIONS

MAINTENANCE ITEMS

DESCRIPTION	TORQUE		APPLY / NOTES
	N-m	Lb-ft (Lb-in)	
Air Filter Mount Screws	9.8	(87)	
Axle Nut, Rear	88	65	
Axle Adjuster Nut, Rear	10.8	(96)	Tighten Axle First
Battery Terminal Bolts	4.5	(40)	Dielectric Grease
Battery Cover Bolt	10	(85)	
Battery Cable To Solenoid or Starter Motor	6.8	(60)	Dielectric Grease
Brake Lever Pivot Screw (Front)	1.0	(9)	
Brake Lever Pivot Screw Nut (Front)	6.0	(52)	
Circuit Breaker Terminal Nut (Main Breaker)	2.8	(25)	
Clutch Lever Pivot Screw (Hydraulic)	1.0	(9)	
Clutch Lever Pivot Nut	6	(52)	
Drive Sprocket Nut	244	180	Loctite™ 262
Drive Sprocket Nut Retainer Plate Screws	10	(85)	
Exhaust / Muffler	Refer to Chapter 3		
Floorboard Assembly to Frame	47.5	35	
Oil Drain Plug	20	15	12x1.5mm
Oil Filter	3/4 Turn Past Gasket Contact		
Reverse Idler Shaft Lubrication Access Screw	6.8	(60)	
Seat	4	(36)	
Side Stand Pivot Bolt & Nut	47.5	35	
Spark Plug	14.5-19.5	10.8-14.5	Anti-seize compound
Swingarm Pivot Shaft	88	65	

SPECIAL TOOLS

MAINTENANCE TOOLS

- Belt Tension Gauge PV-43532 (Sonic Tension Meter is optional and commercially available)
- Spanner Wrench - PV-46993
- Compression Gauge Set PV-33223
- Victory Air Pump & Gauge 2876654 or PV-48909

© 2009 Polaris Sales Inc.

MAINTENANCE PRODUCTS

LUBRICANTS / CHEMICALS

MAINTENANCE PRODUCT PART NUMBERS

Product	Part Number
All Purpose Grease	2872187
Brake Cleaner	2872191
Brake Fluid, DOT 4	2872189
Carb and Throttle Body Cleaner, 13 oz. Aerosol	2872890
Dielectric Grease (Nyogel™)	2871329
Electrical Contact Cleaner	2872864
Fork Oil - Cartridge Forks - Vision TYPE 1 (MARZ) (All 2008 and some 2009)	2874828
Fork Oil - Cartridge Forks - Vision TYPE 2 (KYB) (Some 2009 and all 2010)	2874568
Fuel Additive, Carbon Clean	2872190
Fuel Stabilizer	2872280
Hand Grip Adhesive (Three Bond 1501) (10ml tube)	2872575
Loctite 262™ (50cc Tube)	2871951
Moly Assembly Paste	2871460
Multi-Purpose Lubricant	2872863
Oil Change Kit	2873551
Paint Detail Kit - Polish, Wax, and Dressing (also see www.purevictorypolishes.com)	2872195
Paint Restore Polish, 12 oz. Aerosol	2872192
Paint Wax and Final Finish	2872193
Primer N™ (25g Aerosol)	2870585
Semi-Synthetic 20W/40 Engine Lubricant	2872175 (Quart) 2872176 (Gallon)
Vinyl and Rubber Dressing	2872194

© 2009 Polaris Sales Inc.

PERIODIC MAINTENANCE

Periodic Maintenance Interval Table

ENGINE	ODOMETER READING in MILES (KILOMETERS)																					
Component (see operation codes below)	**PAGE**	**500 (800)**	**2,500 (4,000)**	**5000 (8,000)**	**7,500 (12,000)**	**10,000 (16,000)**	**12,500 (20,000)**	**15,000 (24,000)**	**17,500 (28,000)**	**20,000 (32,000)**	**22,500 (36,000)**	**25,000 (40,000)**	**27,500 (44,000)**	**30,000 (48,000)**	**32,500 (52,000)**	**35,000 (52,000)**	**37,500 (60,000)**	**40,000 (64,000)**	**42,500 (68,000)**	**45,000 (72,000)**	**47,500(76,000)**	**50,000 (80,000)**
Air Filter	2.6	I	I	I	I	R	I	I	I	R	I	I	I	R	I	I	I	R	I	I	I	R
Crankcase Vent System	2.16	I		I		I		I		I		I		I		I		I		I		I
Drive Belt	2.23	I	I	I	I	I	I	I	I	I	I	I	I	R	I	I	I	I	I	I	I	I
Engine Compression	2.21	I				I				I				I				I				I
Engine Oil*	2.7	R	R	R	R	R	R	R	R	R	R	R	R	R	R	R	R	R	R	R	R	R
Engine Oil Filter*	2.7	R	R	R	R	R	R	R	R	R	R	R	R	R	R	R	R	R	R	R	R	R
Evaporative Emission	2.16	I		I		I		I		I		I		I		I		I		I		I
Exhaust System	Ch. 3	I	I	I	I	I	I	I	I	I	I	I	I	I	I	I	I	I	I	I	I	I
Fuel Filter	2.17																					R
Fuel System	2.17	I	I	I	I	I	I	I	I	I	I	I	I	I	I	I	I	I	I	I	I	I
Reverse Idler Shaft	2.7	I	L	L	L	L	L	L	L	L	L	L	L	L	L	L	L	L	L	L	L	L
Spark Plugs	2.18	I		I		I		I		I		I		R		I		I		I		I
Throttle / Cruise Cable End	2.9	I	I	I	I	L	I	I	I	L	I	I	I	L	I	I	I	L	I	I	I	L
CHASSIS	ODOMETER READING in MILES (KILOMETERS)																					
Battery	2.19	I		I		I		I		I		I		I		I		I		I		I
Brake Fluid**	2.14	I	I	I	I	I	I	I	I	I	I	I	I	R	I	I	I	I	I	I	I	I
Brake Pads	2.15	I	I	I	I	I	I	I	I	I	I	I	I	I	I	I	I	I	I	I	I	I
Cable (Ends)	2.9	I	I	I	I	L	I	I	I	L	I	I	I	L	I	I	I	L	I	I	I	L
Clutch Fluid**	2.13	I	I	I	I	I	I	I	I	I	I	I	I	R	I	I	I	I	I	I	I	I
Clutch and Brake Lever	2.10	L	L	I	L	I	L	I	L	I	L	I	L	I	L	I	L	I	L	I	L	I
Fasteners	2.32	I		I		I		I		I		I		I		I		I		I		I
Front Fork Oil**	2.31	I		I		I		R		I		I		R		I		I		R		I
Front Forks and Front Axle	2.31	I		I		I		I		I		I		I		I		I		I		I
Gear Shift Pedal	2.16	I		I		L		I		L		I		L		I		L		I		L
Headlamp	2.26	I				I				I				I				I				I
Ignition Switch & Locks	2.32			L		L		L		L		L		L		L		L		L		L
Radio / Radio Software	19.36	Update software annually																				
Rear Brake Pedal	2.16	I		I		L		I		L		I		L		I		L		I		L
Rear Shock Absorber	2.29	I	I	I	I	I	I	I	I	I	I	I	I	I	I	I	I	I	I	I	I	I
Rear Wheel Alignment	2.24	I		I		I		I		I		I		I		I		I		I		I
Road Test	-	P	P	P	P	P	P	P	P	P	P	P	P	P	P	P	P	P	P	P	P	P
Sidestand	2.27	I		I		L		I		L		I		L		I		L		I		L
Sidestand Pad	2.27	I	I	I	I	I	I	I	I	I	I	I	I	I	I	I	I	I	I	I	I	I
Steering Bearings	2.31	I	I	I	I	I	I	L	I	I	I	I	I	L	I	I	I	I	I	L	I	I
Suspension, Rear, Rocker	2.29	I		I		I		L		I		I		L		I		I		L		I
Swing Arm and Rear Axle	2.29	I		I		I		I		I		I		I		I		I		I		I
Tires / Wheels	2.8	I	I	I	I	I	I	I	I	I	I	I	I	I	I	I	I	I	I	I	I	I

Operation Codes:

I-Inspect (tighten, clean, adjust, correct or replace if necessary) **R-**Replace/Rebuild **P-**Perform
L-Lubricate with proper lubricant

*Replace at specified interval or annually **Replace at specified interval or every 2 years

© 2009 Polaris Sales Inc.

AIR FILTER

The standard Victory air filter element is a dry paper design - do not apply air filter oil.

1. Remove (2) screws (A).

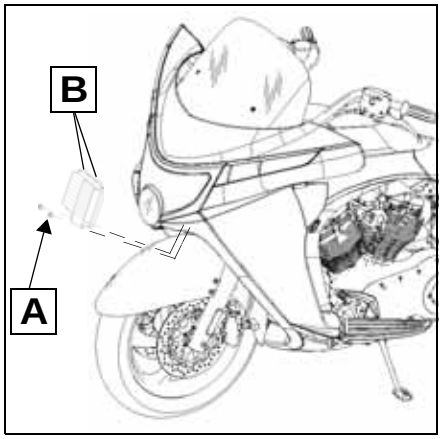

2. Pull lower edge of filter toward front of motorcycle then lower it to release two tabs (B) at top edge. Remove filter.
3. Clean filter sealing surface on frame.
4. Install new air filter, engaging tabs at top edge of filter with filter case.
5. Install retaining screws.
6. Torque screws to 87 lb- in. (10 Nm).

AIR BOX DRAIN HOSE

Check drain hose for fluid sediment whenever air filter is inspected or serviced.

1. Pull hose out from behind left leg fairing.
2. Remove plug (C) and drain any liquid into a waste oil container. Dispose of properly.
3. Install plug and place hose behind left leg fairing.

ENGINE OIL LEVEL

1. Warm the engine for several minutes until operating temperature is reached.
2. Stop engine and wait for 3-5 minutes.
3. Place the machine on a level area and hold it in an upright position.
4. Remove and clean the oil off of the dipstick (D).

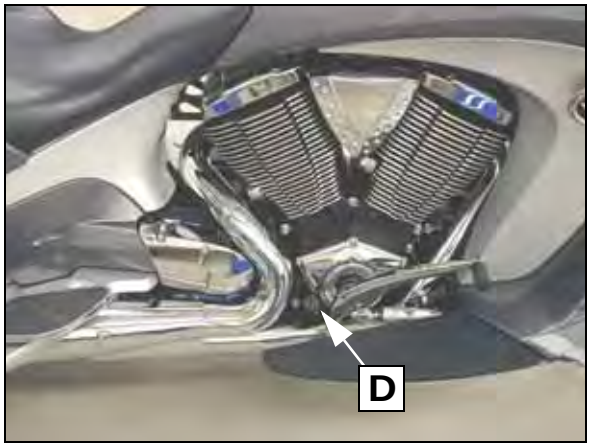

5. Screw the dipstick in until seated.
6. Remove dipstick and view oil level.
7. Oil level should be between ADD and FULL lines on dipstick. If oil level is low, add Victory 20-40 Semi-Synthetic engine oil to raise level to FULL mark. DO NOT overfill.

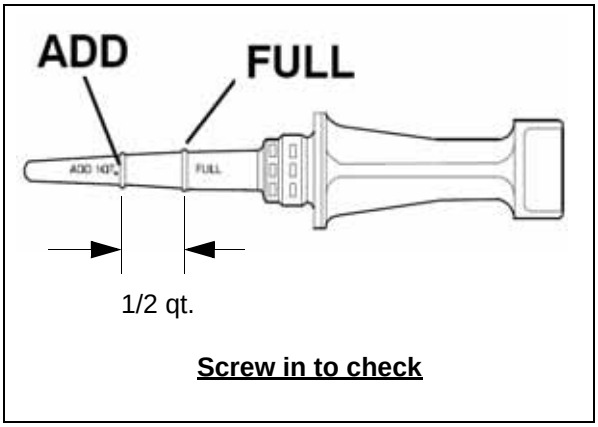

© 2009 Polaris Sales Inc.

ENGINE OIL AND FILTER CHANGE

Change engine oil at intervals listed in the Periodic Maintenance Table.

1. Start and run engine until it reaches normal operating temperature. Stop engine.
2. Securely support motorcycle on sidestand.
3. Place an oil drain pan under the drain plug (A) and oil filter (B).

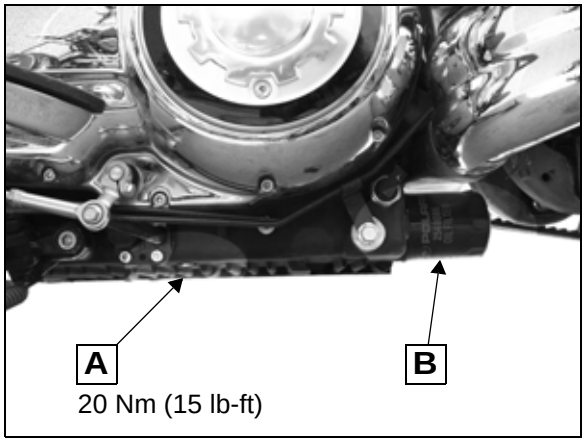

4. Remove drain plug (6mm Allen wrench) and allow oil to drain completely.
5. Remove oil filter with a 2 1/2 inch (63.5 mm) filter wrench.
6. Clean drain plug sealing surface on crankcase. Remove old seal washer from drain plug and install a new one.
7. Install drain plug and tighten to proper torque. DO NOT overtighten.
8. Clean oil filter gasket sealing surface on crankcase.
9. Make sure new oil filter gasket is properly seated in the new oil filter, and apply a thin film of clean engine oil to the gasket. Screw new filter on until gasket contacts the filter mounting plate. Tighten filter by hand an additional 3/4 turn.
10. Add *approximately* **4.5 quarts (4.25 liters)** of oil through dipstick hole. Use only Victory brand Semi-Synthetic 20W-40 Motor Oil or equivalent oil for use with wet clutches such as JASO MA rating.

> NOTICE
>
> Do not add chemical additives to the engine oil. Some automotive engine oils contain additives that could damage or reduce the service life of the wet clutch in the motorcycle.

11. Reinstall dipstick. Start and run engine until it reaches normal operating temperature.

NOTE: After an oil change, the low oil pressure indicator light could remain on longer than usual. Do not rev the engine while the light is on. If light does not go out within 5 seconds of starting the engine, stop the engine immediately and investigate.

12. Stop engine and make sure there are no leaks around the drain plug and oil filter.
13. Check oil level and adjust if needed.

NOTICE: Recycle used oil and filter in accordance with local regulations.

ENGINE OIL CAPACITY AT CHANGE (WITH FILTER)	**Approx. 4.5 qt. (4.25 liter)**
ENGINE OIL CAPACITY AT CHANGE (WITHOUT FILTER)	Approx. 4.0 qt. (3.75 - 4.0 liter)

REVERSE IDLER SHAFT LUBRICATION

On motorcycles equipped with Reverse, lubricate the reverse idler shaft at every oil change or as required for proper reverse actuator lever movement.

1. Remove access bolt (A).
2. Spray Victory Multi-Purpose spray lubricant (2872863) into center of shaft for 2-3 seconds while moving the Reverse actuator lever up and down through the travel range until it operates smoothly and freely.
3. Install screw and torque to 6.8 Nm (60 lb-in.)

© 2009 Polaris Sales Inc.

IDLE SPEED / FAST IDLE SPEED

NOTE: Idle speed is continuously monitored and adjusted by the ECM via the IAC valve. DO NOT tamper with or attempt to “adjust” the throttle plate flow screw (A) or plate stop screw (B)! They are factory pre-set. If idle is erratic or if idle speed is incorrect, refer to troubleshooting in this section to find the cause of the problem. Tampering with these screws will not correct an idle speed or control problem.

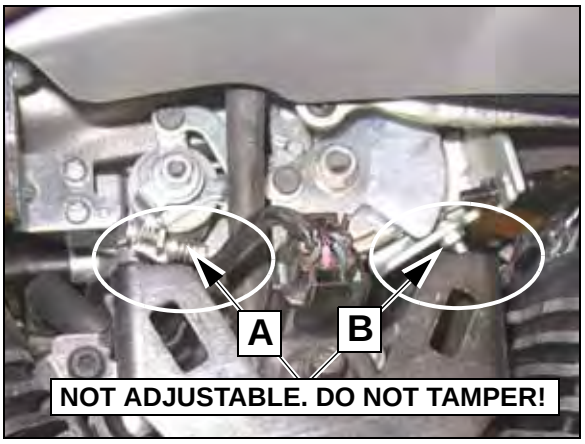

TIRE PRESSURE

NOTE: Refer to the Tire Information label (located inside the left saddlebag on the motorcycle on 2008 and 2009 models) or to the Manufacturing Information label (located under the rear console cover in front of the seat) for more information. Tire pressure should be checked when the tires are cool.

Tire ⇓ Load ⇒	Up to 200 pounds (91 kg) Load	201 (91 kg+) - Max Load Capacity
FRONT: Dunlop Elite 3 130/70R18 63H	36 psi (248 kPa)	38 psi (262 kPa)
REAR: Dunlop Elite 3 180/60R16 M/C 80H	38 psi (262 kPa)	40 psi (276 kPa)

TIRE INSPECTION

⚠ WARNING

Victory motorcycles are produced using the designated tires listed below as original equipment. This includes field testing to ensure stability and superior handling. Use of tires other than original equipment may cause instability. A review of all tire related warnings can be found in Chapter 14.

1. Inspect tires for weather checking, cuts, embedded foreign objects, abnormal wear, and surface damage.
2. Inspect front and rear wheels for damage / runout. Refer to Chapters 12 and 13 for procedure.
3. Measure tread depth at center of tread (C). Measure in 3-4 places equally spaced around the tire and record the smallest measurement.

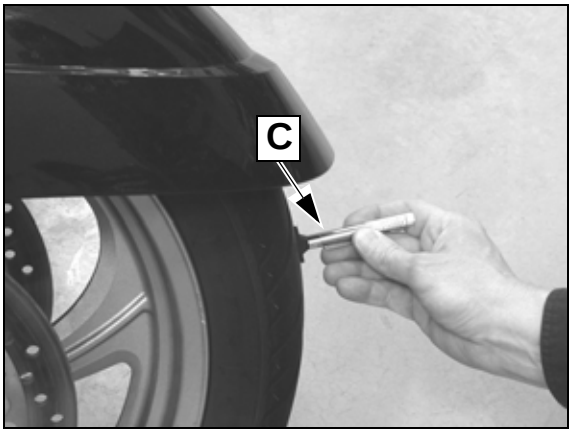

⚠ WARNING

It is dangerous to ride with a worn tire. When a tire reaches the minimum tread depth listed below, replace the tire immediately.

MINIMUM TIRE TREAD DEPTH	
FRONT TIRE MINIMUM TREAD DEPTH	**REAR TIRE MINIMUM TREAD DEPTH**
1.6mm (.063") (1/16 inch)	1.6mm (.063") (1/16 inch)

© 2009 Polaris Sales Inc.

THROTTLE CABLE INSPECTION / LUBRICATION

NOTE: Control cable casings are lined with a low friction sleeve and are factory lubricated for reliable operation. Periodic lubrication of cables is not required and could be detrimental to cable performance. Only cable ends must be periodically inspected and lubricated in accordance with the Periodic Maintenance Schedule (page 2.5).

NOTICE

Do not kink, bend or twist inner cable or cable casing during removal or installation.

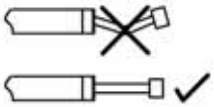

1. Remove triangular IAC cover from right side of motorcycle by pulling straight outward at each corner to release the three tabs.
2. Inspect cables for proper routing, smooth movement, and for damage to the external casing. Inspect the exposed inner cable for fraying, kinks, or corrosion. Replace any damaged cables or cables that are sticky or sluggish to return.
3. Spray each barrel end (A) with Victory Multi Purpose Lubricant 2872863.

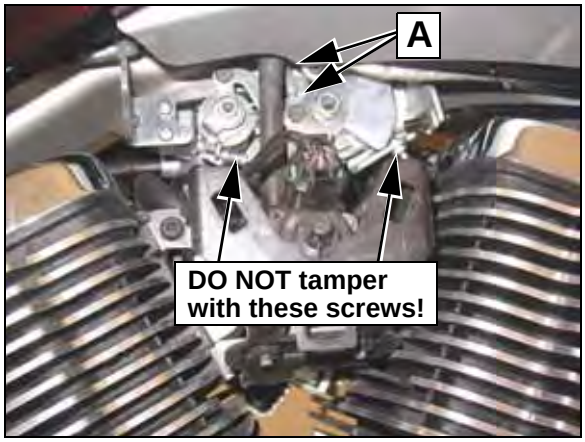

4. After lubricating barrel ends, inspect cable free play.

NOTE: The cruise control cable is not manually adjustable and does not require periodic adjustment. If the cruise control cable, cruise control module, or throttle body is replaced, perform the "Lash Learn" procedure outlined in Chapter 19.

THROTTLE CABLE FREE PLAY

Throttle cable freeplay, the amount of control grip movement from the rest position to the point of cable resistance, should be .080-.160″ (2-4 mm).

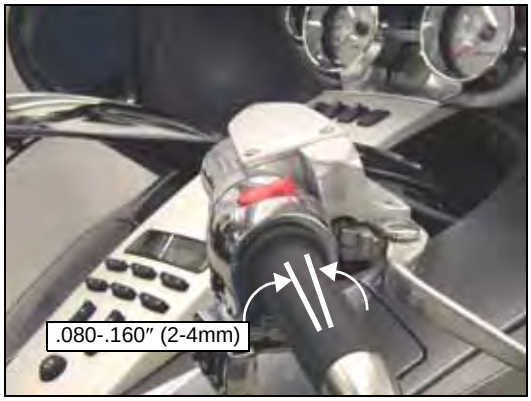

Throttle Cable Freeplay Adjustment Procedure:

Throttle Opening Cable Adjustment

1. With engine OFF and handlebars pointed straight ahead, loosen cable lock nuts by turning them counter-clockwise (viewed from throttle grip) until they stop against the throttle housing.
2. Turn both cable adjusters toward lock nuts until they lightly contact the lock nuts.
3. Turn throttle opening cable adjuster (front cable) out until freeplay is within specified range.
4. Hold adjuster in place and tighten lock securely (by hand) against the adjuster.

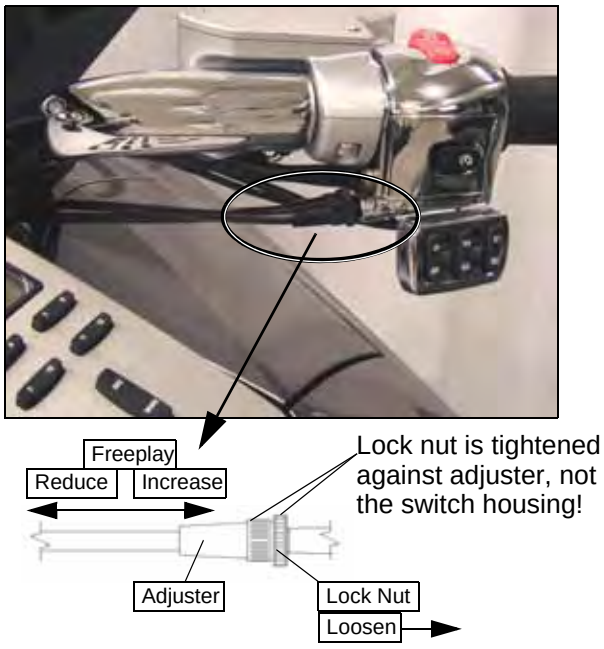

© 2009 Polaris Sales Inc.

Throttle Closing Cable Adjustment

1. Hold throttle grip lightly in closed position.
2. Turn throttle closing cable (rear cable) adjuster out until you feel slight resistance at the adjuster.
3. Hold adjuster in place and tighten lock nut securely (by hand) against the adjuster.
4. Verify throttle grip moves smoothly and returns freely when released in all handlebar positions.

CRUISE CONTROL CABLE

1. Remove triangular IAC cover from right side of motorcycle by pulling straight outward at each corner to release the three tabs.

1. Inspect throttle body end of cruise control cable in area (A) for fraying and be sure end is secured in bracket. Inspect outer cable casing for damage.

2. Inspect exposed inner cable for fraying, kinks, or corrosion. Replace any damaged, frayed or corroded cables.
3. Spray each barrel end with Victory Multi Purpose Lubricant 2872863.

NOTE: The cruise control cable is not manually adjustable and does not require periodic adjustment. If the cruise control cable, cruise control module, or throttle body is replaced, perform the "Lash Learn" procedure outlined in Chapter 19.

FRONT BRAKE LEVER

1. Squeeze the brake lever and release it. The lever should move smoothly without binding and return freely to the rest position.

2. Remove nut (B), pivot screw (C), and lever with pivot bushing. Lubricate screw, bushing, and lever with Victory All Purpose Grease.

3. Assemble lever with bushing and install screw. Torque screw first, then torque nut.

4. Check front brake lever movement before it develops firm resistance. You should feel firm resistance in the lever within the first 19mm (3/4 inch) of brake lever travel, measured at ball end of lever (D).

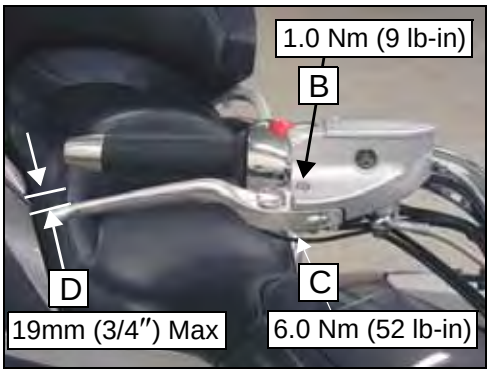

5. Check brake pads as outlined on page 2.15.
6. If brake system was disassembled or purged of air (bled) verify Brake Lever Reserve as outlined on page 2.11.

© 2009 Polaris Sales Inc.

FRONT BRAKE LEVER REACH

Lever “reach” or distance to the hand grip is adjustable. To adjust the front brake lever reach:

- Pull the lever away from the grip (1) and *hold*.
- To INCREASE lever reach distance, turn dial (2) to align a lower number with the arrow (3).
- To DECREASE lever reach distance, turn dial to align a higher number with the arrow.

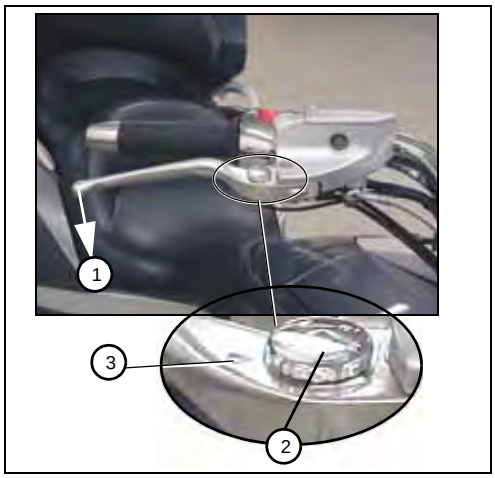

FRONT BRAKE LEVER RESERVE

1. Front brake lever reserve is the minimum pull force required before the brake lever makes contact with the hand grip. Test brake lever reserve whenever brake system bleeding or repairs have been performed. Use PV-50104 and refer to page 15.44 for procedure.

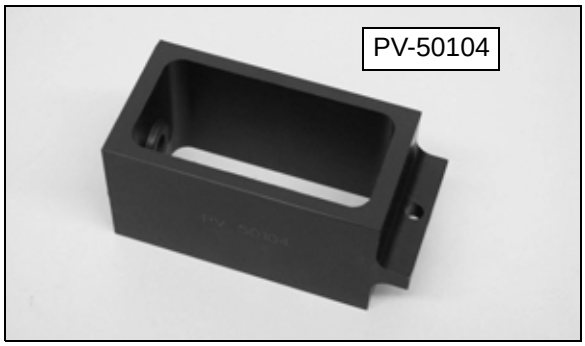

WARNING

Do not operate vehicle if lever contacts hand grip at less than specified pull force. Repeat the bleeding process and repeat the test.

CLUTCH LEVER LUBRICATION (HYDRAULIC)

1. Squeeze the clutch lever to the handlebar and release it. The lever should move smoothly and quietly without binding and return smoothly to the released position.

2. Remove nut (A) and pivot screw (B).

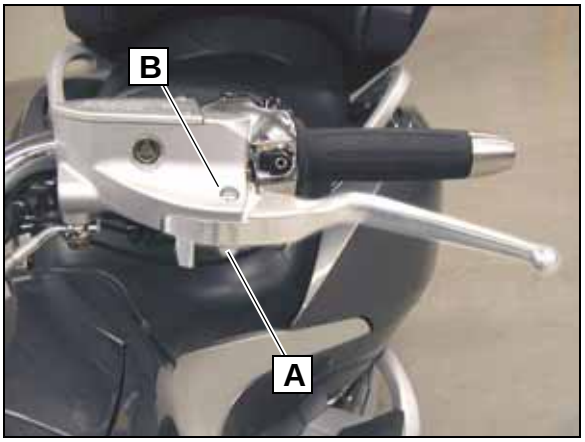

3. Remove lever, clean and inspect parts (C) for wear.

4. Apply Special Grease PN 2203685 (or Moly Assembly Paste PN 2871460) to parts and assemble to master cylinder. If pushrod (D) was removed, assemble with rounded edge inward, against master cylinder piston.

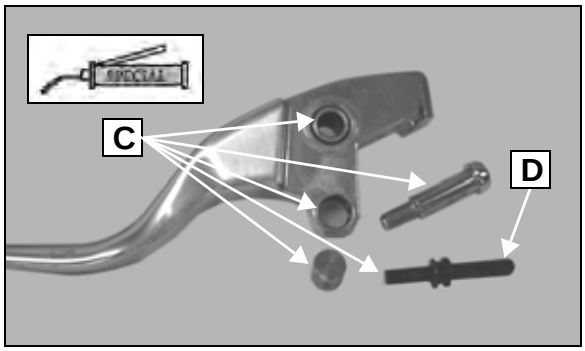

© 2009 Polaris Sales Inc.

5. Tighten pivot screw first, then install and tighten nut.

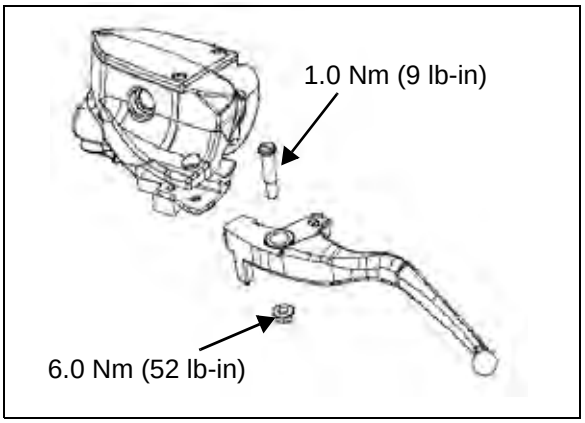

6. Verify proper lever operation.

CLUTCH PULL ROD BUSHING LUBRICATION (HYDRAULIC)

1. Pull clutch lever to handlebar.
2. Using a pliers or adjustable wrench with non-marring jaws, rotate lever arm on primary cover inward until pull rod can be released from lever arm.

NOTE: Use care not to bend pull rod when releasing it from the arm.

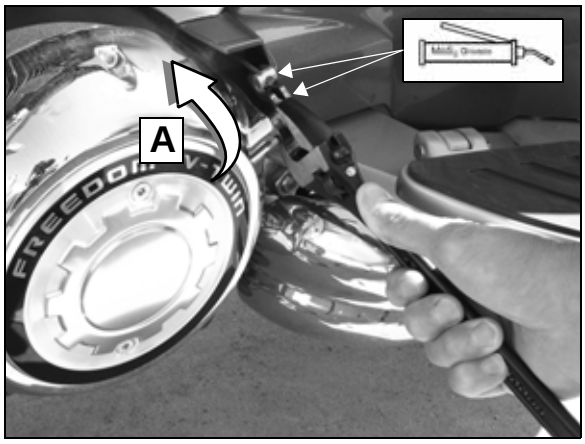

3. Clean pull rod bushing and inspect for wear.
4. Lubricate bushing, pull rod, and lever arm with Moly Assembly Paste PN 2871460.
5. Install bushing on pull rod and reassemble to lever arm in the same manner as removal.
6. Check clutch lever operation.

CLUTCH LEVER LUBRICATION (CABLE)

1. Disconnect clutch cable from lever arm at primary cover as described for Clutch Pull Rod Bushing Lubrication.
2. Clean lower cable bushing and cable. Inspect inner cable wire for damage or frayed strands. Replace cable if damaged.
3. At handlebar end, pull outer cable casing (B) out of perch then pull clutch lever to handlebar. Carefully rotate inner cable to align with lever slot. Do not kink cable. Slide barrel end of cable down and out of lever.

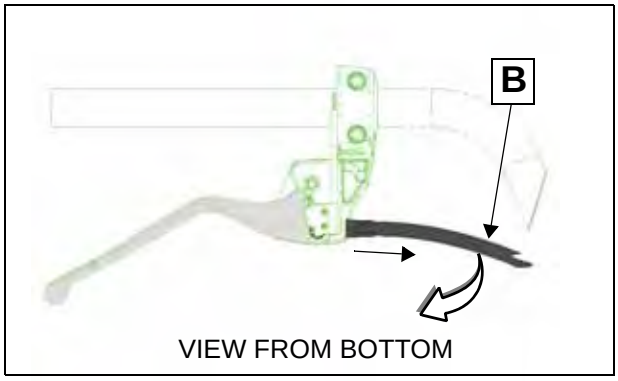

4. Remove nut (C). Push pivot bolt upward to remove it, then remove lever pivot bushing (D).

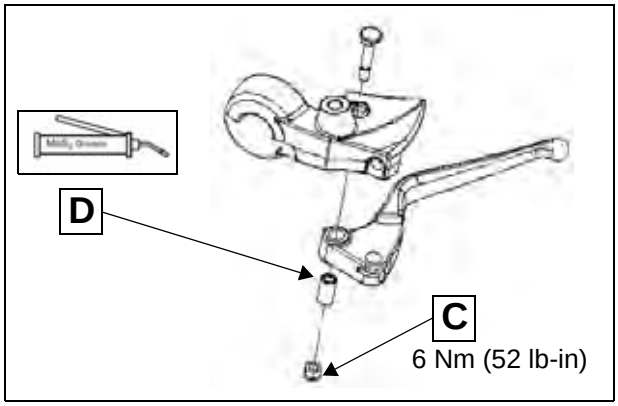

5. Clean all parts. Inspect bushings and lever for wear. Inspect inner cable wire for broken strands.
6. Lubricate lever, bushing, and barrel end of cable with Moly Assembly Paste (2871460).
7. Install barrel of cable in lever then install cable in perch.
8. Assemble lever, bushing, pivot bolt and nut.
9. Lubricate and attach lower end of cable to lifter arm on primary cover, and adjust lever free play.

© 2009 Polaris Sales Inc.

CLUTCH LEVER FREE PLAY (CABLE)

1. With handlebars pointing straight ahead, measure the clutch lever free play (A).

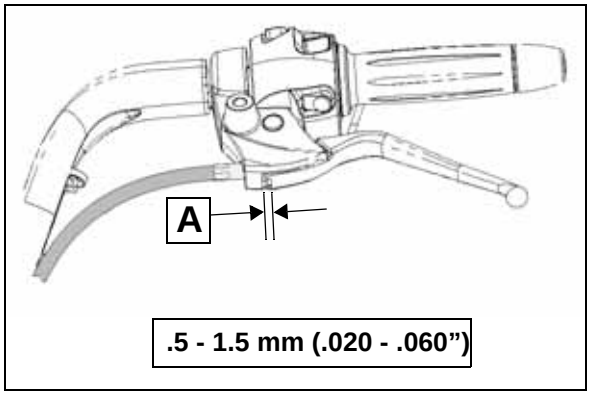

2. If adjustment is required, remove right side cover (page 3.27).

3. Hold cable nut (B) and loosen adjuster jam nut (C).

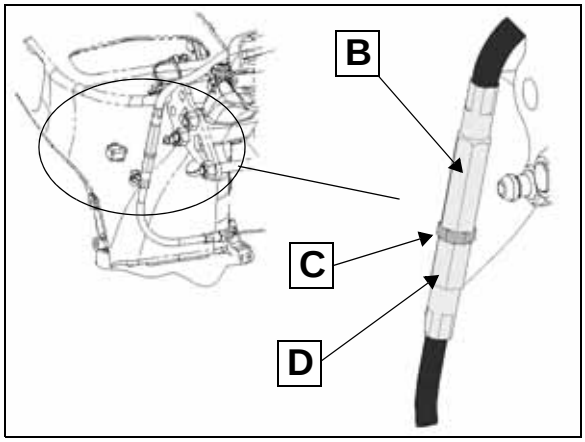

4. Turn cable adjuster (D) in or out until clutch freeplay is correct.

5. Tighten adjuster jam nut securely to cable nut.

CLUTCH FLUID

1. Set the vehicle upright on a level surface and turn handlebars until top of reservoir is level.

2. View fluid level through sight glass.

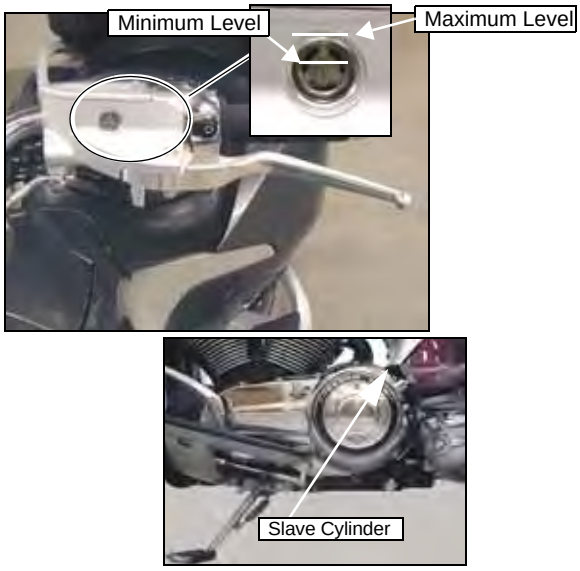

3. If level is low, check for signs of clutch fluid leaks around hoses, fittings, reservoir, and slave cylinder.

4. To add fluid, remove the three reservoir cover screws, cover, and diaphragm.

5. Add DOT 4 Brake Fluid from a sealed container to proper level. Reinstall cover. Torque screws to 25 lb-in. (3 Nm). Wipe cap area clean to remove brake fluid.

6. Check all hoses for signs of deterioration or damage.

© 2009 Polaris Sales Inc.

FRONT BRAKE FLUID LEVEL

1. Set vehicle upright on a level surface and turn handlebars until top of reservoir is level.

2. View the fluid level through the sight glass.
3. If level is low, check brake pads for wear (page 2.15). If pads are not worn past the service limit, inspect the brake system for leaks. Check for signs of brake fluid leaks around hoses, fittings, reservoir, and brake caliper pistons (behind brake pads).
4. To add fluid, remove the three reservoir cover screws, cover, and diaphragm.
5. Add DOT 4 Brake Fluid from a sealed container to the proper level.
6. Clean and dry the sealing surfaces of the reservoir, reservoir cover, diaphragm, and diaphragm plate with a clean lint-free cloth.
7. If the diaphragm is extended, return it to the retracted (neutral) position (A).

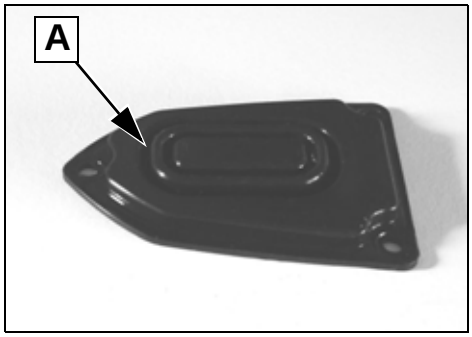

8. Reinstall diaphragm, plate, and cover.
9. Torque screws to 25 lb-in. (3 Nm).
10. Check for deterioration of hoses.

REAR BRAKE FLUID

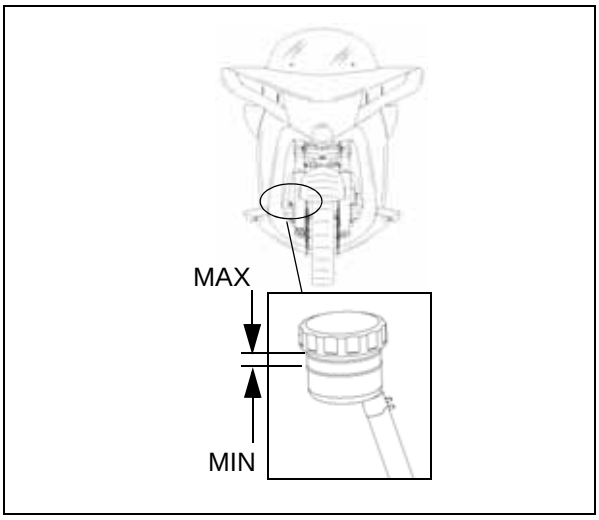

1. Set vehicle upright and view the rear brake fluid reservoir through the right leg fairing with the top of the reservoir level.
2. The fluid level must be between the MIN and MAX level lines on the reservoir.
3. If level is low, check brake pads for wear (page 2.15). If pads are not worn past the service limit, inspect the rear brake system for leaks. Check for signs of brake fluid leaks around hoses, fittings, reservoir, and brake caliper pistons (behind brake pads).
4. To add fluid, remove reservoir cover with diaphragm by turning it counter-clockwise (as viewed from top).
5. Add DOT 4 Brake Fluid from a sealed container to bring the level between the MIN and MAX marks.
6. Clean and dry the sealing surfaces of the reservoir, reservoir cover, diaphragm, and diaphragm plate with a clean lint-free cloth.
7. If the diaphragm is extended, return it to the retracted (neutral) position (B).

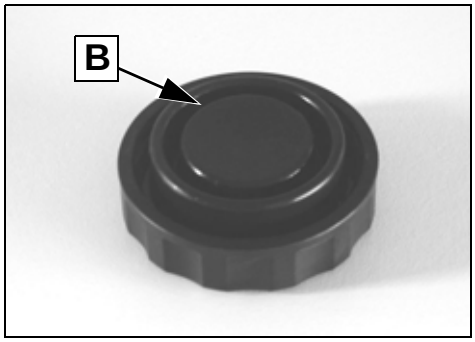

8. Check for deterioration of hoses.

© 2009 Polaris Sales Inc.

FRONT BRAKE PAD INSPECTION

Wear indicator grooves are provided on each front brake pad to allow for a visual inspection without pad removal.

Inspect pads by viewing from rear of caliper.

Replace pads if worn to bottom of grooves or near the minimum thickness.

Refer to Chapter 15 to remove pads for further inspection or to replace if worn.

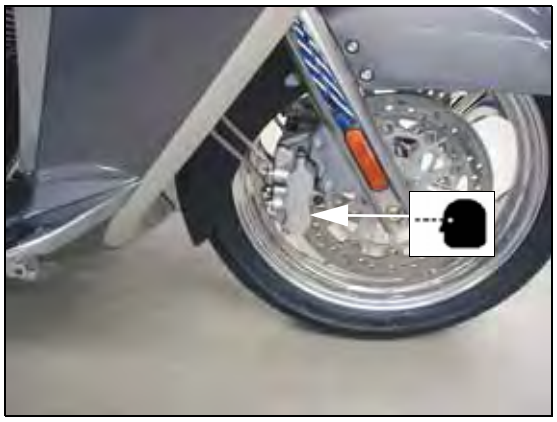

Minimum Thickness:
Front Pad: 1.0mm (.040 in.)

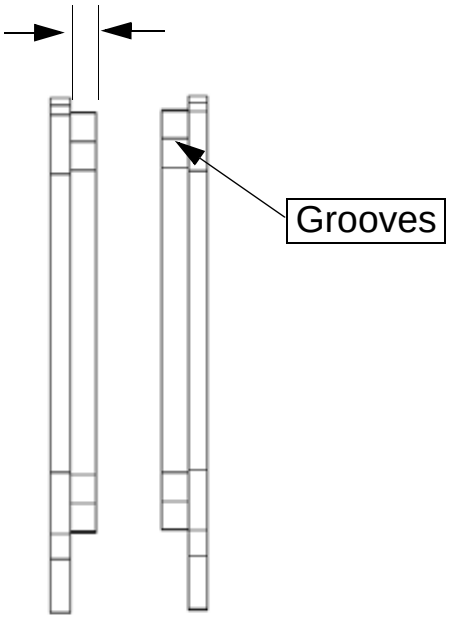

REAR BRAKE PAD INSPECTION

Wear indicator grooves are provided on each rear brake pad to allow for a visual inspection without pad removal.

Inspect pads from top of caliper behind swingarm.

Replace pads if worn to bottom of grooves or near the minimum thickness.

Refer to Chapter 15 to remove pads for further inspection or to replace if worn.

Minimum Thickness:
Rear Pad: 1.0mm (.040 in.)

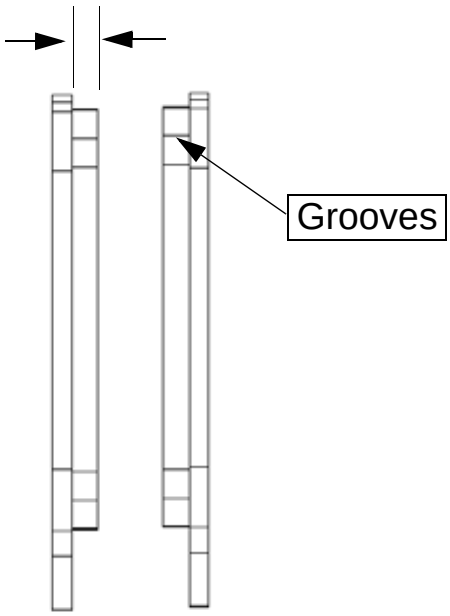

© 2009 Polaris Sales Inc.

SHIFT PEDAL

1. Check all shift pedal and linkage fasteners to be sure they are tight. Torque values are shown on page 9.6.

2. Lubricate the shift pedal pivot bushing with Victory All Purpose Grease P/N 2872187 (page 9.6).

REAR BRAKE PEDAL

1. Check the amount of rear brake pedal movement before it develops firm resistance. It should not move more than 3/8 inch (8mm) before pedal is firm.

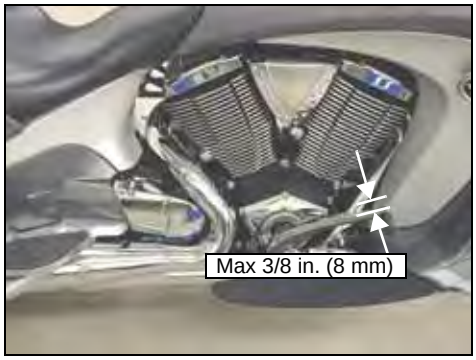

2. Lubricate the rear brake pedal pivot bushing with Victory All Purpose Grease P/N 2872187 (see page 9.6).

3. Check brake pads for wear as outlined on page 2.15.

CRANKCASE VENTILATION SYSTEM

1. Remove left side cover (Chapter 3).
2. Inspect condition of breather hose (A) and hose clamps.

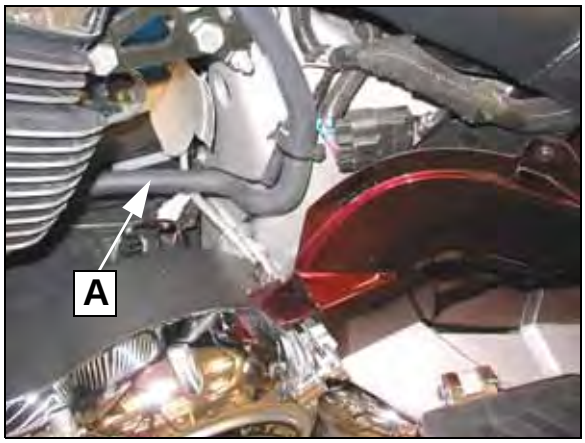

EVAPORATIVE EMISSION CONTROL SYSTEM (California Models)

NOTE: The fuel tank vent is routed to evaporative canister (B). Inspect all hoses for abrasion or wear. Check that all connections are securely attached. Refer to Chapter 5 for hose connection diagram and inspection procedure.

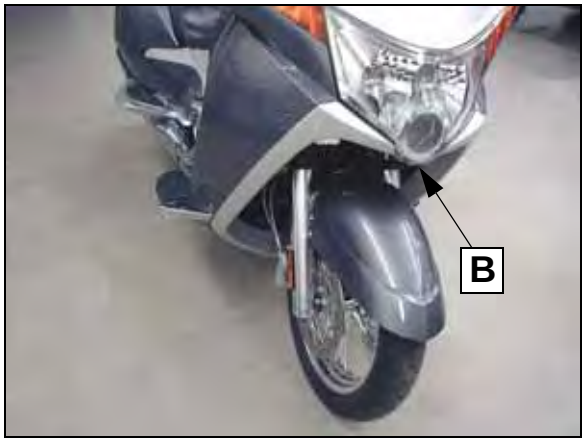

FUEL TANK VENT INSPECTION (49 State)

1. Refer to Chapter 5 for fuel tank vent inspection.

© 2009 Polaris Sales Inc.

FUEL FILTER

The fuel filter is attached to the electric fuel pump located inside the right fuel tank (see Chapter 5). No periodic fuel filter maintenance is required, however, the fuel filter should be replaced at the interval specified in the Periodic Maintenance Table on page 2.5.

FUEL SYSTEM INSPECTION

Inspect fuel system hoses regularly in accordance with the Periodic Maintenance Table on page 2.5.

Inspect hoses, clamps, connectors, and fittings for signs of deterioration, damage, abrasion, cracks, leakage, or kinked areas.

1. Replace components that fail inspection (described above) with genuine Victory replacement parts only.
2. Pull straight forward at the bottom of the lower fuel tank communication hose cover (C) to release clips from lower hose. Slide cover to left to release dart (D).

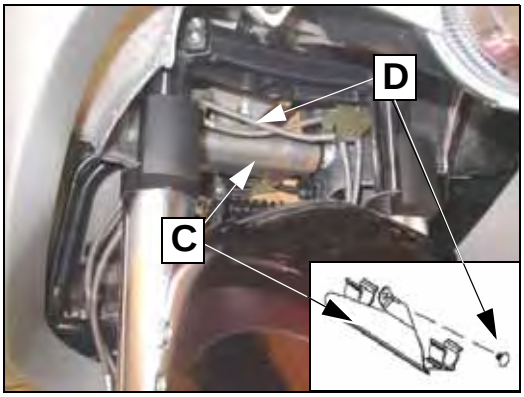

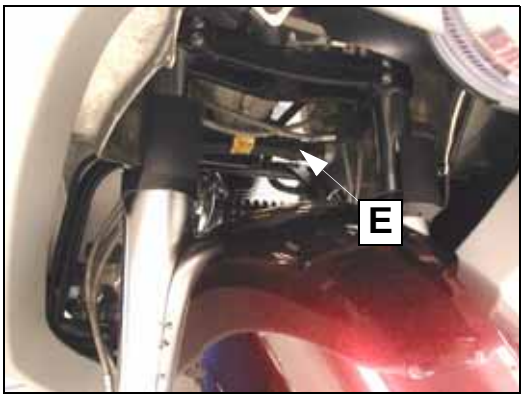

3. Inspect communication hose (E) for deterioration or damage.
4. To install the cover, press lower edge until clips are secured to hose.
5. Align hole at top of cover with hole in frame and secure it in place with the dart.
6. Remove IAC cover.
7. Inspect fuel supply hose (A), fuel rail (B), connectors, and fittings for signs of deterioration, damage, abrasion, cracks, leakage, or kinks.

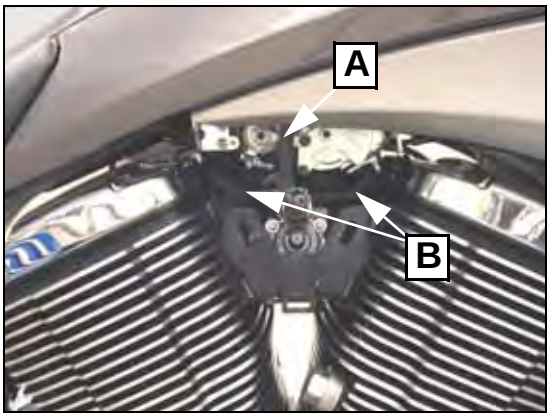

WARNING

The fuel supply hose and fuel rail are subjected to high pressure. Replace with genuine Victory replacement parts to reduce the possibility of fuel line failure. Be sure fuel lines are routed properly and do not come in contact with sharp or hot objects, or anything that may cause wear or damage.

© 2009 Polaris Sales Inc.

SPARK PLUG REMOVAL & INSPECTION

WARNING

HOT COMPONENTS Wear insulated gloves and/or allow engine and exhaust to cool before handling these parts.

1. With the engine at room temperature, grasp the spark plug boot (A) at the base to disconnect. DO NOT pull on the wire or spark plug wire may be damaged.

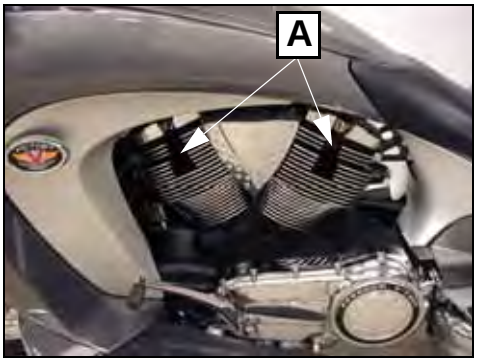

2. Clean the area around spark plug base with compressed air to remove loose debris.
3. Remove spark plugs.
4. Inspect spark plugs for:
   - Insulator damage
   - Worn electrodes
   - Deposits

SPARK PLUG INSTALLATION

Inspect spark plug gap with a wire gauge. If gap adjustment is necessary, bend ground electrode carefully using a spark plug gap tool.

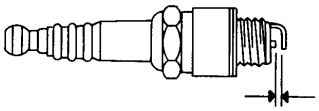

.8 - .9 mm
(.032 - 036”)

TORQUE: 14.5-19.5 Nm (10.8-14.5 lb-ft)

5. Apply anti-seize compound sparingly to spark plug threads, avoiding the bottom 2 or 3 threads.
6. Torque spark plugs to specification.
7. Apply a light film of dielectric grease to each spark plug boot and install securely on spark plugs.

© 2009 Polaris Sales Inc.

BATTERY

This motorcycle is equipped with a maintenance free battery which is located in front of the engine. DO NOT remove cell caps or add distilled water to the battery.

Refer to Chapter 16 for battery and charging system diagnostic procedures.

WARNING

Battery electrolyte is poisonous. It contains sulfuric acid. Serious burns can result from contact with skin, eyes or clothing. Antidote:

External: Flush with water.

Internal: Drink large quantities of water or milk. Follow with milk of magnesia, beaten egg, or vegetable oil. Call physician immediately.

Eyes: Flush with water for 15 minutes and get prompt medical attention.

Batteries produce explosive gases. Keep sparks, flame, cigarettes, etc. away. Ventilate when charging or using in an enclosed space. Always shield eyes when working near batteries. **KEEP CHILDREN AWAY FROM BATTERY.**

NOTICE

Whenever removing the battery, disconnect the negative (black) cable first. When reinstalling the battery, connect the negative (black) cable last.

Do not remove the battery cables while the engine is running. Doing so may damage the Electronic Control Unit (ECM).

Take great care not to reverse the battery leads when installing the battery. Reverse power applied to the ECM will damage it instantly.

BATTERY CHARGING

Refer to “BATTERY CHARGING - GENERAL” on page 16.5.

BATTERY STORAGE

When the motorcycle is not used for periods of one month or longer, charge the battery using the charging plug harness or remove battery from motorcycle and charge it. Store battery in a cool, dry place. (See Chapter 16).

WARNING

Battery charging can create explosive gasses; keep sparks, flames, cigarettes or anything that could ignite the gasses away. Provide adequate ventilation when charging in an enclosed space. Batteries contain acid that is caustic. Wear protective clothing and a face shield or protective eyewear when working with the battery. KEEP OUT OF REACH OF CHILDREN.

BATTERY INSPECTION

Battery terminals and connections should be kept free of corrosion. If cleaning is necessary, remove the corrosion with a stiff wire brush. Wash with a solution of one tablespoon baking soda to one cup water. Rinse well with tap water and dry off with clean rags. Coat terminals with dielectric grease.

1. Visually inspect the exterior of the battery. Replace battery if case damage is evident or if the case is swollen, deformed or leaking electrolyte.

2. To remove corrosion, remove battery from motorcycle and wash terminals with water and baking soda solution. Clean terminals, bolts, and cable ends with a brass wire brush. Apply a thin film of dielectric grease to the terminal bolt threads.

3. Measure battery voltage.

Specification: 12.5Vdc minimum

4. If battery voltage is below 12.5 VDC, charge it thoroughly (refer to page 16.5). Replace battery if it will not accept a charge.

© 2009 Polaris Sales Inc.

BATTERY REMOVAL

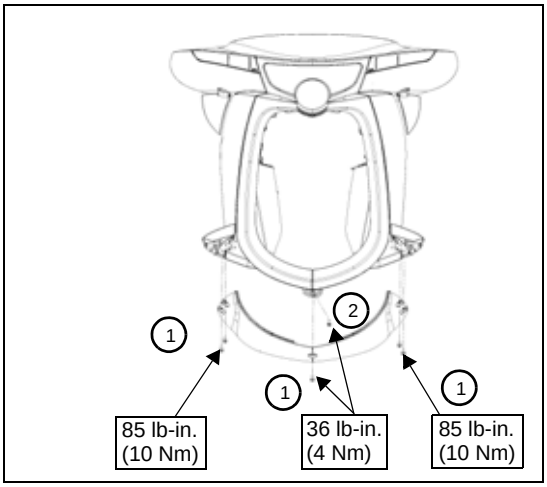

NOTICE

Do not disconnect the positive cable before the negative cable. Disconnecting the positive cable first increase the risk of sparks and an electric shock that could result in damage or injury.

1. Turn handlebars fully right.
2. Remove five belly pan screws (1) with a 6mm Allen wrench.
3. Remove screw (2) that joins the two side grills.

NOTE: Grill bolt is placed in FRONT hole; center belly pan screw in rear hole.

4. Remove the negative (-) battery cable from battery terminal (3) with a 10mm wrench.

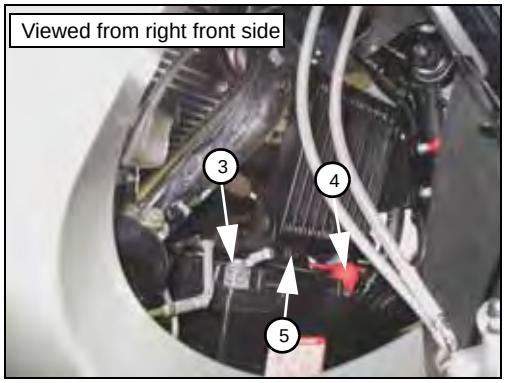

5. Lift the red protective boot (4) off of the positive (+) cable end to expose positive terminal. Remove the positive cable from the battery terminal (10 mm wrench).
6. Remove front battery box bolt (5) with a 10mm socket.
7. Tip front box forward and lift battery up to clear case and then out right side.

BATTERY INSTALLATION

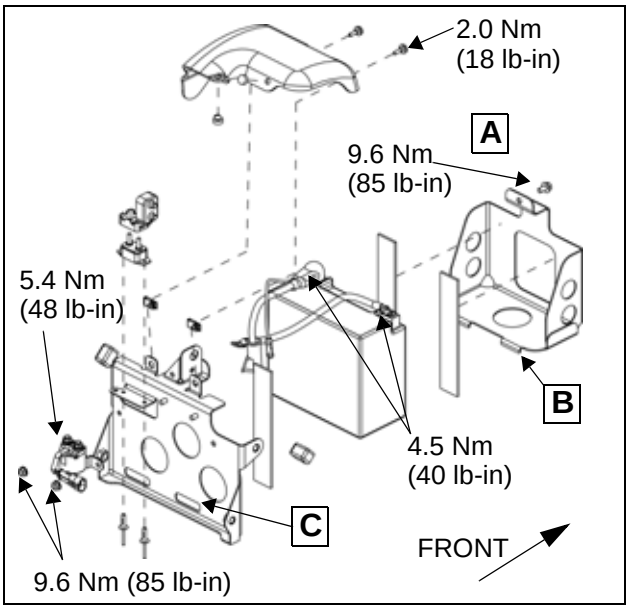

NOTICE

Do not connect the negative cable before the positive is connected. Connecting the negative cable first increases the risk of sparks and an electric shock that could result in damage or injury.

NOTICE

On CB Radio equipped vehicles, be sure the CB antenna is installed and connected to the radio before connecting the battery.

1. Inspect battery tray and outer bracket for damage. Be sure fasteners are tight, and foam pads are in good condition and properly located.
2. Install battery into box with terminals facing forward. Tip front battery box with battery toward battery box and install bolt (A). Be sure tabs (B) engage slots (C).
3. Apply dielectric grease to terminal bolt threads.
4. Install positive battery cable first. Torque bolt to specification.
5. Install red protective boot over + (positive) terminal.
6. Install negative cable. Torque bolt to specification.
7. Connect grill halves and install scoop (see illustration above left).

© 2009 Polaris Sales Inc.

ENGINE COMPRESSION TEST

1. Warm engine to operating temperature.
2. Shift transmission into neutral and stop engine.
3. Disconnect spark plug caps and remove one spark plug.
4. Connect a spark plug to each cap and connect center electrode of plug to engine ground.

1. Install compression tester in spark plug hole (leave the spark plug in the other cylinder).

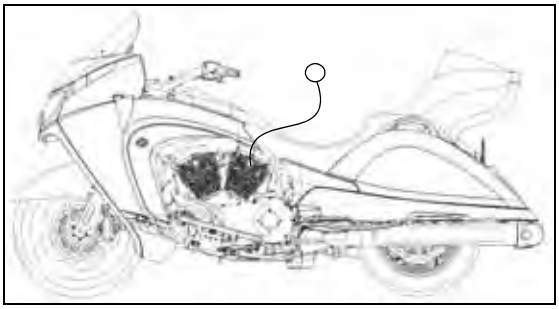

2. Open throttle and crank engine until needle on compression gauge stops rising (about 5 seconds).
3. Repeat procedure for other cylinder. Cylinder compression should be within 10% of each other.

Engine Compression:

STD: 210-225 psi (1448-1551 kPa)

SERVICE LIMIT: Below 180 PSI

High engine compression may indicate:

- Carbon deposits on piston crown / cylinder head
- Engine modification
- Addition of performance parts
- Faulty gauge

Low engine compression may indicate:

- Debris / carbon on valve face or valve seat.
- Worn piston and/or piston rings
- Piston ring stuck in the piston ring groove
- Leaking valves or head gasket
- Slow starter motor cranking speed
- Valve timing incorrect
- Faulty gauge

CYLINDER LEAKAGE TEST

If compression is low, perform a cylinder leakage test to determine where leakage is occurring. Follow instructions provided with test equipment.

Cylinder Leakdown Tester: PV-35667-A

ENGINE COMPRESSION TEST (WET)

If a leakage tester is not available, perform a wet cylinder compression test.

1. Pour 3-5 cc of clean engine oil into one spark plug hole. Repeat cylinder compression test. Repeat for the other cylinder.
2. If compression increases substantially, inspect cylinder, piston, and rings. If compression does not increase, inspect valves and valve seats.

SPROCKET INSPECTION

1. Inspect front and rear sprocket teeth (Chapter 11) for wear or damage from foreign material. Closely inspect drive belt condition at the same time.

DRIVE BELT CLEANING

Drive belt and sprocket service life is maximized and drive line noise minimized by proper cleaning. Cleaning interval is approximately every tire change, or more often if operated in dirty, dusty, or high debris environments.

1. Mix a few drops of mild dish soap with a cup of warm water a use a soft nylon brush to clean the belt and sprocket teeth.
2. Pay close attention to corner areas (A) where road debris and belt dust can collect.

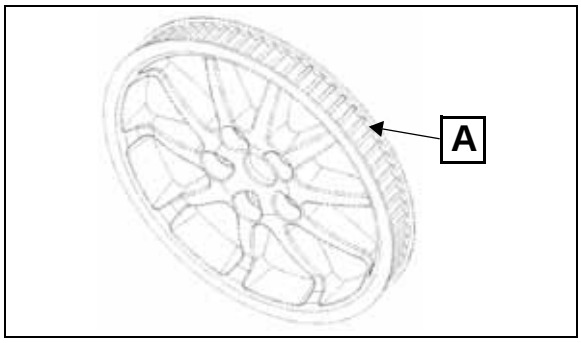

3. Rinse thoroughly with clear water. Dry thoroughly.

NOTE: Do not inspect or adjust drive belt tension when the belt is wet. Improper adjustment will result.

© 2009 Polaris Sales Inc.

DRIVE BELT WEAR ANALYSIS

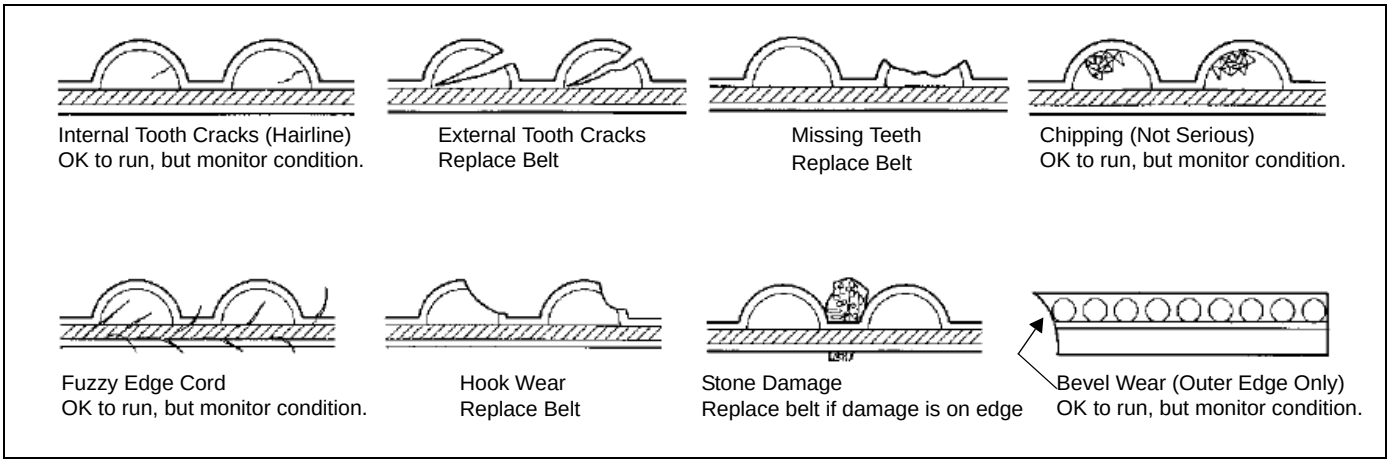

DRIVE BELT CONDITION

Replace the drive belt if it is cracked or has broken teeth or frayed edges. No matter its condition, the drive belt should be replaced in accordance with the Periodic Maintenance Interval Table on page 2.5.

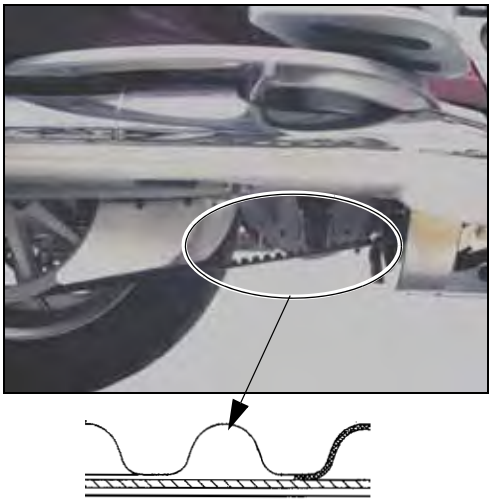

DO NOT attempt to check belt tension if the belt has been exposed to rain or washing within a 24 hour period or if the belt is hot from riding. Allow the belt to cool down to ambient temperature before measuring belt tension. Replace drive belt and both sprockets as a set if drive belt has over 5,000 miles (8,000 km) of service at the time of damage or failure.

DRIVE BELT TENSION GAUGE

Proper use of the belt tension gauge PV-43532 is important for accuracy. During the measurement procedure, be sure the gauge is seated squarely against the belt and in alignment with the belt centerline.

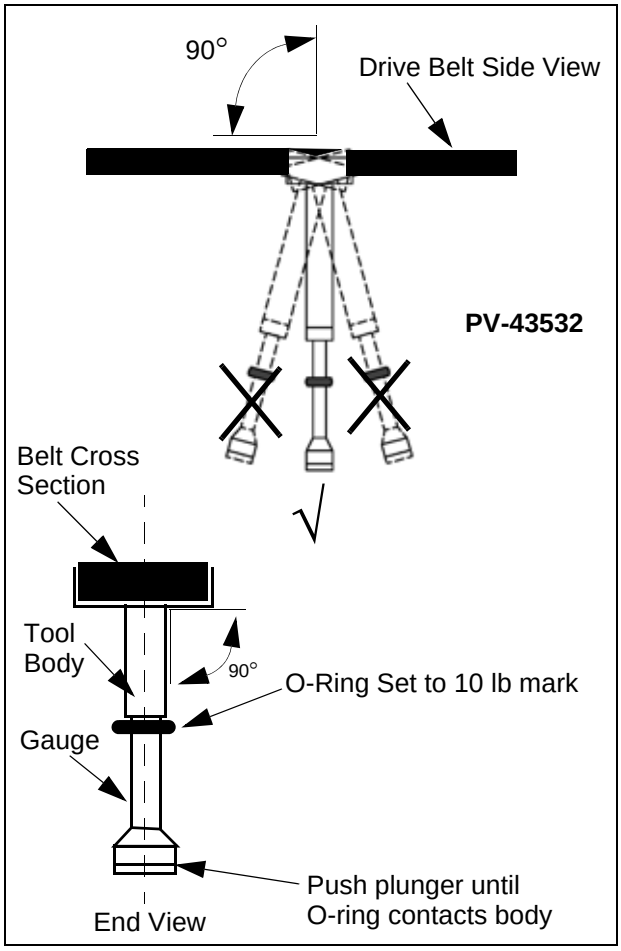

© 2009 Polaris Sales Inc.

DRIVE BELT TENSION - INSPECTION

WARNING

Care should be taken to be sure the motorcycle will not tip or fall while elevated. Severe personal injury or death may occur if the motorcycle tips or falls.

1. Secure motorcycle in an upright position.
2. Shift transmission into NEUTRAL.
3. ELEVATE rear wheel off the ground when checking deflection or adjusting the belt.
4. Do not attempt to check belt tension if the belt has been exposed to rain or washing within a 24 hour period or if the drive system is hot from riding. Allow the system to cool to room temperature (60-80 F / 15-27 C) before measuring belt tension. Replace drive belt and both sprockets as a set if the drive system has over 5,000 miles (8,000 km) of service at the time of damage or failure.
5. See page 2.22 for instructions for proper use of belt tension gauge PV-43532.

Finding The Tight Spot In The Drive System

6. Use the tire valve stem as a reference. Rotate wheel in a CLOCKWISE rotation as viewed from belt side of motorcycle until valve stem is at the bottom. (Fig. 1)

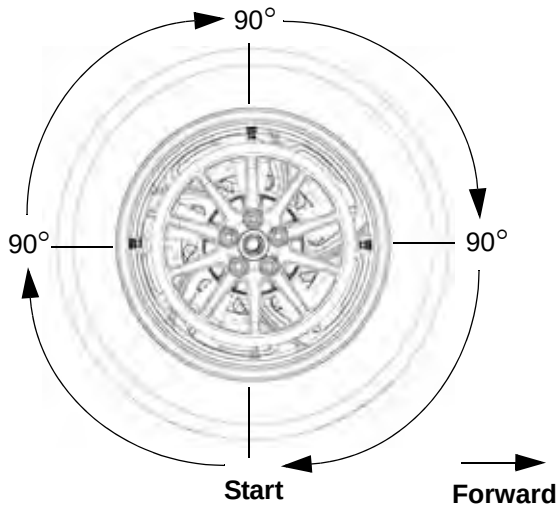

Rotate clockwise only during this procedure

Fig. 1

7. Slide O-ring on belt tension gauge to the 10 lb. mark.
8. Place tape measure or ruler next to drive belt at mid-span (Fig. 2) and align a major graduation mark on the ruler with the lower edge of the belt surface. (Fig. 3) Do not move the ruler from this position.

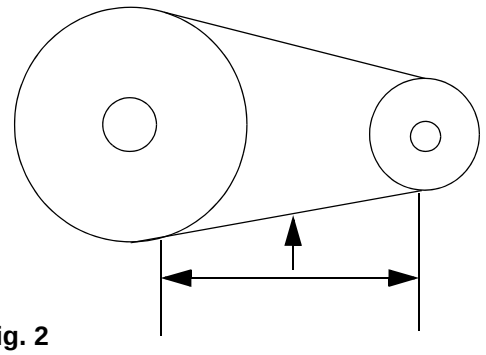

Fig. 2

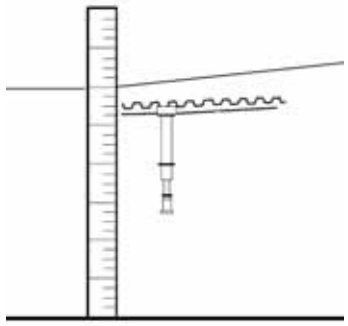

Fig. 3

9. Place belt tension gauge squarely against belt at until push up on center plunger until O-ring just touches tool body. Record the total amount of deflection as measured on the ruler.
10. Rotate wheel 90 degrees (valve stem is at rearmost position). Measure and record the deflection.
11. Repeat measurements with the valve stem at the top and forward positions and record the deflection.
12. Compare all measurements and use the point of least deflection (tightest spot) as your reference point to determine if belt requires adjustment.
13. Rotate the wheel in normal drive direction (CLOCKWISE) 1-2 revolutions back to your reference (tightest) point.
14. If belt deflection is greater than specified, tighten the belt. If deflection is less than specified, loosen the belt. Refer to specification table on page 2.24.

© 2009 Polaris Sales Inc.

SPECIFICATIONS: DRIVE BELT

BELT DEFLECTION	
Model	**Deflection @ 10 lbs. force**
All 2008-2010 (Except 2010 8-Ball & 2010 Ness Signature Series)	**32.0 mm ± .5mm** (1 1/4″ ± 1/32")
2010 8-Ball & 2010 Ness Signature Series	**15.0 mm ± .5mm** (19/32″ ± 1/32")

SONIC TENSION DATA	
The following data is provided for use with the Gates 507C Sonic Tension Meter or an equivalent. Follow Steps 1-4 and the instructions included with your sonic tension meter.	
Required Data For Sonic Tension Meter	**Specification**
Span	708.65mm
Belt Width	28mm
Belt Mass Constant	8.4
Tension (All 2008-2010 Models Except Vision 8-Ball)	**20 Hz (± 1 Hz)**
Tension 2010 Vision 8-Ball	**26 Hz (± 1 Hz)**

DRIVE BELT ADJUSTMENT / ALIGNMENT

Rear Wheel Alignment / Belt Adjustment

WARNING

A mis-aligned rear axle can cause drive line noise and damage the drive belt, causing possible belt failure and loss of control of the motorcycle.

1. Marks (A) and (B) are used as a reference for initial wheel alignment. Marks should be in same position on both left and right sides of wheel.

2. Loosen axle nut (C).

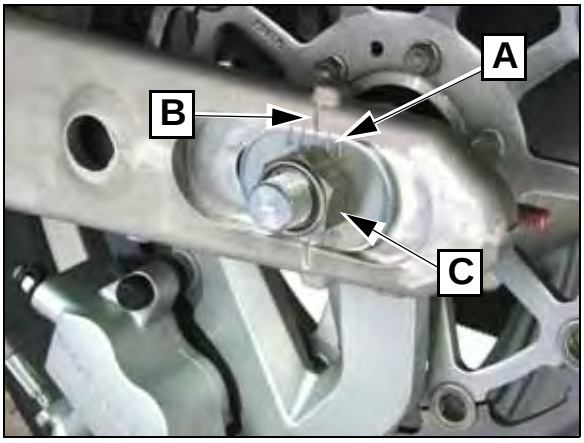

Marks are for initial alignment only. Refer to procedure for final alignment.

3. Safely elevate motorcycle with tire off floor.

© 2009 Polaris Sales Inc.

4. Turn adjuster nuts (D) to achieve:
   - Recommended belt tension
   - Wheel alignment (marks equal both sides)

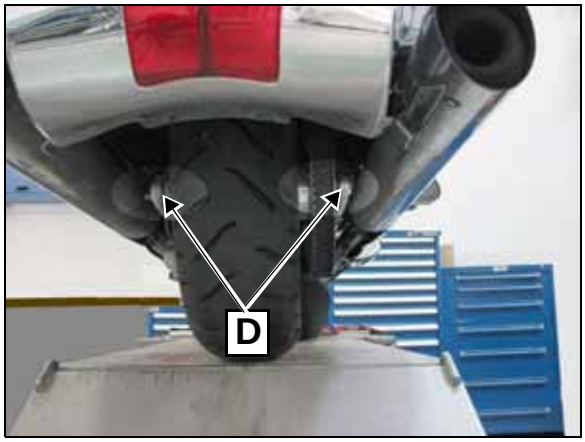

5. When *belt tension* is correct, check and adjust final *wheel alignment* as follows:

NOTE: To minimize change in belt tension, use LEFT SIDE adjuster only (E) to make final adjustments to belt alignment. *Be sure to keep axle seated forward against axle adjusters during this procedure.*

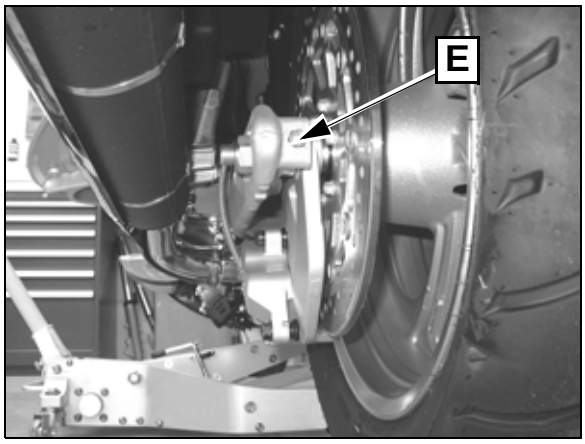

6. Rotate the wheel BACKWARD. Tighten LEFT rear axle adjuster until belt *begins* to track to right sprocket flange (outboard) during backward wheel rotation.

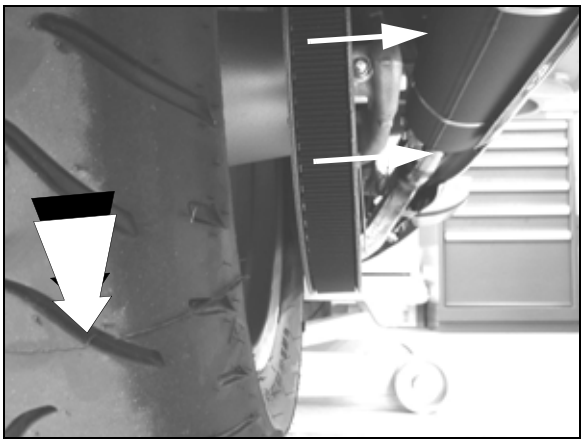

Rear Wheel Alignment - Final

7. Rotate the wheel in FORWARD direction. Loosen LEFT rear axle adjuster until belt moves off the right flange and begins to track to left sprocket flange (inboard) during forward wheel rotation.

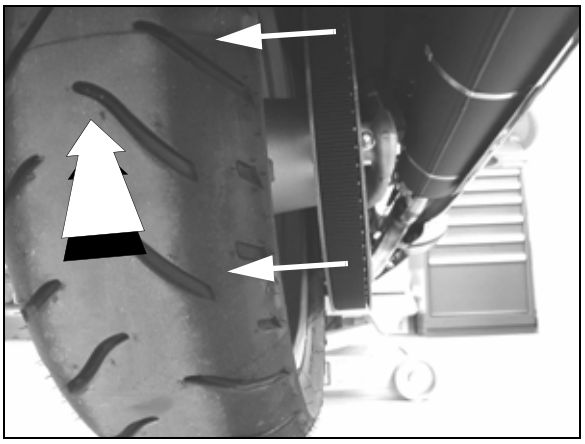

8. Tighten rear axle nut to 88 Nm (65 lb-ft).
9. Torque both axle adjuster nuts to 11 N-m (8 lb-ft).
10. Pump rear brake pedal several times to reset brake pad distance.
11. Verify wheel rotates smoothly and freely without drag when brake pedal is released.

© 2009 Polaris Sales Inc.

HEADLAMP AIM INSPECTION

The headlamp high beam should shine straight ahead. The low beam will spread more to the right (U.S. / Canada). The top of the HIGH beam should be slightly below the height of the center of the headlamp bulbs, at a distance of 25 ft. (7.6 meters).

To check for proper headlamp aim:

- Set tire pressure (page 2.8) and rear suspension air pressure for load (page 2.30).
- Straddle motorcycle in an upright position and sit in the operator's seat.
- Turn ignition switch ON.
- Select HIGH BEAM.

NOTE: On 2009-2010 models, tap the starter button to turn the headlamp on or start the engine (it will remain on until key is switched OFF).

- Compare to illustration and adjust if necessary.

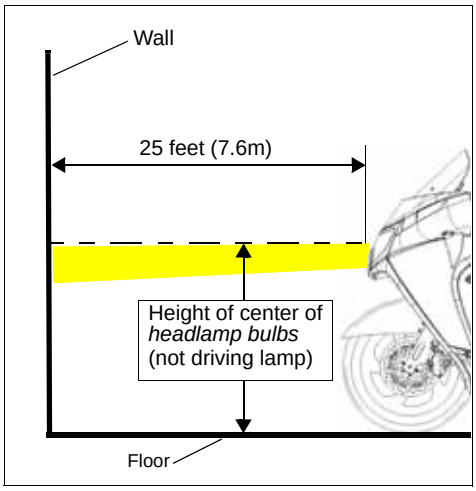

HEADLAMP AIM ADJUSTMENT

The headlamp adjustment knob can be accessed through the opening in the headlamp housing mount under the windshield access panel.

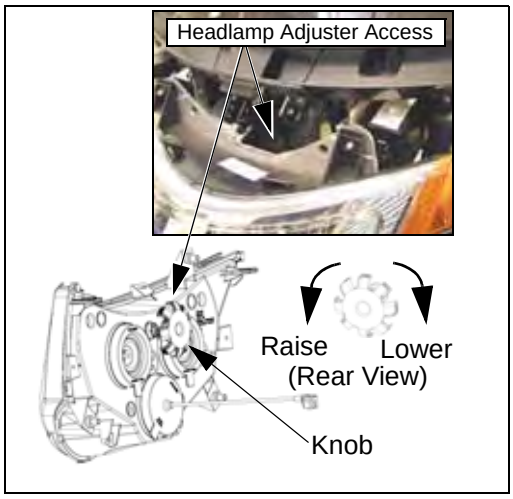

- Remove windshield access panel (page 3.6).
- Reach through opening in headlamp housing mount.
- To LOWER headlamp beam, turn knob CLOCKWISE (as viewed from operator's seat).
- To RAISE headlamp beam, turn knob COUNTER-CLOCKWISE (as viewed from operator's seat).

© 2009 Polaris Sales Inc.

SIDESTAND INSPECTION

1. Support the motorcycle in an upright position.
2. Inspect sidestand spring for damage or loss of tension. Be sure stand returns to fully retracted position.
3. Inspect sidestand for smooth movement.

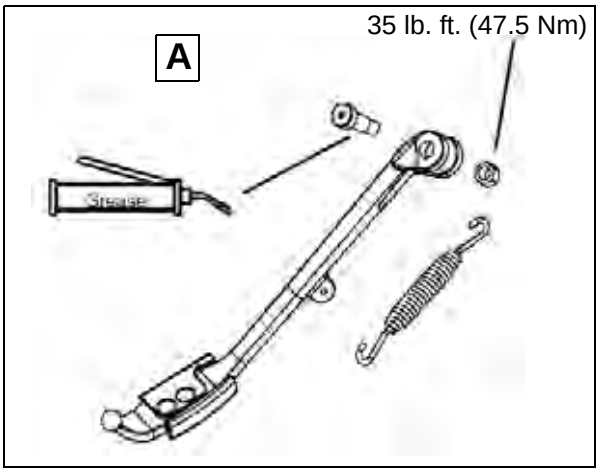

4. Inspect sidestand pivot bolt nut for proper torque.
5. Replace sidestand if it is bent. Do not attempt to straighten sidestand.
6. Inspect sidestand pad for wear.

SIDESTAND PAD INSPECTION

Sidestand Pad Inspection

1. Inspect the sidestand rubber pad (A) for wear. Be sure pad is secured in place and not damaged or torn. Replace pad if worn to or beyond the wear mark (B). See page 2.28 for replacement procedure.

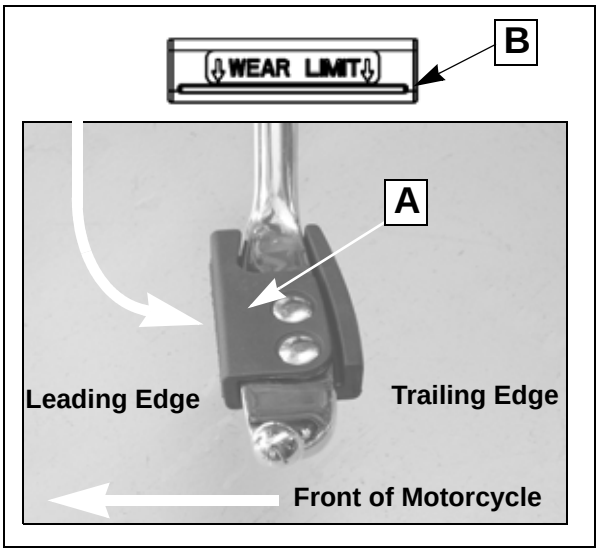

SIDESTAND & SPRING REMOVAL

WARNING

The sidestand spring is under tension. Wear eye and face protection when removing and installing the spring and sidestand. Be sure the vehicle is properly secured before you begin.

1. Sidestand will be moved between the UP (retracted) and DOWN (extended) position during removal and installation. Be sure vehicle is properly secured.

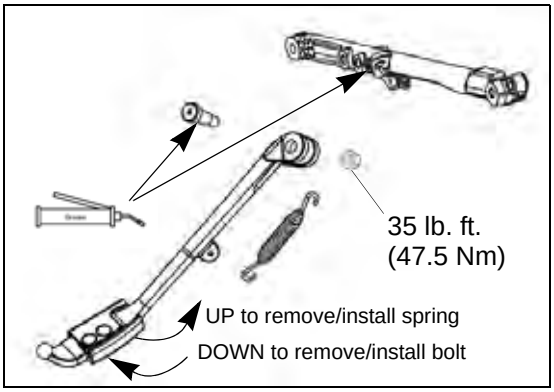

2. Remove sidestand pivot nut using a 15mm socket while holding bolt with a 6mm hex wrench.
3. Place sidestand in the DOWN position, then remove the bolt.
4. Grasp sidestand firmly and move it to the UP position.
5. Pull sidestand straight rearward against spring tension until mounting flange on sidestand is clear of the recessed mounting boss on the frame cradle.
6. Remove spring.
7. *Installation:* Attach spring to sidestand.
8. Lightly grease sidestand mounting boss on frame rail and the shouldered portion of the pivot bolt.
9. Place loose end of spring through hole in frame rail.
10. With sidestand in the retracted position (up), pull stand straight rearward against spring tension until the mounting flange on the sidestand drops into the recessed mounting boss on the frame cradle.
11. Swing sidestand to the extended position to align bolt hole and install bolt and nut.
12. Torque nut to 35 ft.lbs. (47.5 Nm) and wipe off any excess grease.Cycle the sidestand to be sure it moves freely, and returns to the fully retracted position.
13. Cycle the sidestand to be sure it moves freely, and returns to the fully retracted position.

© 2009 Polaris Sales Inc.

SIDESTAND PAD REPLACEMENT

Sidestand Pad Removal

1. Remove side stand from frame.

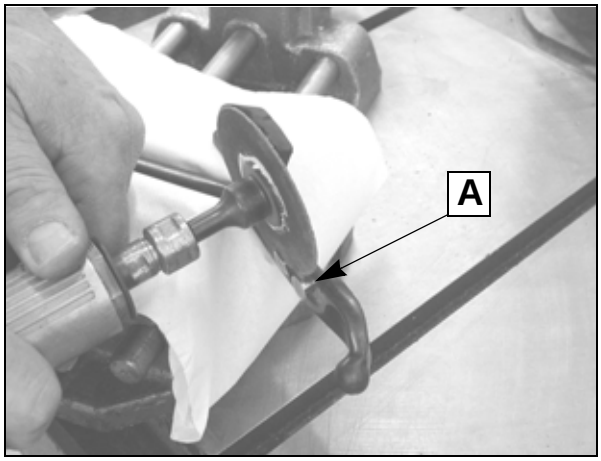

2. Place sidestand in a soft-jawed vise.
3. Remove rubber pad with a pliers to expose the rivets.
4. Using an angle grinder, cut off the head of both rivets on the top side of the sidestand foot (A). Be careful to avoid grinding wheel contact with the finished area of the stand.
5. Drive rivets out of sidestand foot from top to bottom with a suitable drift punch (B).

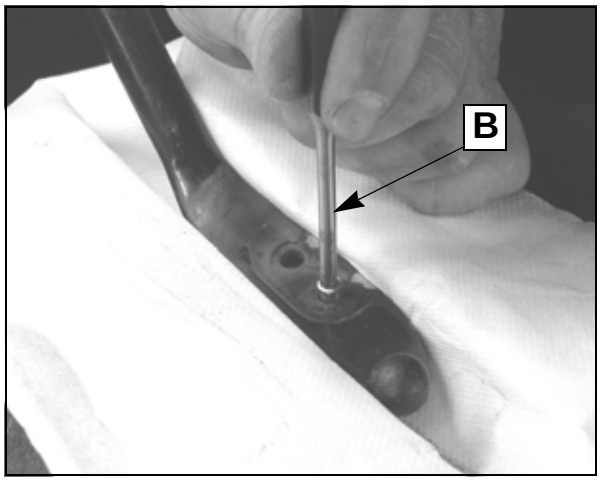

Sidestand Pad Installation

1. Install new sidestand pad with open end on trailing edge of stand.

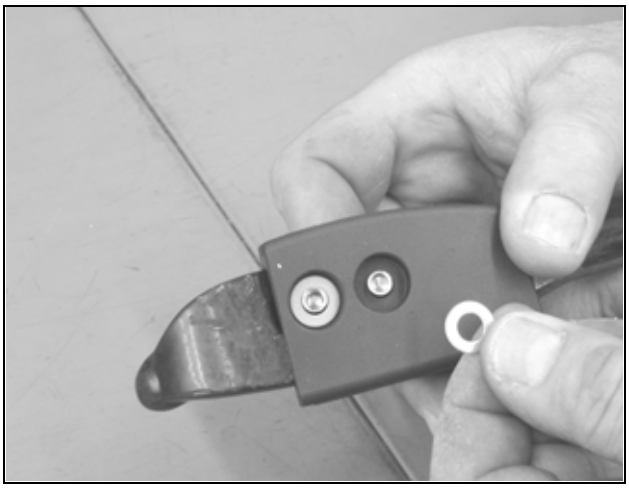

2. Install new rivets from top to bottom.
3. Invert sidestand and place washers over rivets.
4. Hold washers and rivets in place and set sidestand on a hard surface (such as the anvil of a vise) with hollow end of rivets facing upward. Push washers as far down as possible. Be sure washers are at least 1/16 - 1/8 inch (1.5-3mm) below hollow end of rivets.
5. Peen hollow end of rivets with a commercially available rivet tool. Be sure rivets, washers and pad are secure.

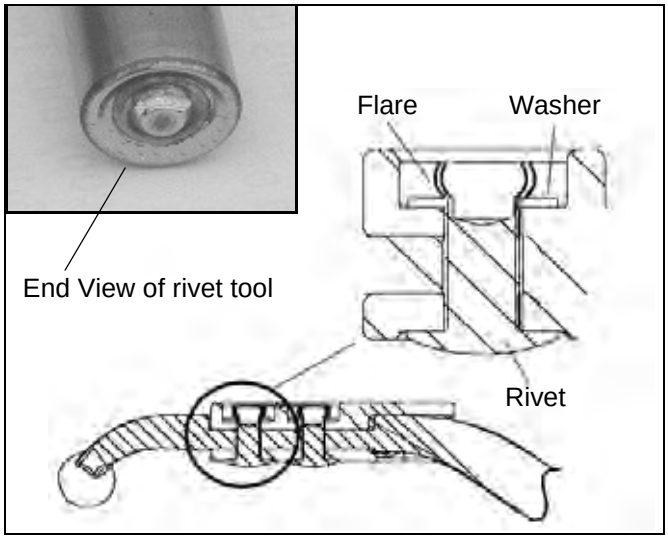

NOTE: An alternative method is to use a center punch to start a flare on hollow end of rivet, then use a 1/4 inch drift (flat) punch to complete the peening operation.

6. Apply touch up paint or primer to exposed bare metal.

© 2009 Polaris Sales Inc.

REAR SUSPENSION / SWINGARM INSPECTION

WARNING

Care should be taken to be sure the motorcycle will not tip or fall while elevated. Severe personal injury or death may occur if the motorcycle tips or falls.

1. Sit astride the motorcycle. Compress the rear suspension several times and check for smooth and quiet operation (A).

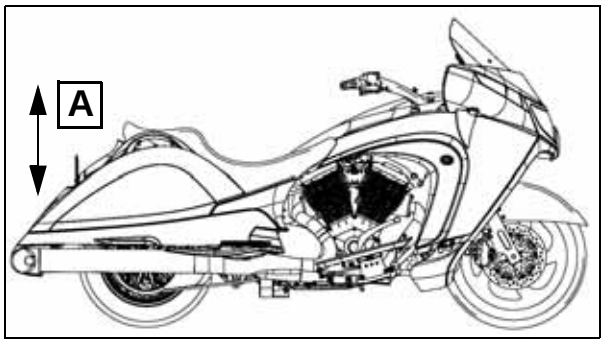

2. Verify rear axle nut and swingarm nuts are tightened to 88 Nm (65 lb-ft).
3. Secure motorcycle with rear wheel elevated.
4. Grasp the rear wheel and push firmly side-to-side (B). If movement is detected, determine if movement is at axle area (C) or swingarm pivot area (front of swingarm shown in Fig. 4 above right). Refer to Chapter 13 for wheel bearing and swingarm bearing replacement.

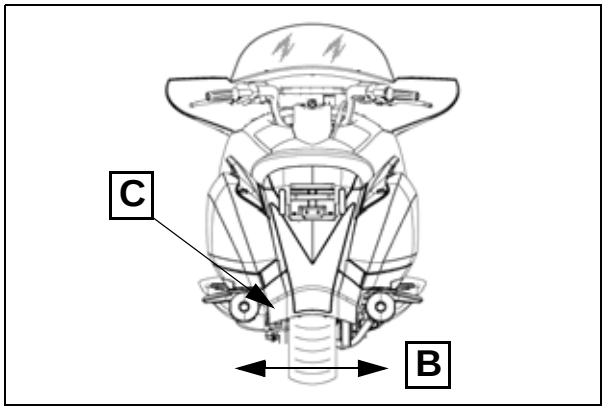

5. Rotate rear wheel and inspect for smooth rotation of rear wheel bearings. If roughness or unusual sounds are detected, inspect rear wheel bearings (Chapter 13), belt tension and alignment (page 2.23 - 2.24), and brake pads (page 2.15).
6. Inspect rear shock for signs of oil leakage and all rear suspension components for damage or loose fasteners.
7. Remove the seat (page 3.5).
8. Inspect fasteners, bushings, and bearings on all suspension components, including shock absorber top mount (D), strut (E), and rocker arm (F).

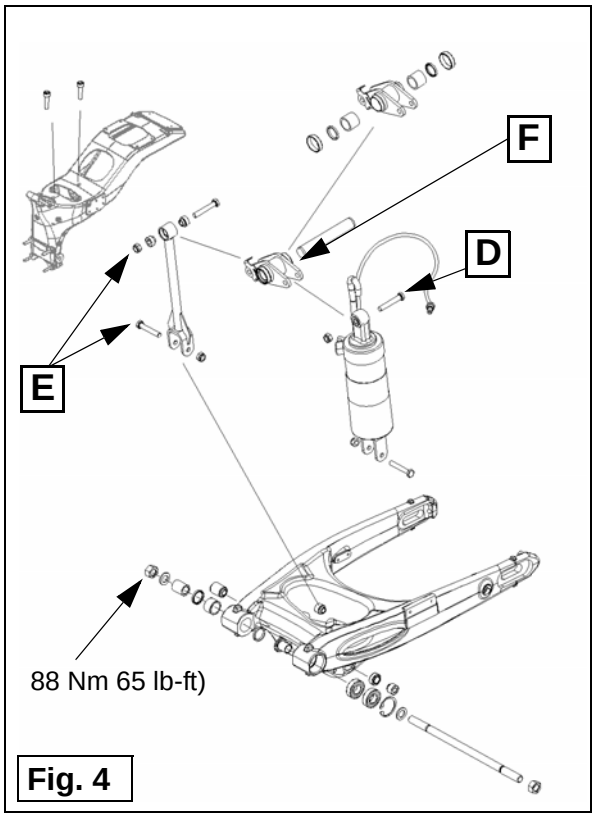

Fig. 4

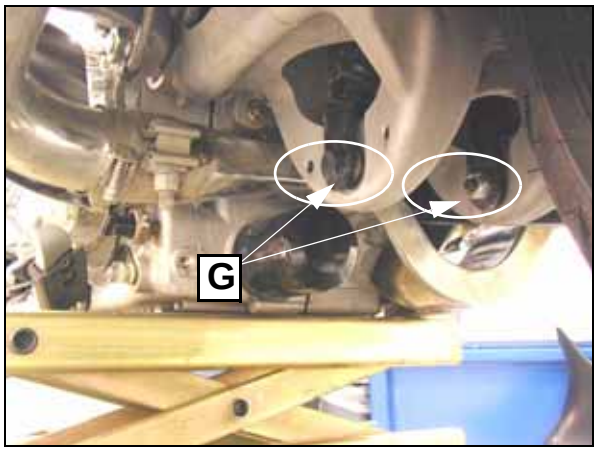

9. Check lower shock and strut fasteners, and bushings for wear (G).
10. If radial movement or excessive play is detected at any of the pivots, or if bushings are cracked, worn, displaced or damaged, remove rear shock absorber assembly and replace parts as required. (Chapter 13).

© 2009 Polaris Sales Inc.

REAR SUSPENSION ADJUSTMENT

2008-2010 All Vision *except 2010 8-Ball and NSS*

2010 Vision 8-Ball
2010 Ness Signature Series Vision

AIR SUSPENSION ADJUSTMENT

Set desired pressure with bike unloaded on side stand

7176130

Total Cargo & Occupant weight (lbs)	Air Pressure (psi)		
	No Trunk	Trunk	Low
100	0	0	22
125	0	6	25
150	0	10	28
175	4	13	31
200	10	19	33
225	14	23	36
250	19	28	39
275	24	33	42
300	30	39	46
325	35	44	50
350	40	49	55
375	46	55	60
400	51	60	66
425	57	66	72
450	62	71	

To provide the most comfortable ride and proper ground clearance, adjust air pressure in the rear shock absorber as specified on the decal (located in left saddlebag area) for total cargo and occupant weight.

Follow these guidelines to check and adjust air pressure:

- Rest motorcycle firmly on sidestand on level ground.
- Remove all cargo from the saddlebags and trunk.
- Victory Air Pump & Gauge 2876654 or PV-48909 is the preferred tool for checking and adjusting rear suspension air pressure. If not available, use a pressurized dry air source with a maximum line pressure of 110 PSI and the pressure gauge provided in the tool kit (or a similar 0-100 PSI tire pressure gauge).
- Use ONLY A DRY AIR SOURCE, such as a system with a water separator or airline dryer to prevent moisture from entering the shock. The shock has a small volume. Air pressure increases VERY quickly when using pressurized air.

NOTE: The shock has a small air volume. Each time pressure is checked with the gauge provided in the tool kit (or similar style tire pressure gauge) approximately 4 PSI (27.5 kPa) is lost to fill the volume of the gauge. Once you've set the pressure with the gauge, remove it quickly to minimize leakage, and expect to see a reduction from the previous reading of about 4 PSI if you re-check the pressure with the tool kit gauge.

1. Open left saddlebag door.
2. Remove cap from air fitting (1) in left bag.
3. Read recommended air pressure from decal for total cargo and occupant weight. Use the appropriate column (with trunk or no trunk).
4. Screw hose fitting securely onto air fitting and read air pressure on gauge.
5. To REDUCE air pressure, push the bleed button (2) located on side of gauge. Bleed pressure in small amounts until desired pressure is indicated on gauge. Remove the tool hose from air fitting and install the cap.

6. To INCREASE pressure, install the gauge select the desired pressure from the chart as described in steps 1-4 above. Pump the handle (3) until pressure increases to the desired amount, then remove the hose and install the cap.

DO NOT exceed 110 PSI (758 kPa) when filling the shock.

DO NOT operate the motorcycle with air pressure above 72 PSI (496 kPa) (pressure measured with motorcycle on the side stand).

© 2009 Polaris Sales Inc.

FRONT SUSPENSION INSPECTION

WARNING

Damaged, worn, or loose suspension components may cause loss of control, increasing the chance of a crash or possible injury. Damaged, worn, or loose suspension components must be repaired before the motorcycle is operated. See Chapter 12.

1. Place motorcycle on sidestand and inspect front forks. Make sure no fork oil present on the outer fork tubes, fork seals, or around the inner tubes (A).

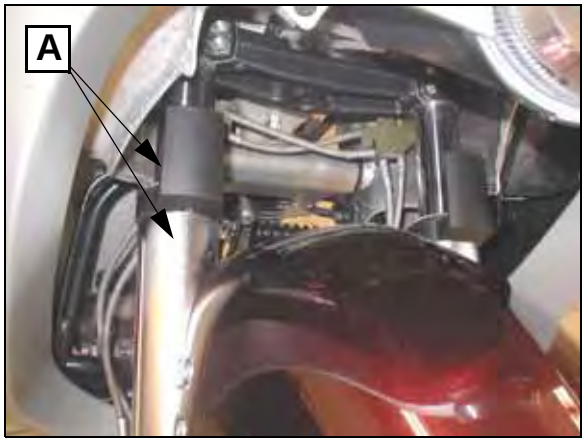

2. Clean fork tubes with mild soap and water as required to remove bugs, tar, or buildup which may cause seal wear or leakage.
3. Inspect outer surfaces of inner fork tubes for scoring, scratches, and damage from foreign objects.
4. With motorcycle upright, apply front brake and pump forks through travel range several times (B). Fork operation should be smooth and quiet.

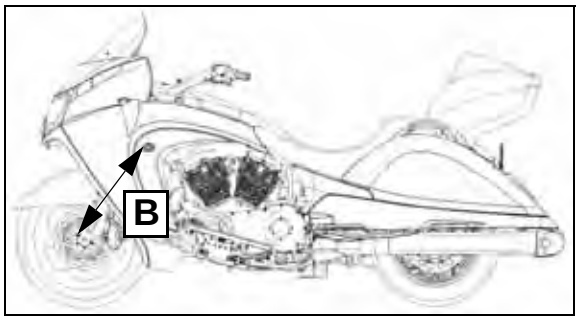

5. Verify all fasteners are tight. Refer to Chapter 12 for front wheel and suspension torque specifications, and Chapter 15 for brake system component torque specifications.
6. Replace worn or damaged parts.

STEERING HEAD / FRONT WHEEL INSPECTION

WARNING

Care should be taken to be sure the motorcycle will not tip or fall while elevated. Severe personal injury or death may occur if the motorcycle tips or falls.

NOTE: Be sure control cables, hoses and wiring are not interfering with handle bar rotation.

1. Secure motorcycle with front wheel elevated.
2. Turn handlebars from full left to full right and inspect for smooth, free movement.

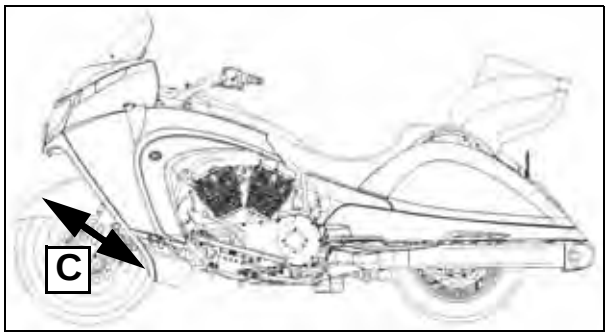

3. Point front wheel straight ahead, grasp fork tubes and pull/push fork tubes back and forth (C).
4. If steering binds, feels rough or uneven, or if movement is detected at steering stem, adjust or replace steering head bearings as necessary. Refer to Chapter 12.
5. Rotate front wheel and inspect for smooth rotation of front wheel bearings. If roughness or unusual sounds are present, replace front wheel bearings (Chapter 12).
6. Turn handle bars full right or left and hold against the fork stop. Attempt to move front wheel side-to-side (D). If movement is observed, inspect front axle, wheel, and bearings (Chapter 12).

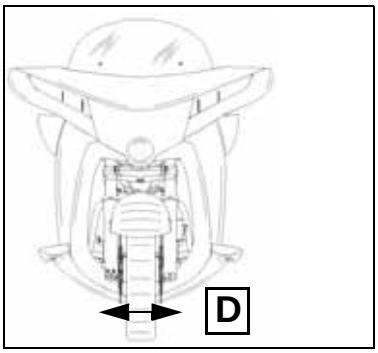

© 2009 Polaris Sales Inc.

FUSE REPLACEMENT

To access the relays and fuses:

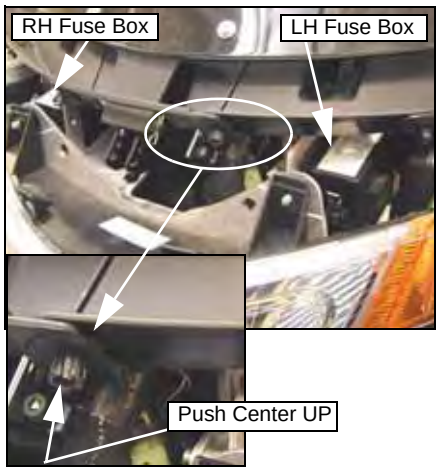

- Remove the windshield access panel (page 3.6).
- Push center of darts upward and remove the fuse box cover panel(s).
- Pull the tabs to release the cover(s).
- The fuse application and size is printed on the cover label.

NOTICE
Use only the recommended fuse to prevent electrical system damage.

FASTENERS

Inspect all fasteners on the vehicle to be sure they are tight. Refer to the appropriate chapter as required for torque specifications.

LOCK AND IGNITION SWITCH LUBRICATION

1. Insert spray nozzle of Victory Multi-Purpose Lubricant into the ignition switch and each lock cylinder and spray for 1-2 seconds.
2. Insert key and turn it to all positions to distribute the lubricant.
3. Wipe any excess lubricant from lock or switch.

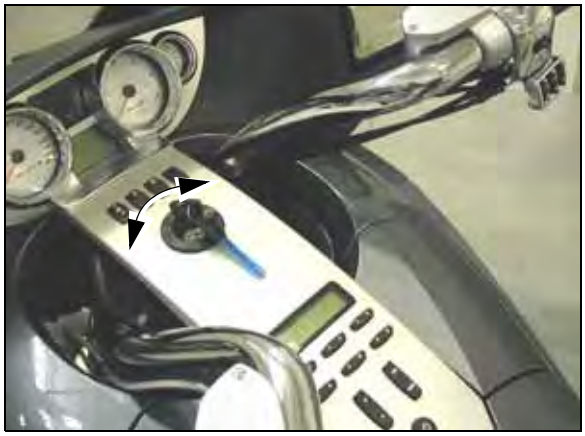

© 2009 Polaris Sales Inc.

CLEANING

NOTE: Refer to page 2.4 for Pure Victory Cleaning Product part numbers, and the Owner's Manual for more information. Pure Victory cleaning and polishing products and accessories have been specifically designed to offer the best care possible for a Victory motorcycle. In addition to the products recommended here, Pure Victory products are also available for removing scratches, scuffs, and swirls in paint or clear coat, cleaning or enhancing black or silver engines, cleaning tires and wheels, and removing brake dust.

Before washing the motorcycle, do the following:

- Be sure exhaust has cooled completely. Cover each pipe opening with a plastic bag secured with a strong rubber band to prevent water from entering exhaust system.
- Check that the spark plugs, spark plug wire caps, oil dipstick, fuel cap, and other filler caps are properly seated.
- Avoid spraying the air box / air filter area or electrical connectors and wiring.
- Removing excess dirt with water running at low pressure. Use as little water as possible when washing near the air intake or exhaust pipe openings. Dry thoroughly before starting the engine or operating the motorcycle.
- Make sure brakes are functioning properly before operating the motorcycle.
- Do not use abrasive cleaners. Paint wear or other cosmetic damage can occur if abrasives are used.

NOTICE

Electrical components may be damaged by water. Do not allow water to contact electrical components or connectors.

NOTICE

Do not use pressurized water to wash the motorcycle. Water may seep in and deteriorate wheel bearings and seals, brake caliper assemblies, brake master cylinders, electrical connectors, steering head bearings, and transmission seals if excessive pressure is used.

NOTICE

Do not use glass cleaners, water or soil repellents, and petroleum or alcohol based cleaners on the windshield (if equipped), as these products can damage the windshield.

WASHING, WAXING, POLISHING, APPLYING PROTECTANTS

(NOTE: For Windshield care and special information regarding care of Suede finish, see page 2.34.

WARNING

Do not use a protectant on the seats, handgrips, or footpegs that leaves a slippery coating after it dries. If these surfaces are slippery, you may have difficulty holding your position on the motorcycle while riding, which may cause you to lose control of the motorcycle. Follow manufacturer's instructions and safety precautions on wax, polish, and protectant labels to prevent injury or damage.

There are two styles of motorcycle washing and there is a Pure Victory Polish product for each style.

Bucket Wash

This is the conventional way of washing a motorcycle. Use Pure Victory Bike Wash Concentrate, a concentrated gentle product formulated to clean without diminishing the life of any durable polish. This product does not contain alkalis, acids or abrasives and is formulated to perform as a wetting agent to soften bugs, road grime and soil, and to prevent abrasion from a wash mitt or cloth. This product also decreases drying time without streaking or spotting. Follow complete directions on the label.

Spray- Rinse-and-Ride Wash

This is the new way to clean a Victory motorcycle quickly and easily, then resume riding. Pure Victory Spray Rinse and Ride bike wash is safe and will not harm any surface that water won't harm. This product can be mixed 50/50 with water for frequent washing. Spray the product on surface after they are cool to the touch. DO NOT spray on a hot motorcycle. When applied, this product softens dirt, soil, bugs, and road grime. Follow complete directions on the label.

Quick Clean-Ups

For quick clean-ups or when water is not available, use Pure Victory Spray & Wipe Instant Detailer, it's a complete spray and wipe product designed to clean and polish all surfaces, works quickly and easily, and is silicone-free so it leaves no oily or white residue. It provides protection from UV rays, acid rain, and dirt, will remove bugs, road tar, and road grime from windshields, painted parts, and chrome. It is safe for all surfaces, including pin striping, custom paint, murals, Plexiglas, Lexan, Acrylic or factory-coated windscreens. It's non-streaking, and it provides polish protection and a water repellent shine. Follow complete directions on the label.

© 2009 Polaris Sales Inc.

WINDSHIELD CARE

Rinse windshield with water to remove loose dirt and dust. Wash the windshield using one of the Pure Victory wash products described on page 2.33 (follow directions on the container for the product you choose) then rinse (if recommended in the directions) and wipe with a Pure Victory Microfiber Chamois or Plush Microfiber Towel to dry virtually spot free.

> NOTICE
>
> Do not use glass water and soil repellents, petroleum or alcohol based cleaners as these products can damage the windshield.

> NOTICE
>
> Windshield material is polycarbonate plastic. Do not use cleaners or rain protective products meant for glass surfaces on the windshield.

STORAGE

NOTE: Refer to page 2.4 **for cleaning products.**

To prevent storage damage due to long-term storage (60 days or more) the following guidelines should be followed.

1. Top off fuel tank with fresh fuel and add fuel stabilizer to fuel.
2. Run motorcycle for 15 minutes or more to distribute fuel stabilizer throughout fuel system.
3. Clean motorcycle completely.
4. Dry machine thoroughly and wax all painted surfaces.
5. Change engine oil as outlined in Chapter 2.
6. Block frame to take some of the weight off of front and rear wheels.
7. Secure a plastic bag over the exhaust outlets to prevent moisture from entering the exhaust system.

IMPORTANT: Make certain exhaust system is cool prior to securing plastic.

8. Remove battery and charge it.
9. Store battery in a cool, dry area and charge it once a month.
10. Cover motorcycle with a genuine Victory cover, or a covering made of fabric that allows for adequate ventilation. Do not use plastic or tarps, as corrosion may result.

IMPORTANT: Starting the motorcycle periodically during storage is not recommended. Water vapor is a by-product of the combustion process, and corrosion may result unless the engine is operated long enough to bring the oil and exhaust system to normal operating temperature.

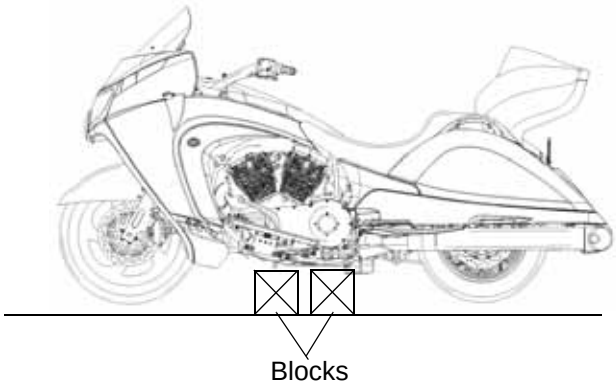

Set floor jack under the center of the engine. Raise vehicle off the floor and set 2 blocks underneath the bike as shown. Set bike down on blocks.

SUEDE FINISH CARE

Suede paint is different from Victory's usual high gloss finish. Like suede fabric, suede paint changes as you interact with the finish. It will change with time, exposure to elements, and use. Although the quality of the paint is not affected by these changes, special care is required when cleaning a suede finish.

Suede paint cannot be buffed out if it becomes scratched or scuffed. If polished, the finish will become less flat or matte. This finish cannot be repaired if it receives heavy damage like a scratch or a chip.

Suede Finish Cleaning Instructions

1. Spray Pure Victory Polish Suede Finish Cleaner (#90949) directly on all suede bodywork.
2. Using a Pure Victory Polish 100% Microfiber Polishing Towel (#90962), wipe cleaner into the surface, then wipe dry using a clean, dry surface of the towel.
3. After suede bodywork is clean and dry, apply Pure Victory Polish Suede Finish Protectant to maintain and protect the beauty of your Victory Motorcycle.

Suede Finish Protectant Instructions

1. Spray Pure Victory Polish Suede Finish Protectant (#90950) onto clean suede bodywork and use Polishing Towel (#90962) or Microfiber Applicator (#90965) to rub protectant thoroughly into the surface.
2. Using a clean, dry microfiber towel, wipe surface to achieve that showroom-new Suede Finish.

IMPORTANT: Be sure to apply Pure Victory Polish Suede Finish Protectant after every cleaning.

© 2009 Polaris Sales Inc.

CHAPTER 3
FRAME-BODY-EXHAUST

SAFETY 3.2
GENERAL INFORMATION 3.3
BODY FASTENER TYPES / SPECIAL TOOLS / HOW TO USE THIS CHAPTER 3.3
REMOVAL / INSTALLATION PROCEDURES - FRONT BODY 3.4
FRONT FENDER 3.4
CONSOLE COVER / AIR DEFLECTORS 3.5
IAC COVER / LEFT ENGINE COVER 3.6
WINDSHIELD ACCESS PANEL / WINDSHIELD 3.6-3.7
INSTRUMENT BEZEL 3.7
MIRRORS 3.8
VISOR 3.9
CONSOLE / SPEAKER GRILL / SPEAKER 3.10
FUEL TANK COVERS 3.11
BELLY PAN 3.11
LEG FAIRING AND GRILL 3.12
TURN SIGNAL LENS, FRONT 3.13
FAIRINGS (FRONT OUTER) 3.14
ASSEMBLY VIEWS - FRONT BODY 3.15
WINDSHIELD / WINDSHIELD MOTOR 3.15
BELLY PAN 3.16
CONSOLE / CONSOLE ATTACHMENTS 3.17
CONSOLE / RADIO 3.18
FRONT SUPPORT / SPEAKER / SPEAKER VOLUME 3.19
VISOR / FRONT SPEAKER GRILL 3.20
FUEL TANK COVER 3.21
LEG FAIRING / LEG FAIRING SUPPORT 3.22-3.23
FRONT TURN SIGNAL HEADLAMP / FAIRING 3.24
LOWER FRONT FRAME 3.25
BATTERY BOX 3.26
REMOVAL / INSTALLATION PROCEDURES - REAR BODY 3.27
SEAT / SIDE COVER 3.27
LOWER ACCESS PANELS (SADDLEBAG LOWER PANEL) 3.28
STREET TRIM PANEL REMOVAL / INSTALLATION 3.29
TRUNK REMOVAL / INSTALLATION 3.30
TAIL LIGHT TRIM (“M” PANEL) / REAR BUMPER COVER 3.31
TAIL LIGHT / TAIL LIGHT HOUSING 3.32
SADDLEBAG DOOR / SADDLEBAG (INNER BAG) 3.33
SADDLEBAG SUPPORT PLATE (PASSENGER HAND GRIP AND TRIM) 3.34
ASSEMBLY VIEWS - REAR BODY 3.35
TAIL TRIM “M” PANEL 3.35
TRUNK MOUNT AND ATTACHMENTS 3.36
TRUNK BASE / TRUNK LID 3.37-3.38
SADDLEBAG INNER 3.39
TAIL LIGHT / TAIL LIGHT HOUSING 3.40
FLOORBOARD / FOOT CONTROL MOUNTING 3.41
PASSENGER FLOORBOARD MOUNTING 3.42
LOWER ACCESS PANEL / PASSENGER HAND GRIP / SIDE COVER 3.43
EXHAUST SYSTEM 3.44
ASSEMBLY VIEW - EXHAUST SYSTEM 3.44
ASSEMBLY VIEW - MUFFLER & HEAD PIPE SHIELDS 3.45
EXHAUST MUFFLER 3.47
HEAD PIPE REMOVAL 3.47

© 2009 Polaris Sales Inc.

SAFETY

GENERAL PRECAUTIONS

This section covers the removal and installation of the frame body panels and exhaust system. Always replace exhaust system sealing gaskets when exhaust components are removed. Inspect the system for leaks after installation.

⚠ WARNING

Gasoline is extremely flammable and explosive under certain conditions.

Always stop the engine and refuel outdoors or in a well ventilated area.

Do not smoke or allow open flames or sparks in or near the area where refueling is performed or where gasoline is stored.

Do not overfill the tank. Do not fill the tank neck above the fuel tank insert. Leave air space to allow for fuel expansion.

If you get gasoline in your eyes or if you swallow gasoline, see your doctor immediately. Never try to syphon gasoline using mouth suction.

If you spill gasoline on your skin or clothing, immediately wash it off with soap and water and change clothing.

Never start the engine or let it run in an enclosed area. Gasoline powered engine exhaust fumes are poisonous and can cause loss of consciousness and death in a short time.

⚠ WARNING

The engine exhaust from this product contains chemicals known to cause cancer, birth defects or other reproductive harm.

⚠ WARNING

Improper repairs or service can create unsafe conditions that may cause serious injuries or death to your customers or others.

⚠ WARNING

Never run the engine in an enclosed area without a properly functioning exhaust gas evacuation system connected to the product.

⚠ WARNING

Engine and exhaust components get hot and remain hot for a period of time after the engine is stopped. Wear insulated protective clothing or wait for components to cool sufficiently before working on the machine.

⚠ WARNING

Engine exhaust from this product contains poisonous carbon monoxide gas that can cause loss of consciousness and may lead to death.

⚠ WARNING

Modifications to this motorcycle not approved by Victory may cause loss of performance, excessive emissions, and make the machine unsafe for use.

© 2009 Polaris Sales Inc.

GENERAL INFORMATION

BODY FASTENER TYPES

NOTICE
Review the following general information before removing body panels to reduce the chance of cosmetic damage to the motorcycle.

With a few exceptions, body panels and trim on the Victory Vision are fastened by two main fastener types - a 4mm internal hex button head and a 6mm internal hex button head shown below. A ball drive socket is needed for some fasteners located in areas of limited clearance. Note locations and fastener types during removal and refer to assembly views.

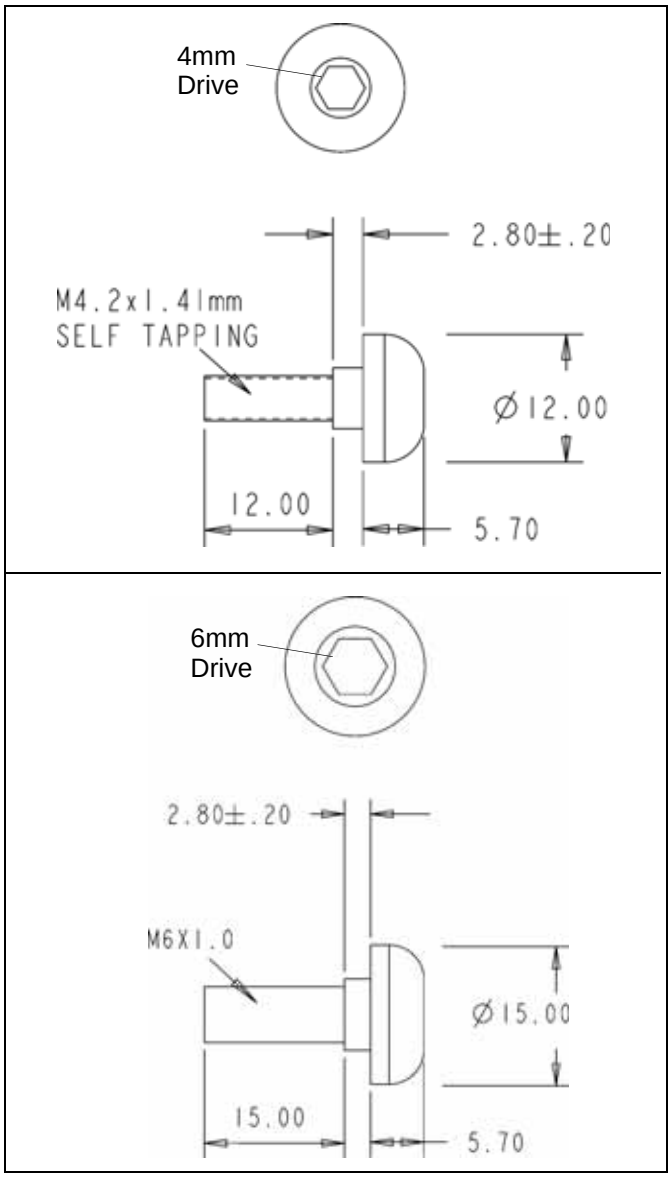

Also used on the Victory Vision are fasteners with 10mm and 13mm hex drive heads common to other Victory models.

SPECIAL TOOLS

- PV-49955 Body Panel Tool Kit or commercially available equivalent.

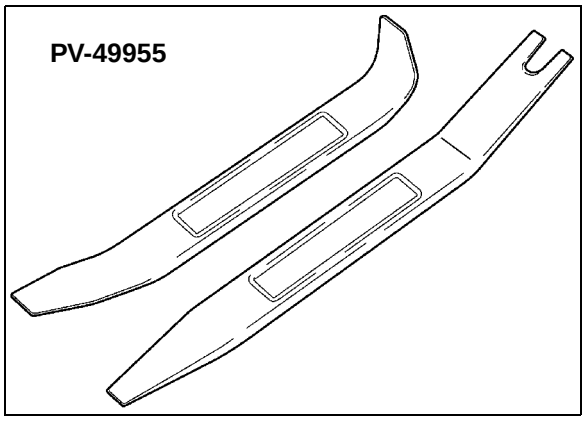

HOW TO USE THIS CHAPTER

- Body components in this chapter are arranged by their general location on the motorcycle - either FRONT or REAR body.
- For torque values of fasteners, fastener type, fastener location, and special notes refer to the Assembly View for the component or group of components if torque is not listed in the procedure.
- For specific removal and installation procedures refer to the instructions for the individual component.
- Use care when removing and installing panels. Some panels friction-fit tabs in addition to mechanical fasteners. Apply pressure as close to the tab as possible, supporting both parts until the tab releases or connects.
- Work carefully and review the removal procedure until you are familiar with bodywork removal procedures.
- A non-marring wedge is essential to lift edges of mating panels without damage. Body Panel Tool Kit PV-49955 recommended. The instrument bezel and dash panel are two panels that require this tool.

© 2009 Polaris Sales Inc.

REMOVAL / INSTALLATION PROCEDURES - FRONT BODY

FRONT FENDER

Removal

1. Lift center of each dart (A) and remove darts.
2. Remove upper fender screws (B).
3. Remove lower fender screws (C).

Installation

1. Install lower fender to fork legs. Tighten (2) mounting screws finger tight until stepped flange engages the fender. Do not fully tighten.
2. Install upper fender to fork legs. Start all (4) screws until stepped flange engages the fender but do not fully tighten.
3. Align upper and lower fender and install darts.
4. Torque upper fender screws, then lower fender screws to specification.

Front wheel removal see Chapter 12

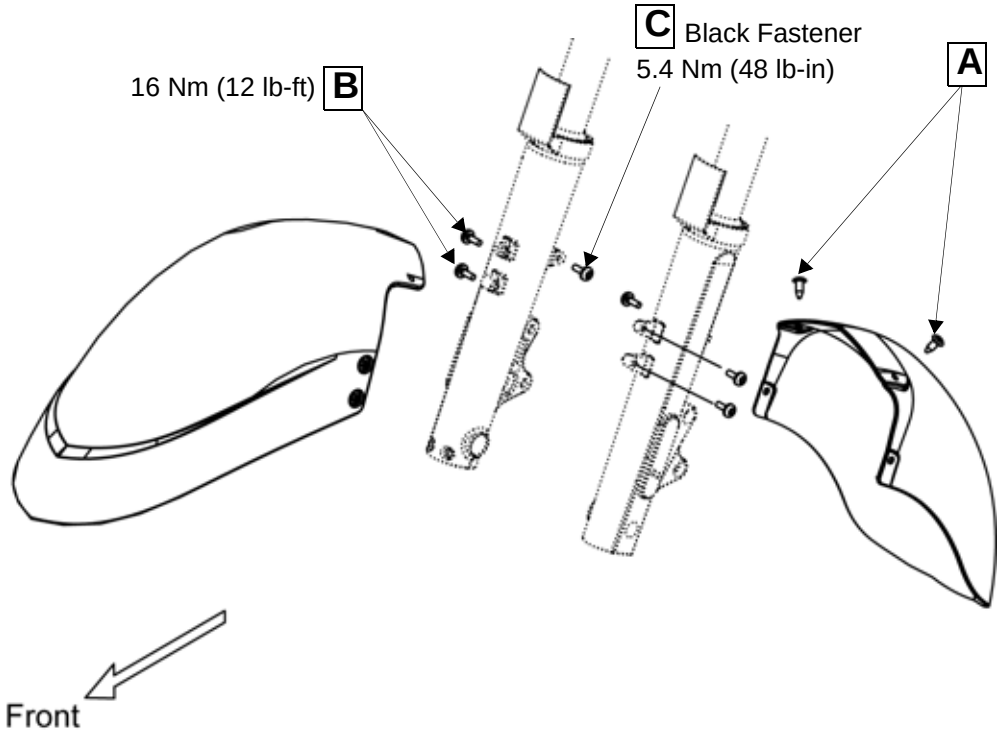

© 2009 Polaris Sales Inc.

CONSOLE COVER

Removal

1. Open glove compartment door and fuel door.
2. Lift the rear console cover straight upward at each corner to remove it. Do not tip the panel backward.

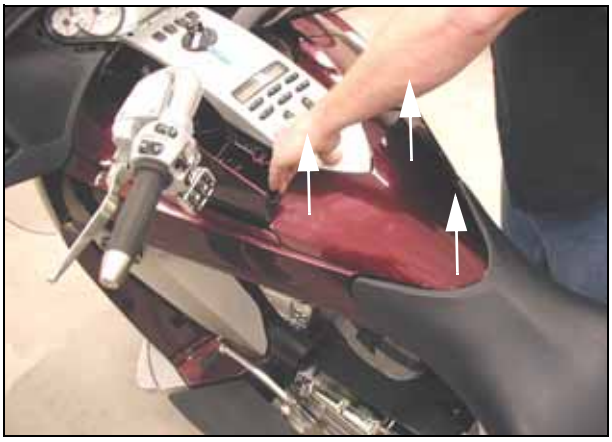

Installation

1. Lubricate grommets with soap and water solution.
2. Align pegs with grommets.
3. Push cover evenly downward until seated.

AIR DEFLECTORS

Removal

1. Rotate deflector fully outward to allow easier access to rear screw.

2. Remove (2) T-20 Torx screws that attach deflector to pivot hub.

Installation

1. Place deflector in position, align holes and install screws.Tighten evenly to 1.6 Nm (14 lb-in).

© 2009 Polaris Sales Inc.

IAC COVER / LEFT ENGINE COVER

Removal

1. Grasp left engine or Idle Air Control (IAC) cover (right side) and pull outward to release 3 clips (A).

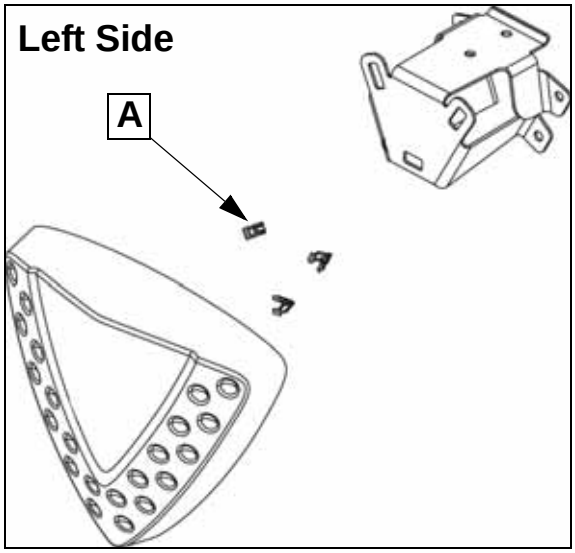

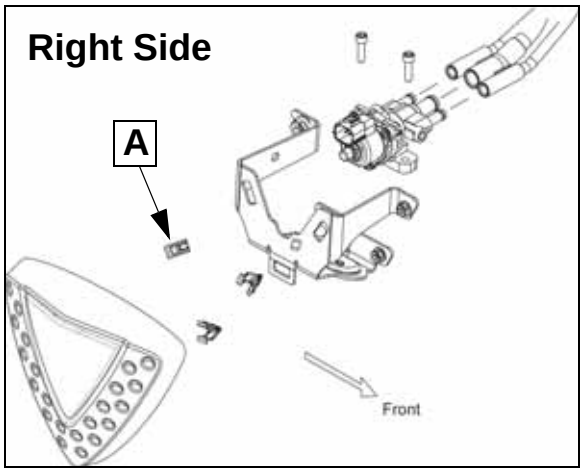

Installation

1. Be sure clips are in place and in good condition. Push cover evenly inward until seated.

WINDSHIELD ACCESS PANEL

With access panel removed, you can access:

- Fuse boxes
- Windshield adjustment mechanism or motor
- Headlamp adjustment knob
- Front turn signal bulbs
- Fasteners for mirrors and other components.

1. Release corners of panel by lifting straight upward at each end (1).
2. Carefully slide panel toward windshield to disengage lower tabs (2) and remove panel.
3. Disconnect antenna cable (3) (front right of panel).
4. To install, reverse above steps.

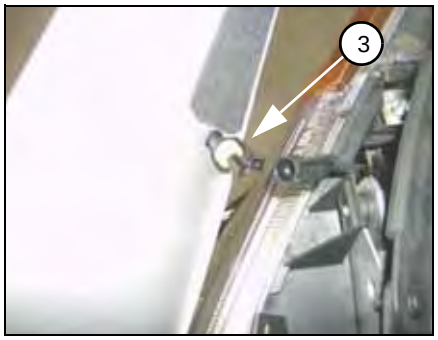

© 2009 Polaris Sales Inc.

WINDSHIELD

Removal

Refer to Assembly View page 3.15.

1. Remove windshield access panel (page 3.6).
2. Loosen all screws (A) about 1 turn.
3. Support windshield. Remove screws. Catch T-nuts (B) as screws are removed.

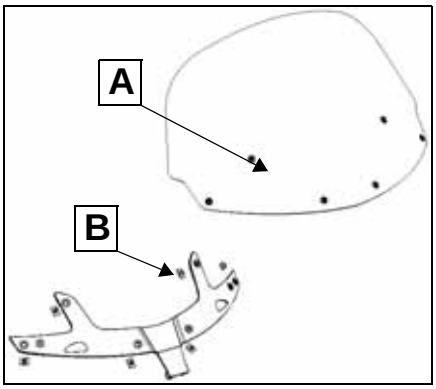

Installation

1. Place new foam washers over center of (3) holes (C) and single dimple (D) on each side (total 8 washers).

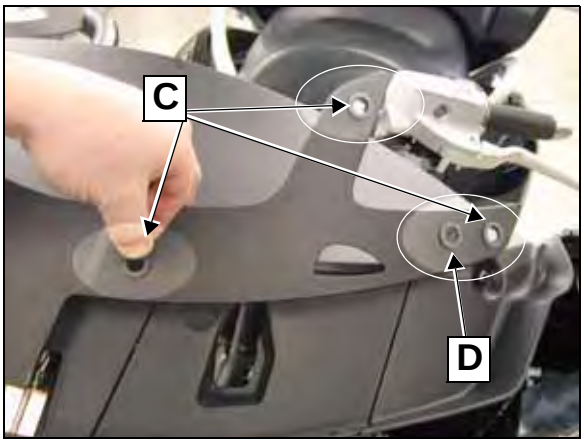

2. Place windshield in position and align screw holes.
3. Loosely install all screws and T-nuts. Do not tighten any screw until all are installed, then lightly tighten each screw past shoulder.
4. Starting in the center of windshield, tighten each screw to 4 Nm (36

IMPORTANT: Windshield will crack if foam washers are not in place or if screws are over-tightened.

5. Install access panel.

INSTRUMENT BEZEL

Removal

1. Use a non-marring tool such as PV-49955 Body Tool Kit (shown) or an auto body windshield tool as a wedge.

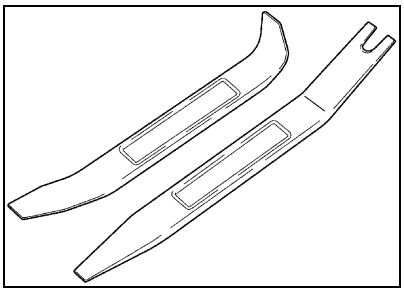

2. Lift both sides of bezel away from dash, then pull straight outward with fingers on each side to release bezel retainer tabs.

Installation

1. Align tabs with slots.
2. Push bezel straight inward until seated.

© 2009 Polaris Sales Inc.

MIRRORS

Refer to Assembly View page 3.20.

1. Remove windshield access panel (page 3.6).
2. Remove (A) (6mm hex).

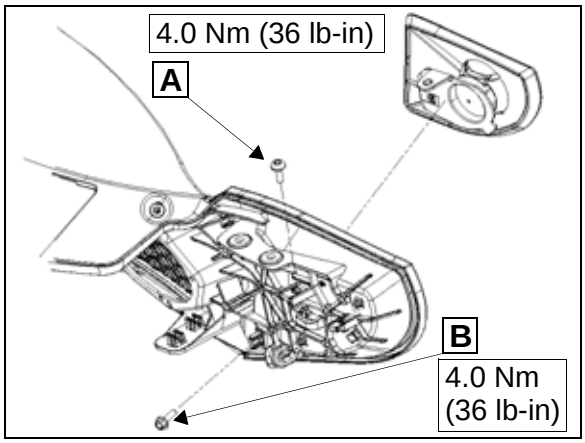

3. Hold mirror so it does not fall out and remove (B) with a 10mm socket.

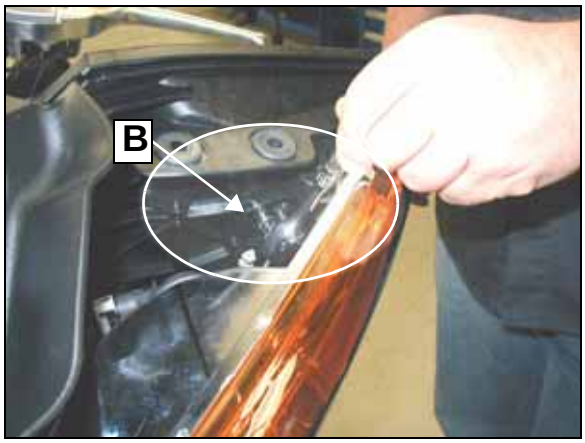

Installation

1. Engage tab (C) of mirror in slot (D) of housing.
2. Install screws and windshield access panel.

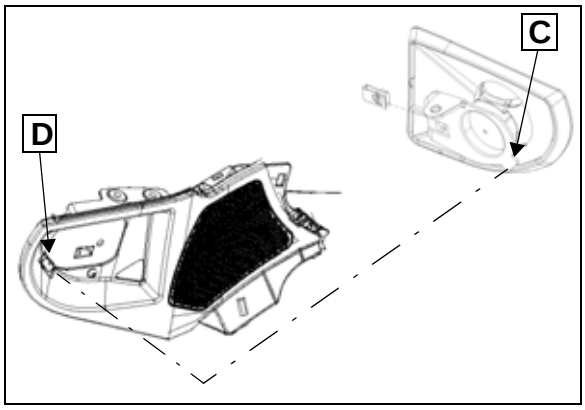

© 2009 Polaris Sales Inc.

VISOR

Removal

Refer to Assembly View page 3.20.

1. Remove windshield access panel (page 3.6).
2. Lift center pin of fuse box cover darts (A) and remove darts and covers.
3. Move windshield to fully UP position.
4. Remove (4) screws (B) (4mm hex).

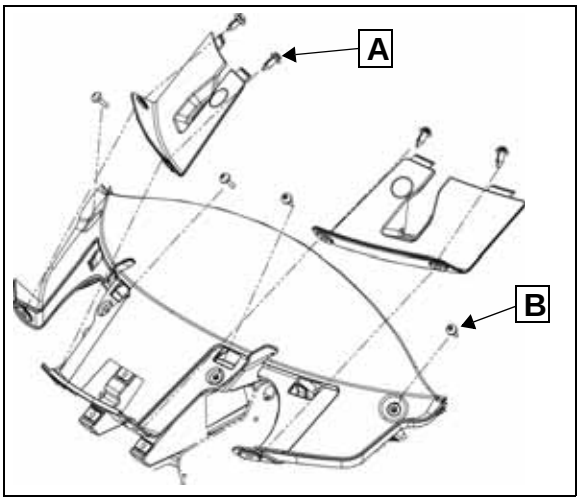

5. Pull outer edge of visor rearward and upward to separate one edge (C). Slide body tool inward to lift front edge and separate front lip of visor.

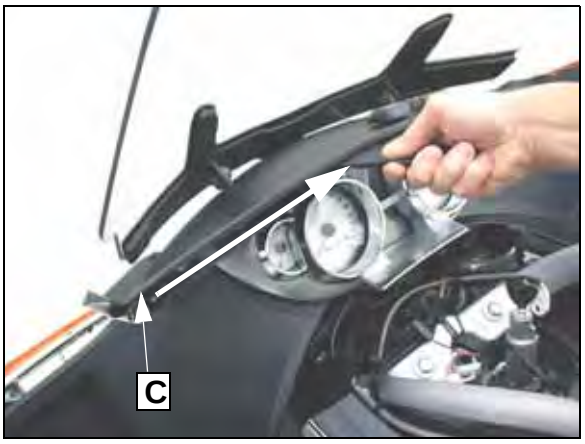

6. Remove windshield bracket adjustment pin (on manual windshield) or bolt (motorized).
7. Tip windshield bracket rearward.
8. Slide visor panel up and out toward rear.

Installation

1. Slide visor into place. Tip windshield to align bracket holes and install pin (manual) or bolt (motorized).
2. Install pin retaining clip (manual) or torque bolt (motorized) to 16-19 Nm (12-14 lb-ft).
3. Generally align visor screw holes so tabs (D) in center of panel support are engaged with visor slots.
4. Hold downward pressure on center of visor to be sure slots engage tabs.

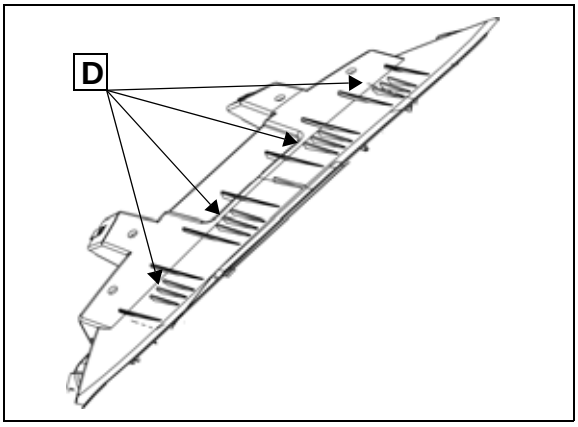

5. Snap top edge into place on panel support, starting at center and working outward to edges until visor is secured.

6. Install visor screws and torque to 4.0 Nm (36 lb-in).

© 2009 Polaris Sales Inc.

CONSOLE

Removal

Refer to Assembly View page 3.17.

1. Remove instrument bezel (page 3.7).
2. Open fuel door and glove compartment.
3. Remove (5) console screws (4mm & 6mm hex). Note location of ground wire (A) under right rear screw.

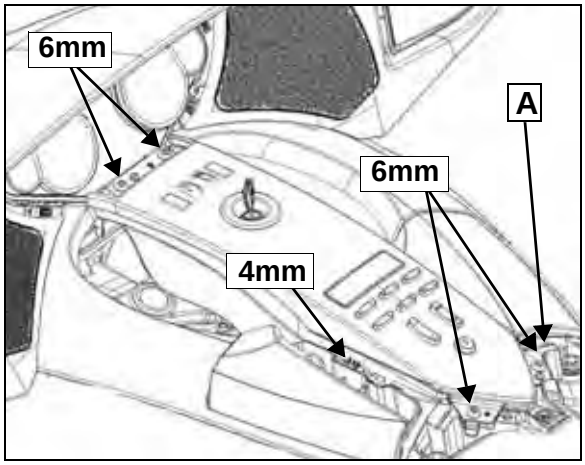

4. Lift console up and lay it on a protective pad on the left side.
5. Disconnect wires from each switch at front of console, noting wire colors and locations for assembly. Wire connections are shown below (as equipped).

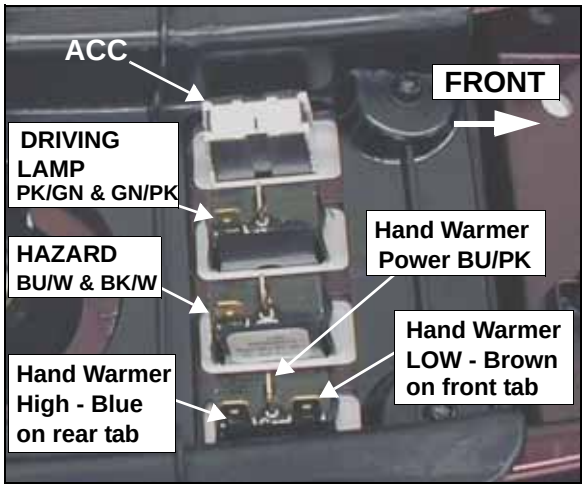

6. Disconnect antenna cable from radio.
7. Disconnect wire harness from radio by pushing side tab to release connector.

Installation

1. Reverse removal steps to install.

SPEAKER GRILL / SPEAKER

Removal

Refer to Assembly View page 3.19.

1. Remove instrument bezel (page 3.7), windshield access panel (page 3.6), and mirrors (page 3.8).
2. Remove (3) 4mm button head screws.

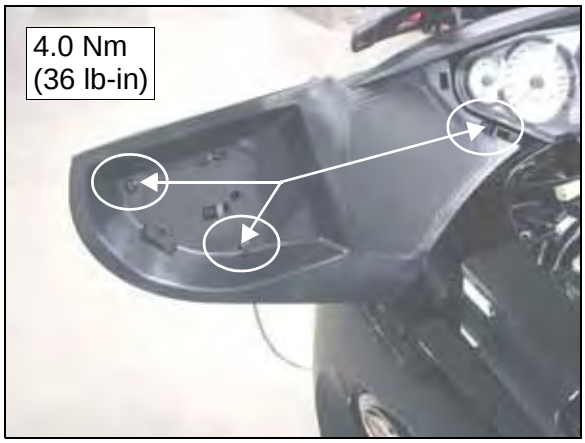

3. Pull panel straight outward to release tabs.
4. Mark corner of speaker and housing, or note orientation of speaker in housing for installation. Remove (4) speaker screws and speaker.

Installation

1. Connect “+” (wide) and “-” (narrow) speaker wires.
2. Install speakers (if removed) with wires oriented to upper inside quadrant (B). Install speaker screws. Tighten evenly to 1.7 Nm (15 lb-in).
3. Align clips with slots press grill into place.
4. Install screws.
5. Install mirror(s), windshield access panel, and bezel.

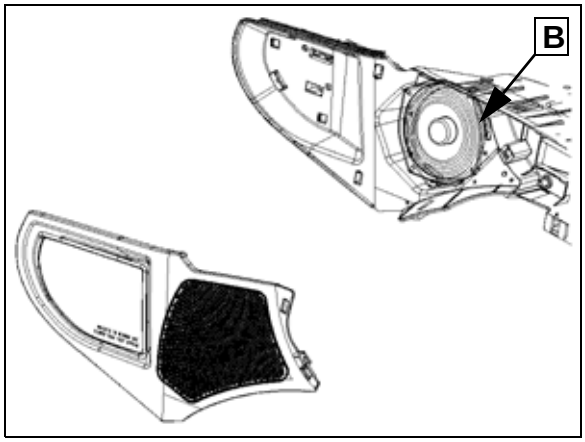

© 2009 Polaris Sales Inc.

FUEL TANK COVERS

Removal

Refer to Assembly View page 3.21.

1. Remove console (page 3.10).
2. Remove studs (A) on each side of tank cover panels (13mm wrench).

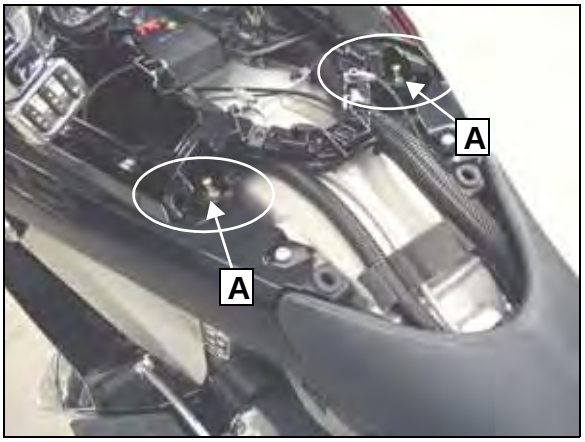

3. Remove screw (B) at front left corner of glove compartment and (C) at front right corner of fuel door (6mm hex).
4. Remove screws (D) at front (6mm hex).

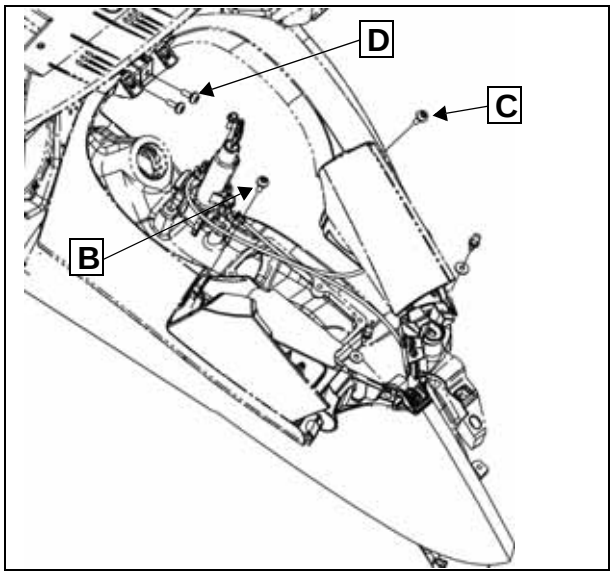

5. Disconnect cables from ignition switch by lifting outer casing out of bracket and rotating cable wire to align with slot.

NOTE: Fuel door cable can be disconnected at the cover end by lifting cable out of bracket and pulling cable and door latch plunger out of cover.

6. 2008-2009: Lift green tab UP with a scribe or small screw driver just far enough to disengage lock tab. 2010: Push tab down to release from catch. Disconnect accessory power wire(s) from socket on bottom of left panel.

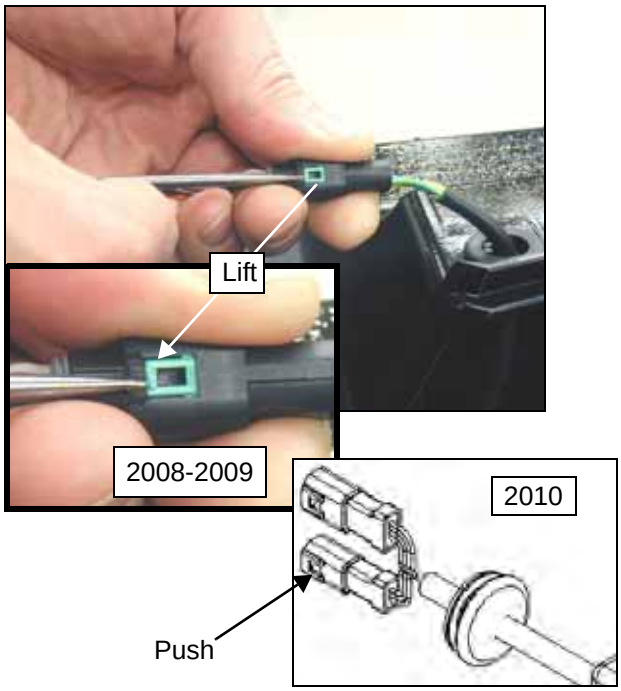

BELLY PAN

Removal

Refer to Assembly View page 3.16.

1. Remove screw (E) from center belly pan (6mm hex).
2. Remove screws (F) on each side (6mm hex).

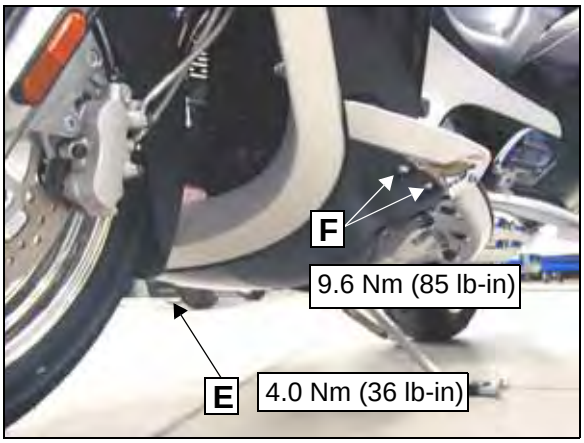

Installation

1. Align pan and install all screws until lightly seated. Do not tighten any screws until all are installed.
2. Torque four outer screws to 9.6 Nm (85 lb-in) and center screw to 4.0 Nm (36 lb-in).

© 2009 Polaris Sales Inc.

LEG FAIRING

NOTE: Inner and outer leg fairings are removed as an assembly with grills attached. Refer to Assembly View page 3.22.

1. Remove air deflectors (page 3.5) and fuel tank covers (page 3.11)
2. Remove two screws that secure tip-over boards to support brackets on each side (6mm hex).

3. Remove belly pan (page 3.11).
4. Remove center grill bolt.

5. Remove front grill screws near headlamp housing.

6. Remove the screws at the front and rear of each outer leg fairing.

7. Pull top of leg fairing / grill assembly straight out to release center tab (A).

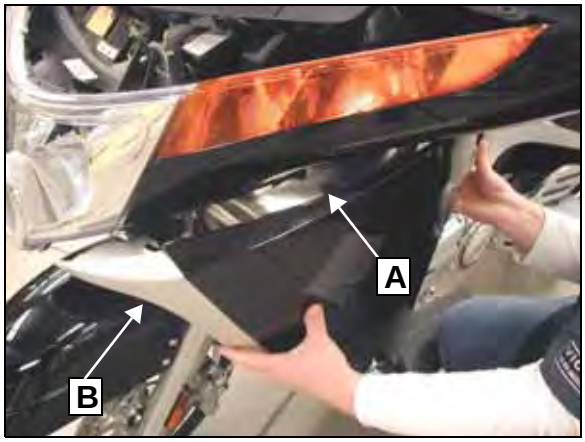

8. Slide assembly forward carefully until it clears footrest and seat. Disconnect lit badge wire harness (if equipped).

GRILL

1. Follow instructions for leg fairing removal to remove grill (B, above) and leg fairing as an assembly. Then remove grill from leg fairing. Refer to page 3.22 for fastener torques.

© 2009 Polaris Sales Inc.

TURN SIGNAL LENS, FRONT

Removal

1. Remove windshield access panel (page 3.6) and fuse box covers.
2. Rotate turn signal and running light bulb sockets 1/4 turn counterclockwise (viewed from rear) and remove sockets with bulbs.
3. Remove visor (page 3.9).
4. Remove speaker grills and speakers (page 3.10).
5. Remove (2) darts (A) to release speaker volume.
6. Rotate speaker volume (B) to clear fuse box and remove speaker volume for access to lower turn signal screw.

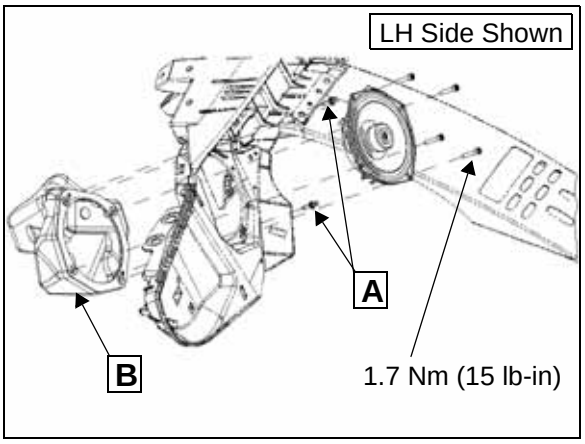

7. Remove inner screw (C) (6mm internal hex).
8. Remove outer screw (D) (10mm wrench) and two lower screws (E) (10mm socket).

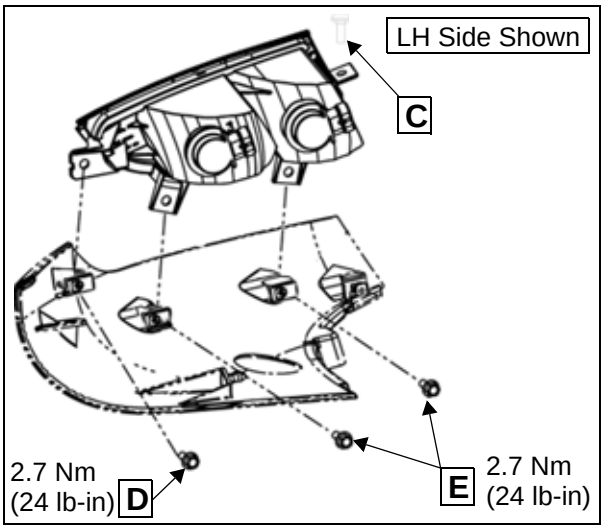

9. Carefully lift outside end of turn signal assembly upward while pulling inside end forward slightly to disengage peg (F) on headlamp housing from alignment hole (G) of turn signal lens.

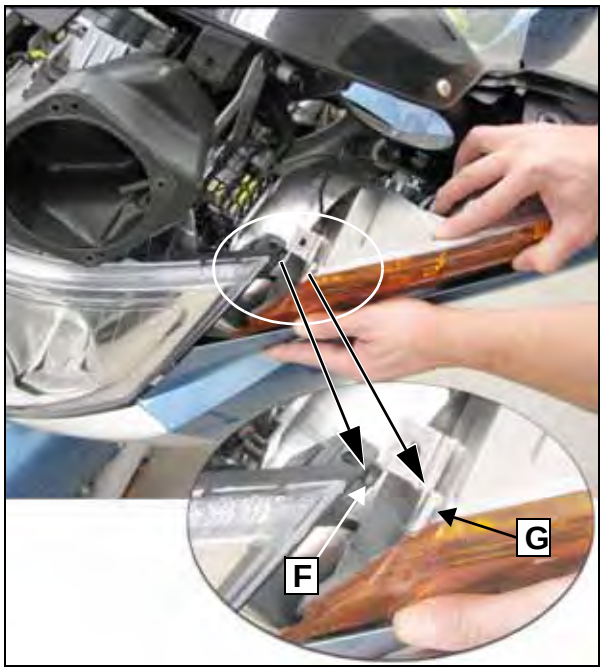

Installation

1. Engage hole on inside front edge of lens with peg on headlamp housing and set signal lens in place.
2. Install all screws and tighten to specification.
3. Place speaker volume in position and install two darts to hold it in place.
4. Install speaker, speaker grill, mirror, visor, and instrument bezel.
5. Connect / install turn signal and running light bulbs.
6. Install fuse box cover and windshield access panel.

© 2009 Polaris Sales Inc.

FAIRINGS (FRONT OUTER)

Removal

1. Remove windshield access panel (page 3.6).
2. Remove fuse box covers.
3. Remove left and right leg fairings (page 3.12).

NOTE: Both leg fairings and headlamp can be removed as an assembly by removing the four headlamp mounting bolts and outer fairing screw (D) only.

4. Remove inner screw (A) and outer screw (B) from each fairing (6mm internal hex).
5. Remove screw (C) from inner corner of each fairing (4mm internal hex).

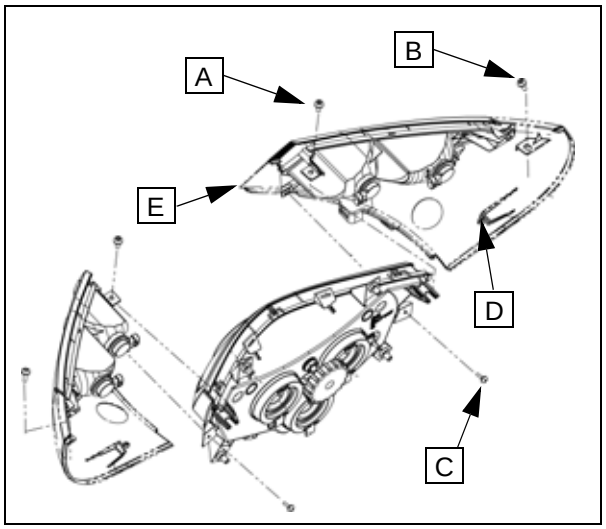

6. Pull rear corner out to disengage peg (D) from grommet.
7. Pull fairing forward to disengage peg (E) at headlamp.
8. Rotate bulb socket 1/4 turn and remove socket from lens.

Installation

1. Reverse removal steps. Be sure to engage peg (E) at front inner edge of fairing before fitting the grommet peg (D).
2. Refer to page 3.24 for fastener torques.

INSTRUMENT DISPLAY

Removal

1. Remove windshield access panel (page 3.6) and radio console (page 3.5).
2. Follow steps to remove left and right fuel tank cover fasteners (page 3.11) so covers are loose and can be moved rearward when necessary later. It is not necessary to remove the covers completely.
3. Locate instrument cluster electrical connector through the left side of the windshield access panel opening.
4. Lift front edge of red lock tab (A) on instrument cluster electrical connector and slide it out (forward). Push gray tab and pull connector off display.

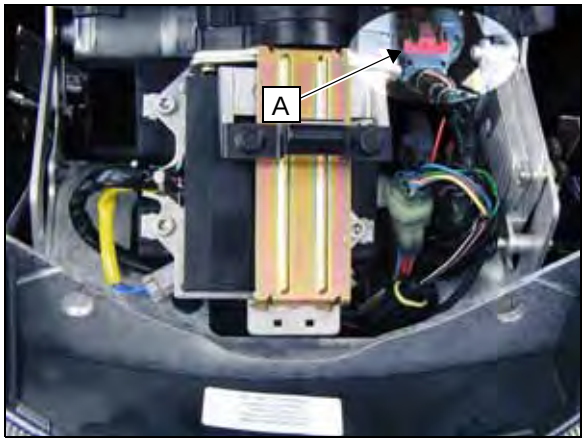

5. Lift front tab of fuel tank covers to disengage them from each other and slide the covers rearward. Set front edges of tank cover under screw boss on fairing shell to keep them out of the way for instrument removal.
6. Loosen all four instrument mounting screws. Remove screws one at a time, using a magnet or shop cloth to catch the T-nut in the fairing shell as each screw is removed. DO NOT drop T-nuts.
7. Pull display straight rearward to remove

Installation

1. Be sure grommets and spacers are in place on instrument display.
2. Reverse removal steps to install. Tighten mounting screws to 4 Nm (36 lb-in).

© 2009 Polaris Sales Inc.

ASSEMBLY VIEWS - FRONT BODY

WINDSHIELD / WINDSHIELD MOTOR

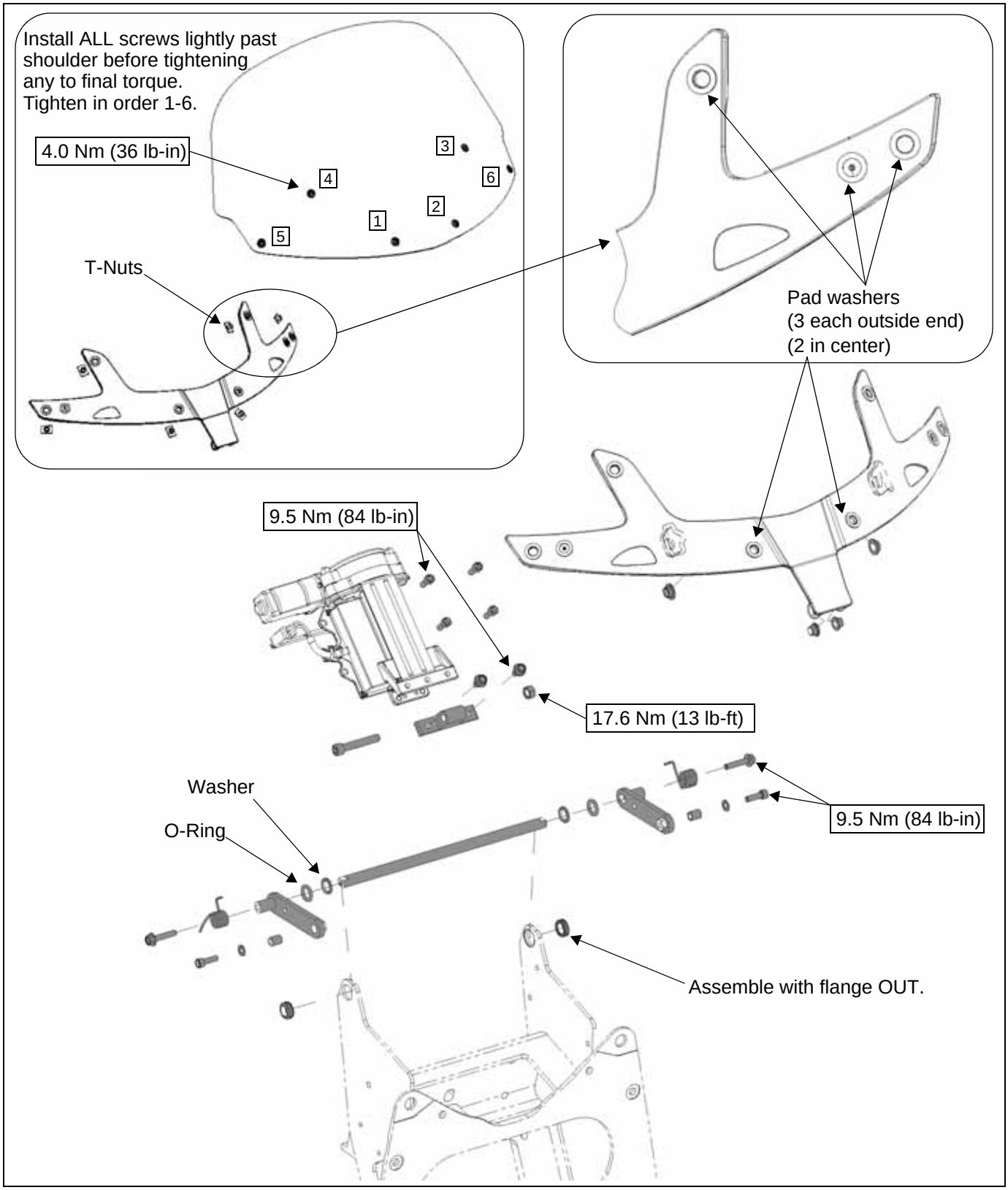

© 2009 Polaris Sales Inc.

BELLY PAN

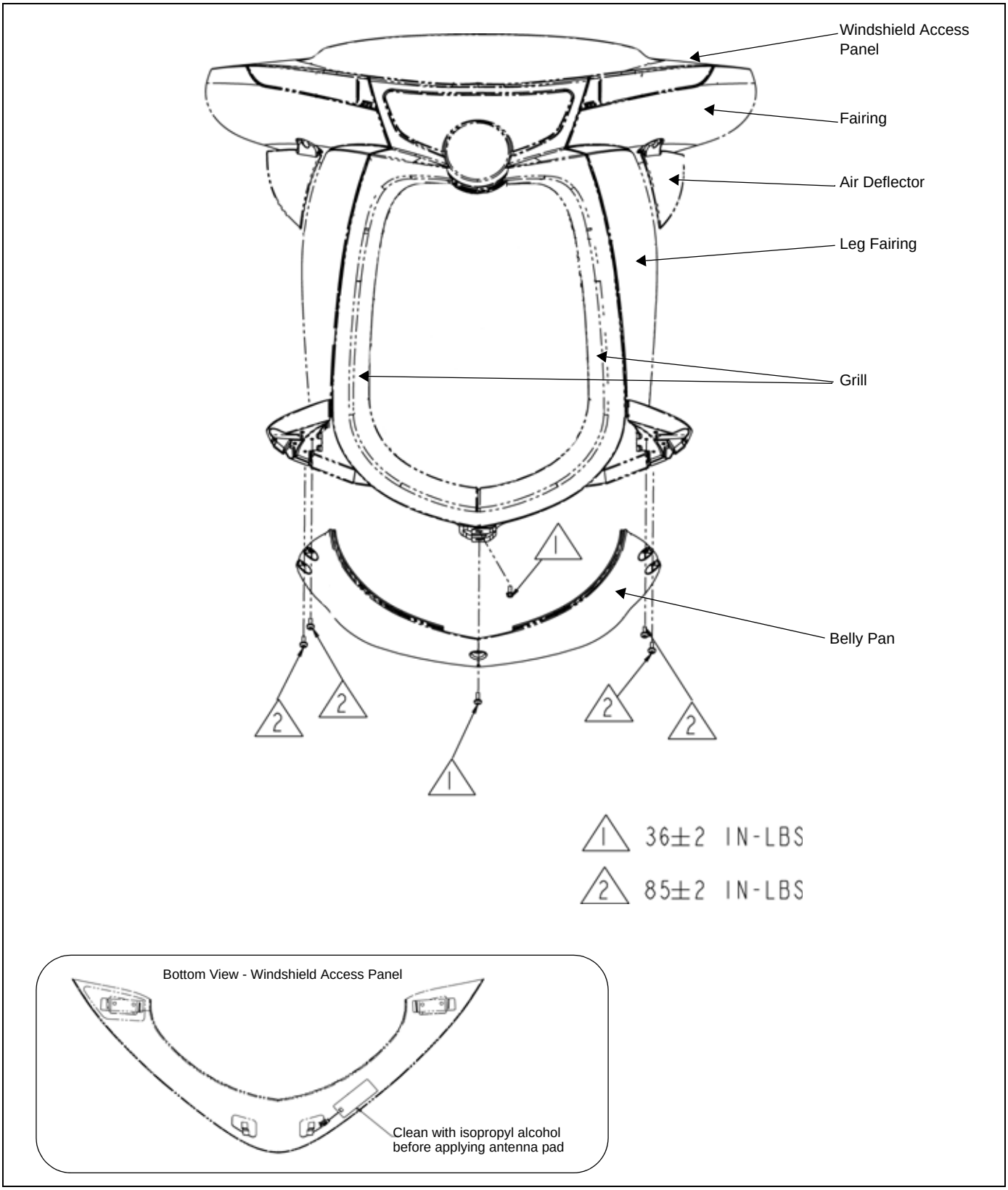

© 2009 Polaris Sales Inc.

CONSOLE / CONSOLE ATTACHMENTS

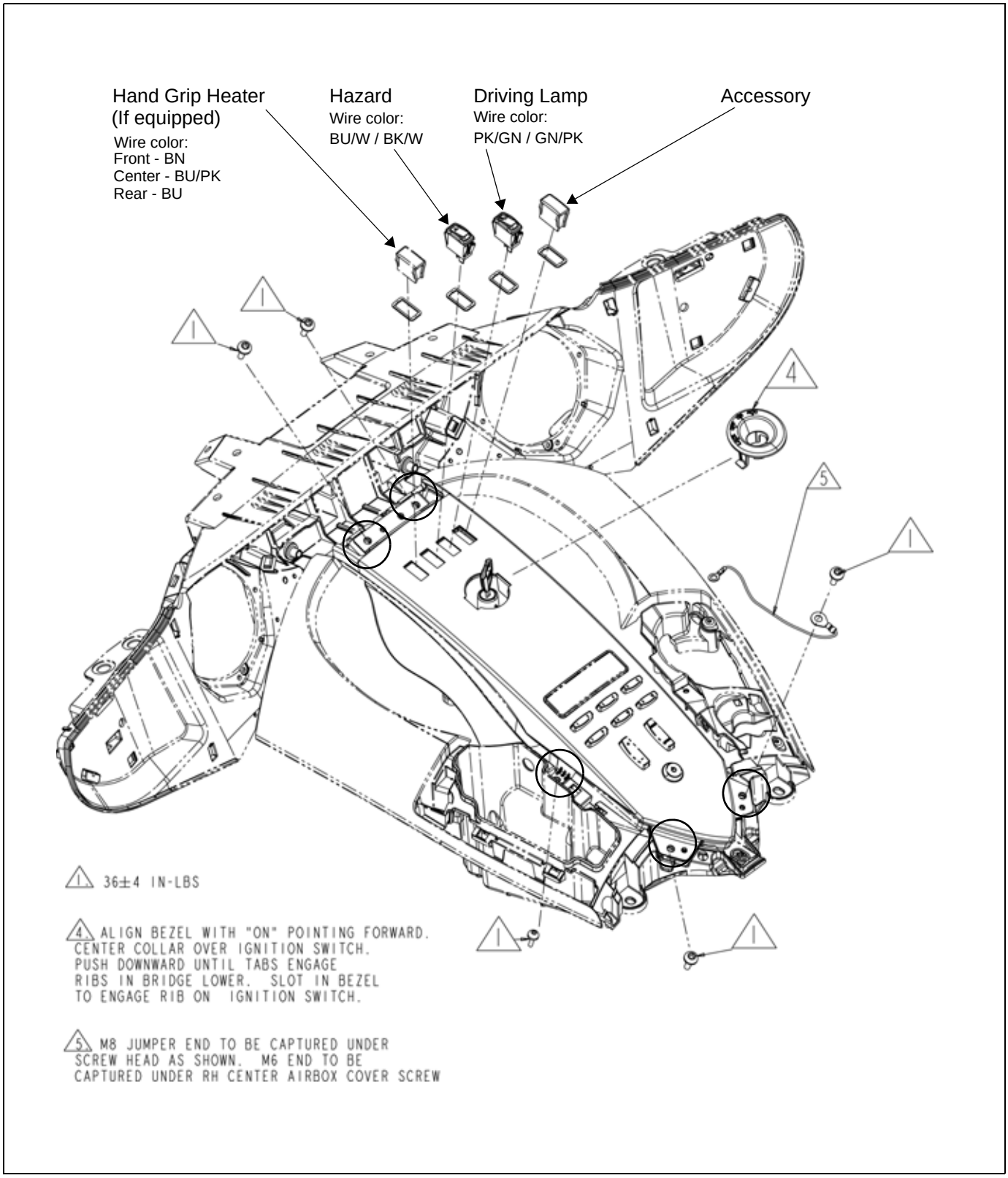

© 2009 Polaris Sales Inc.

CONSOLE / RADIO

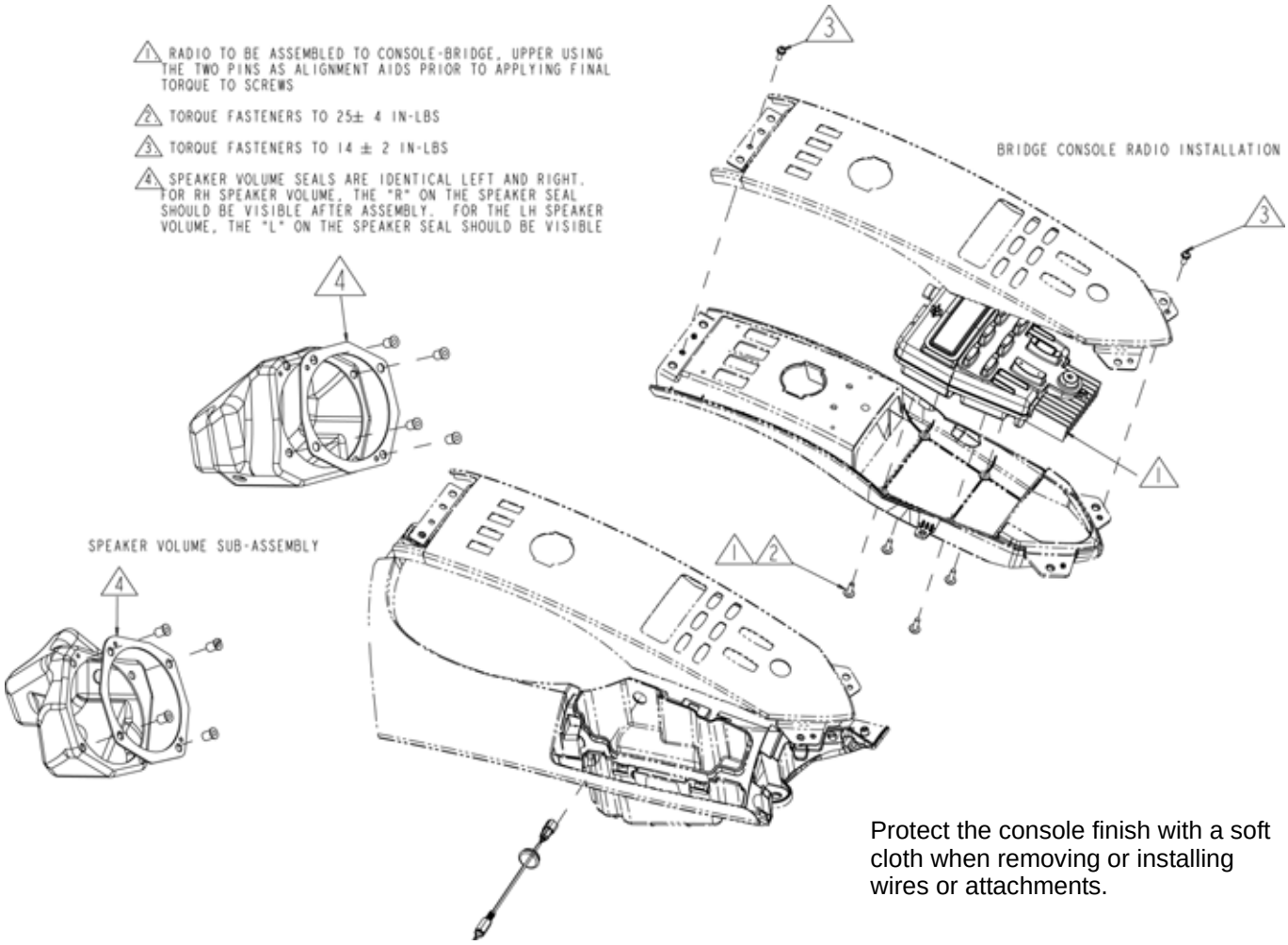

Protect the console finish with a soft cloth when removing or installing wires or attachments.

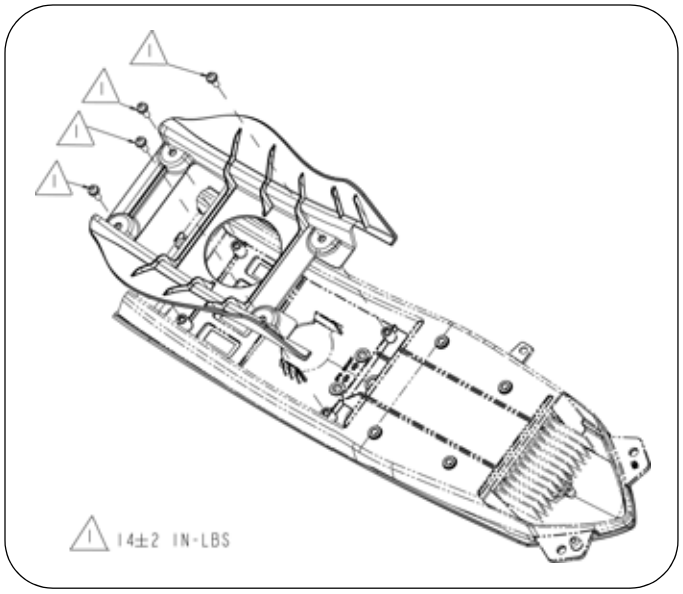

© 2009 Polaris Sales Inc.

FRONT SUPPORT / SPEAKER / SPEAKER VOLUME

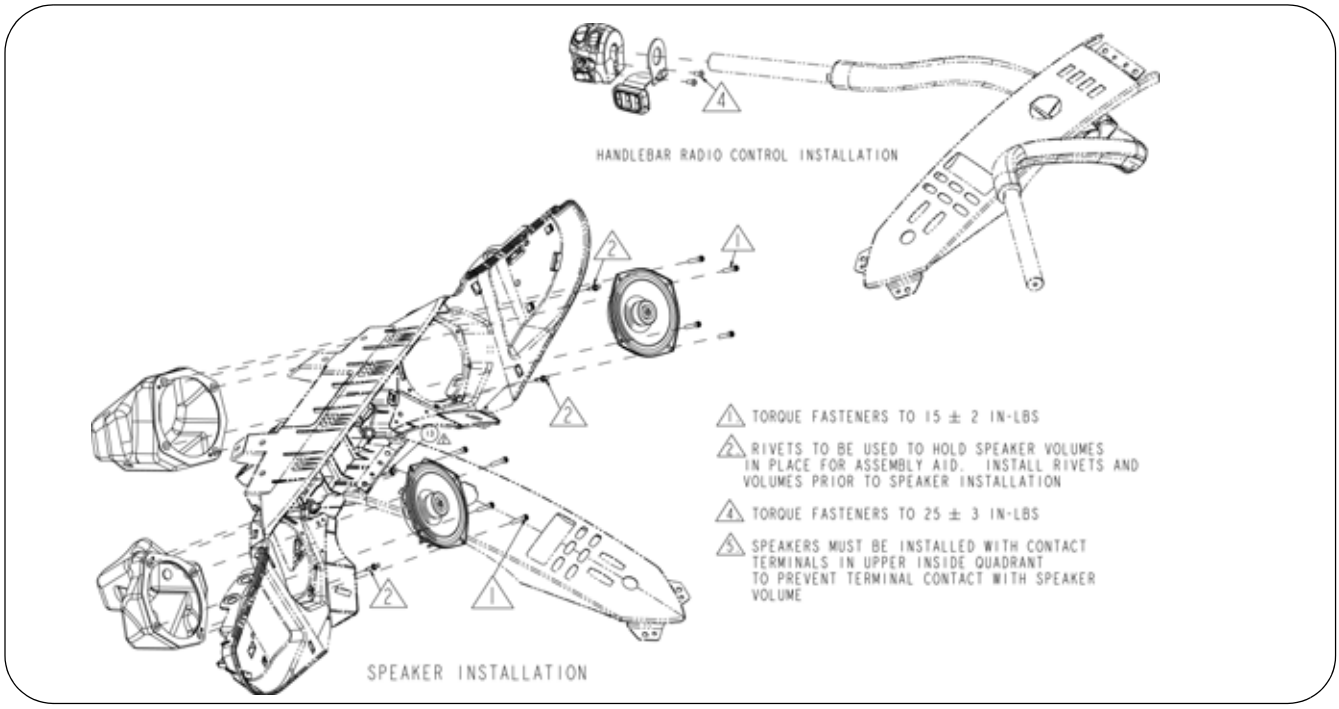

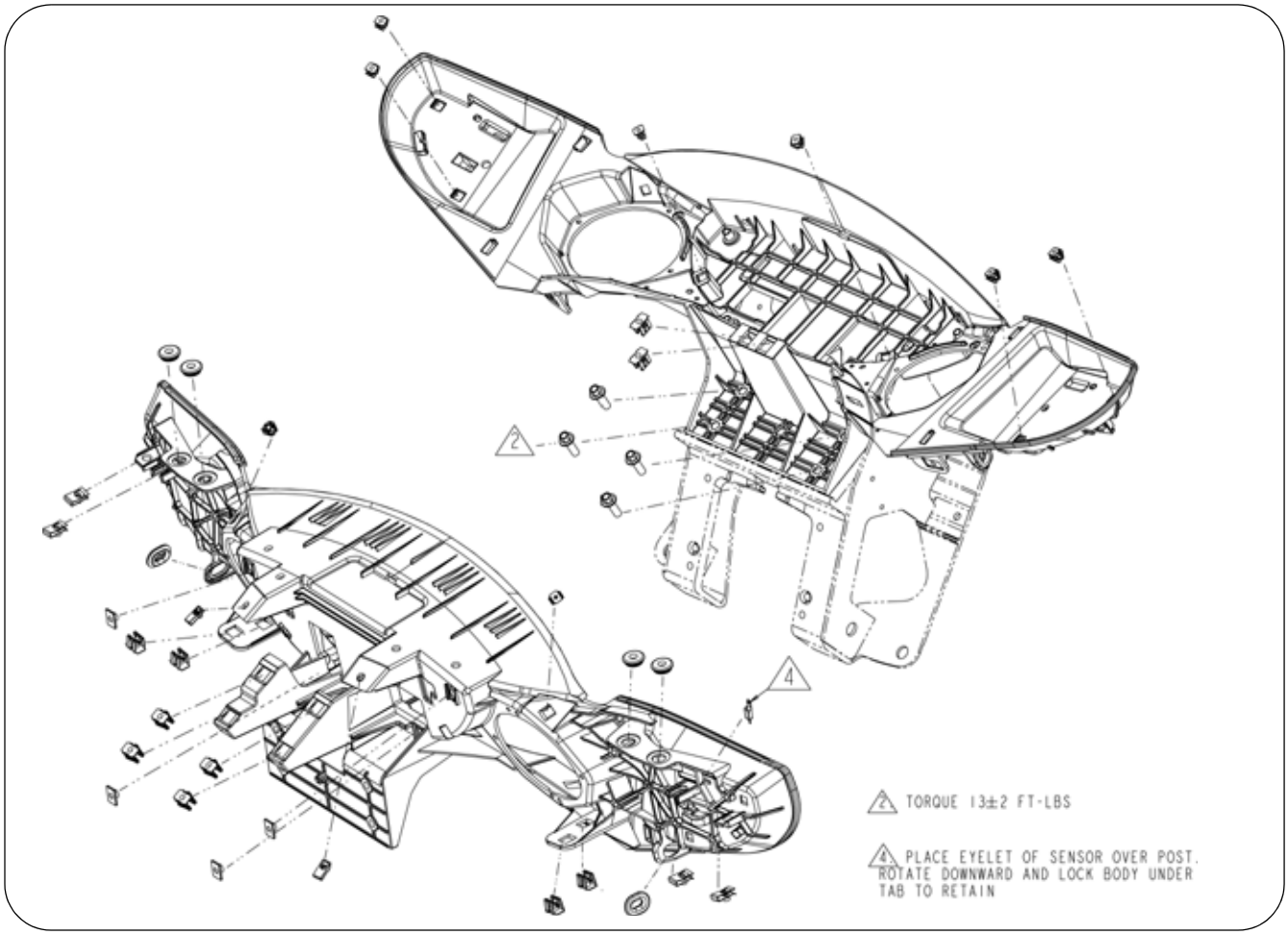

© 2009 Polaris Sales Inc.

VISOR / FRONT SPEAKER GRILL

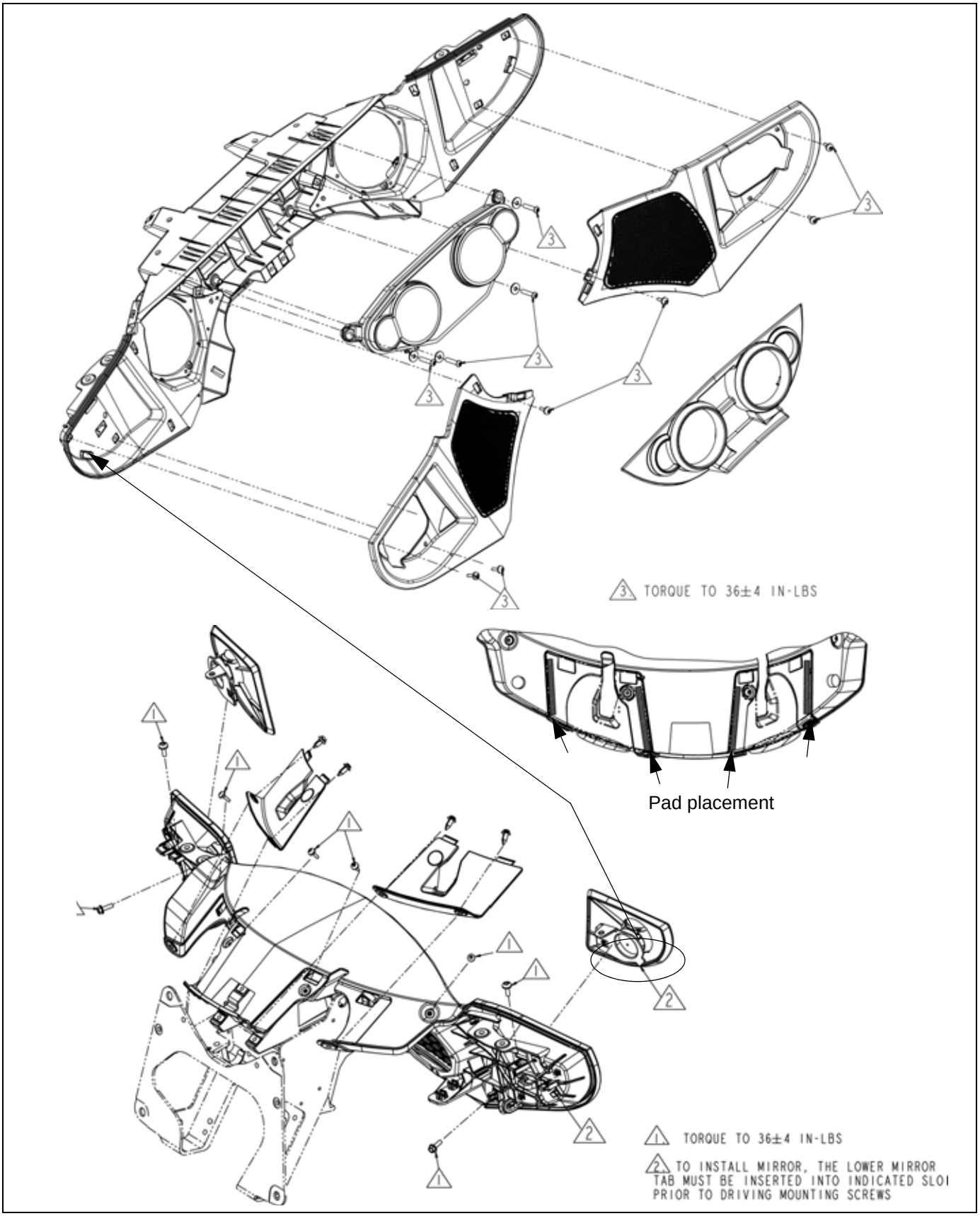

© 2009 Polaris Sales Inc.

FUEL TANK COVER

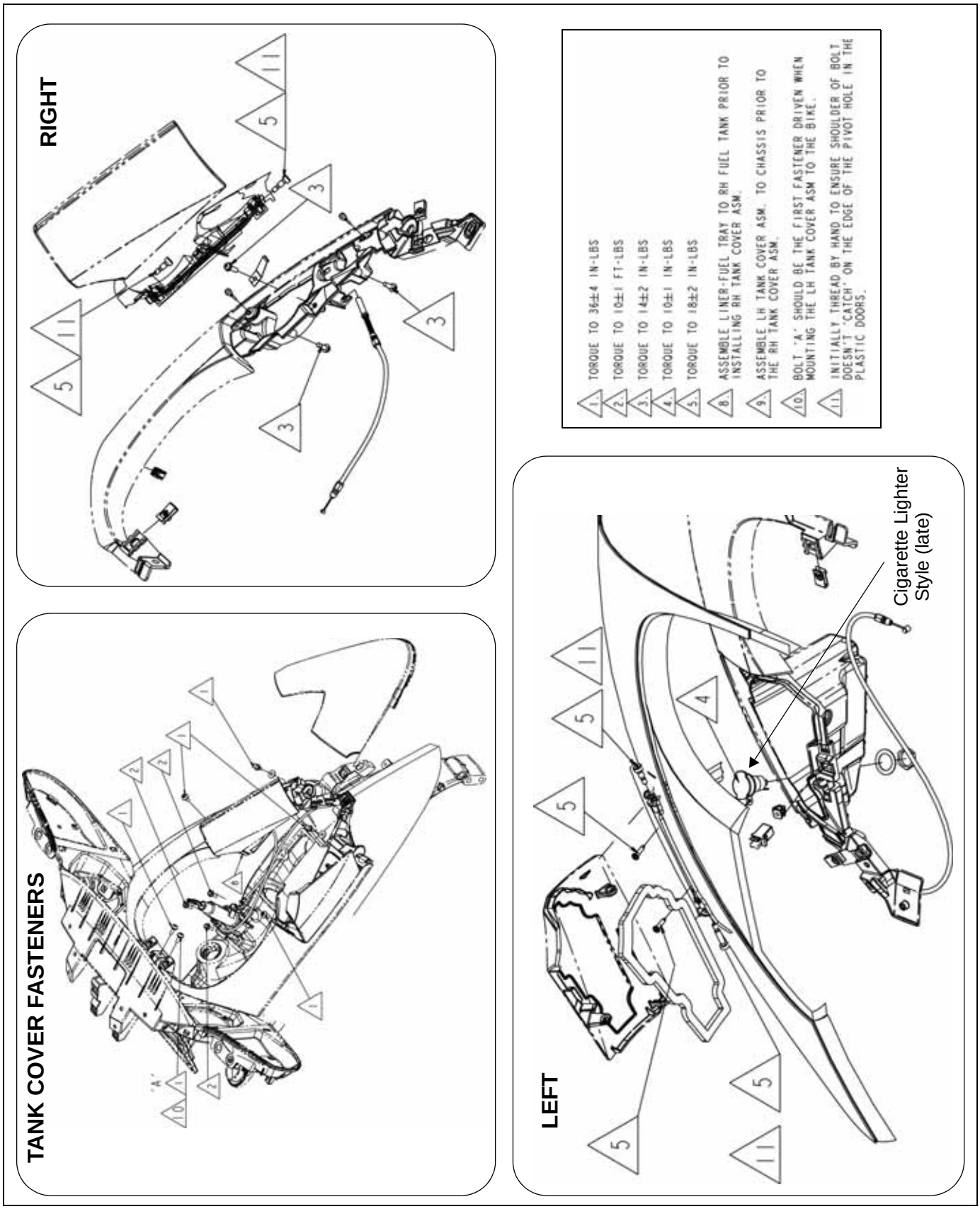

© 2009 Polaris Sales Inc.

LEG FAIRING

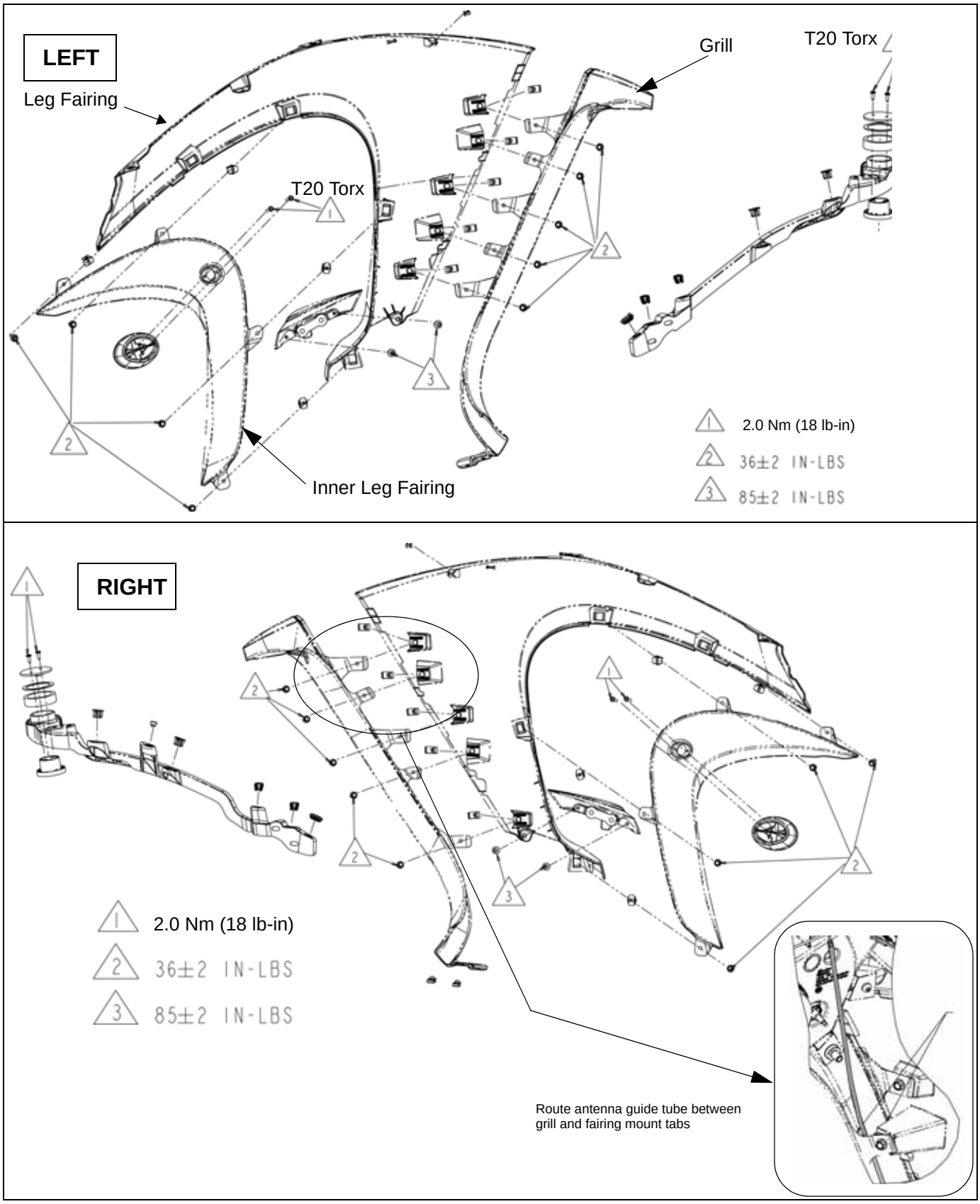

© 2009 Polaris Sales Inc.

LEG FAIRING SUPPORT

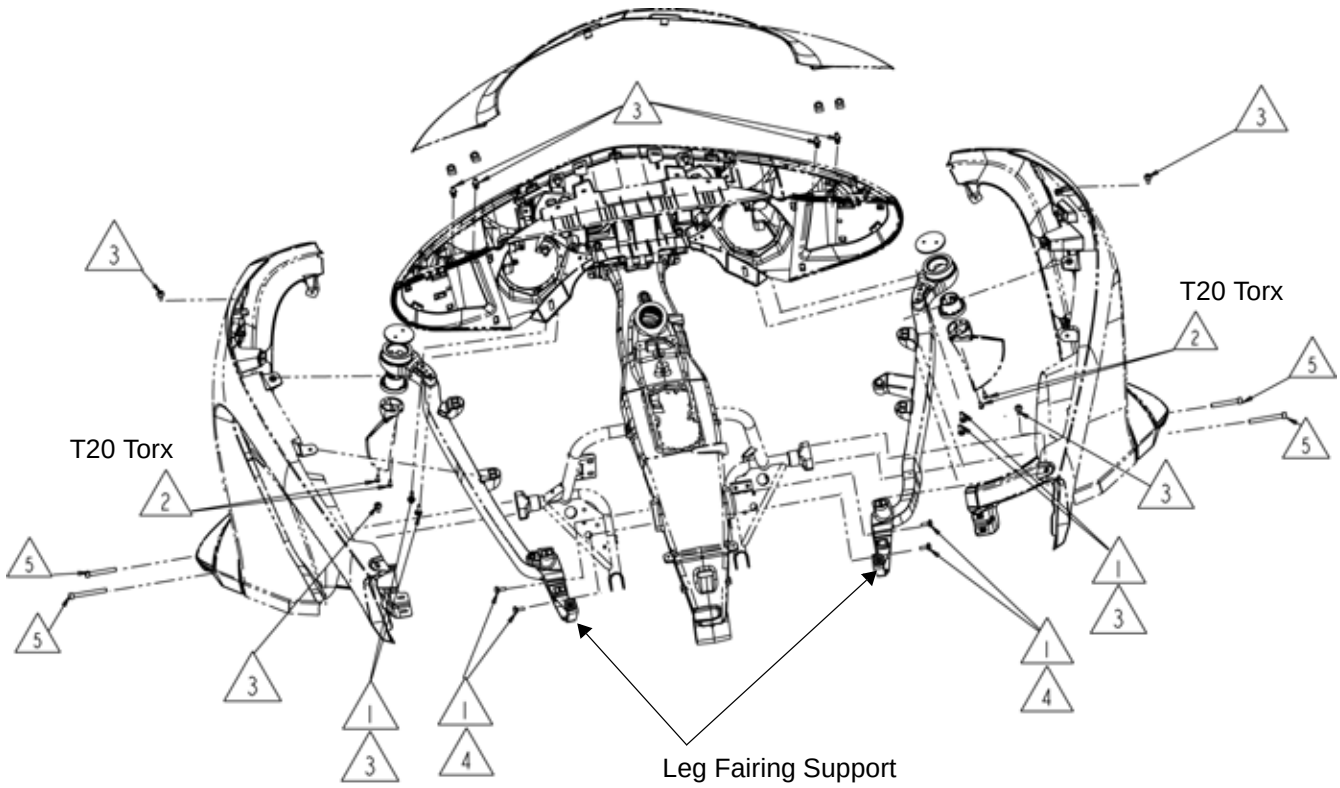

⚠ **Assembly Order:** Leg fairing support must be placed, fastened, and torqued to the main instrument panel before placing the rear bolts to the frame, or air deflectors may not align with mounts.

2. 2.0 Nm (18 lb-in)
3. 36±2 IN-LBS
4. 85±4 IN-LBS
5. 18±1 FT-LBS

© 2009 Polaris Sales Inc.

FRONT TURN SIGNAL HEADLAMP / FAIRING

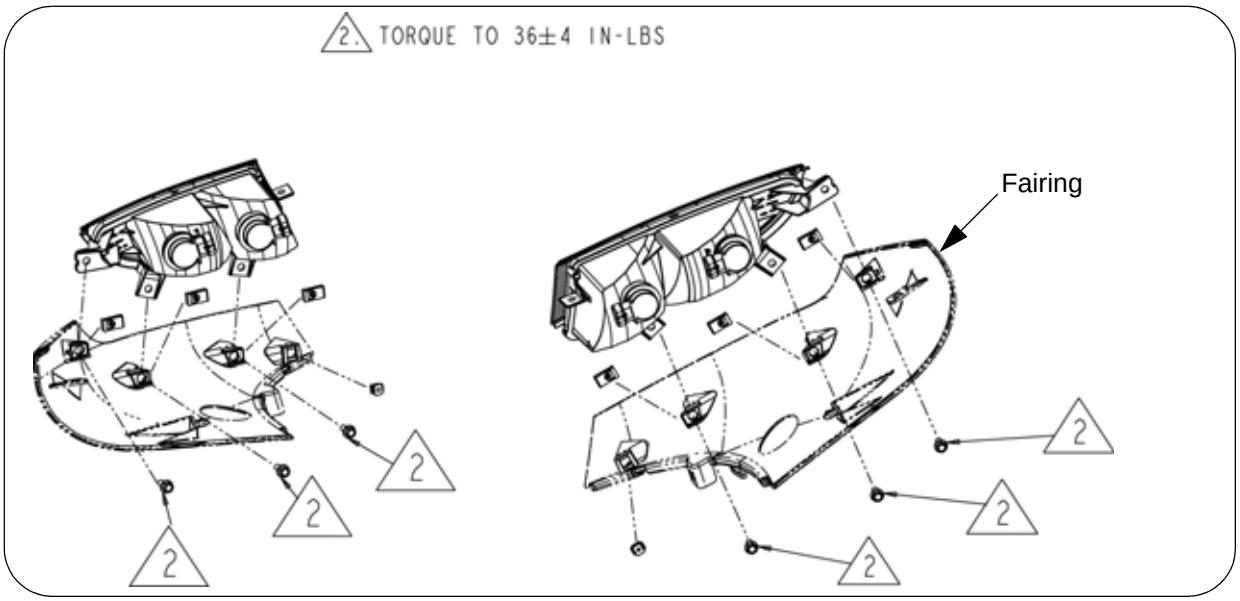

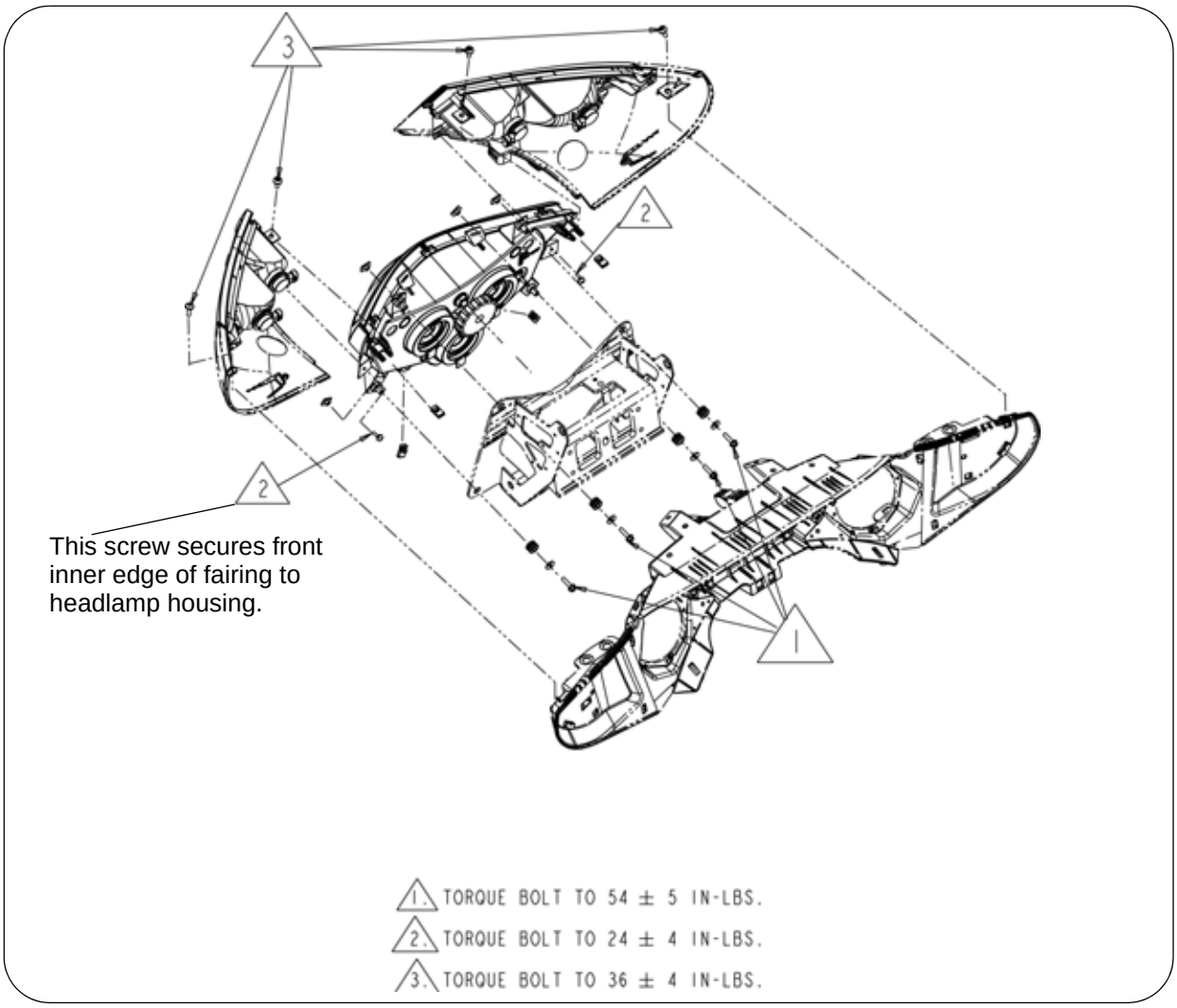

© 2009 Polaris Sales Inc.

LOWER FRONT FRAME

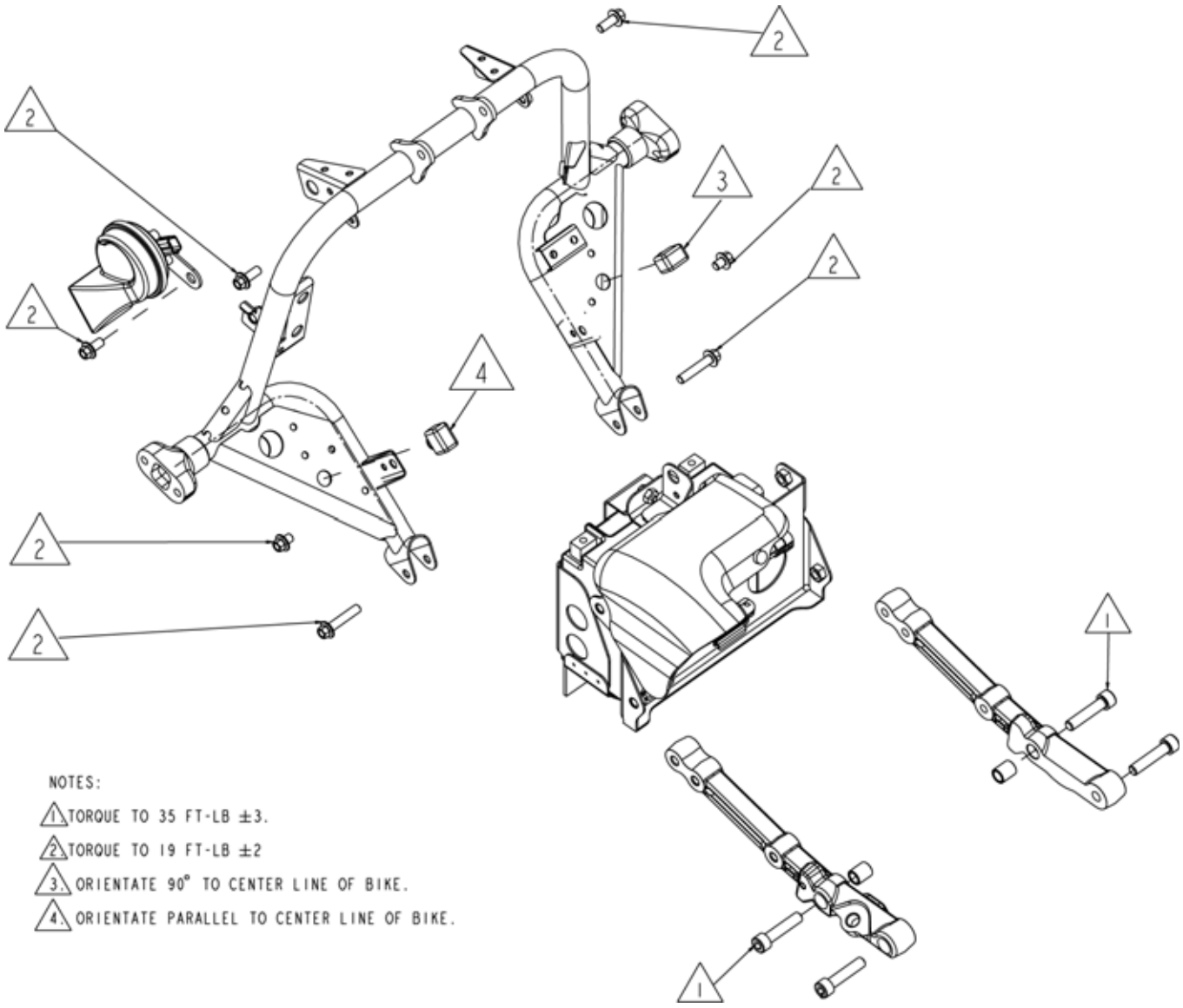

NOTES:

1. TORQUE TO 35 FT-LB ±3.
2. TORQUE TO 19 FT-LB ±2
3. ORIENTATE 90° TO CENTER LINE OF BIKE.
4. ORIENTATE PARALLEL TO CENTER LINE OF BIKE.

© 2009 Polaris Sales Inc.

BATTERY BOX

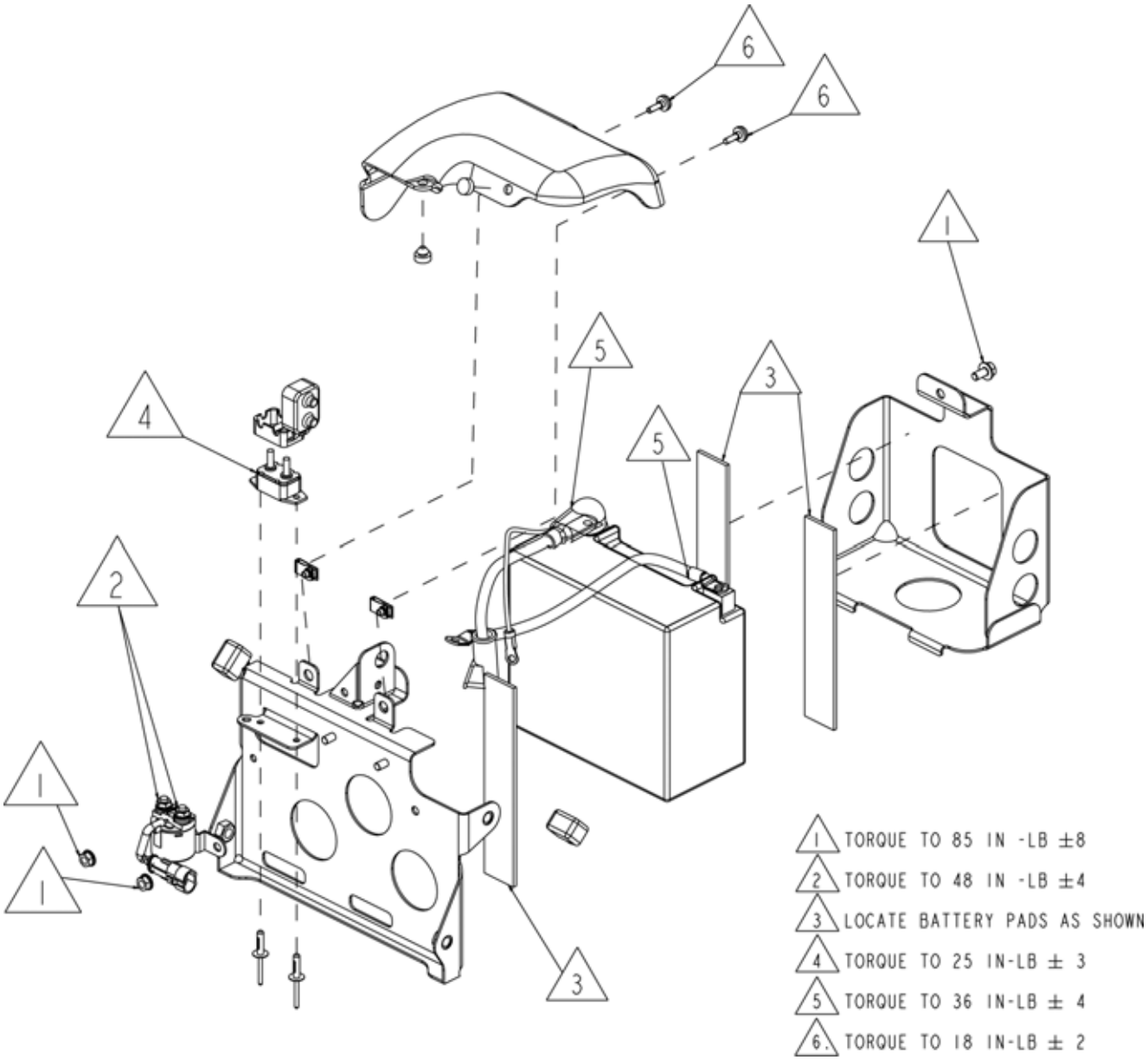

© 2009 Polaris Sales Inc.

REMOVAL / INSTALLATION PROCEDURES - REAR BODY

SEAT

Removal

WARNING

Always make sure the seat is securely fastened before riding the motorcycle. A loose seat could cause a sudden shift in riding position, causing you to lose control of the motorcycle.

1. Remove rear console cover (page 3.5).
2. Remove two seat bolts (A) (4mm hex) and washers below each screw.

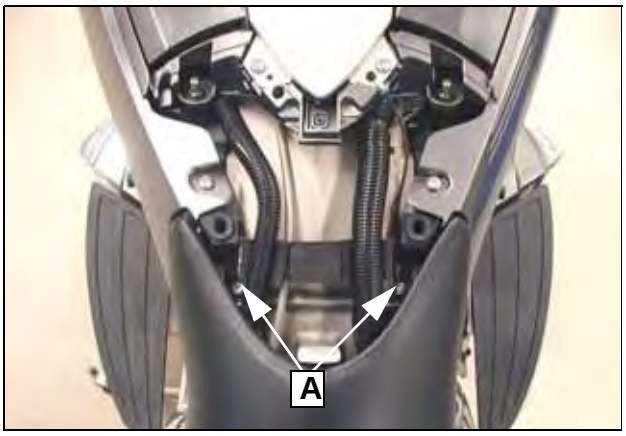

3. Lift front of seat upward and pull forward to disengage tab at rear of seat. Disconnect wire harness for heated seat (if equipped).

Installation

1. To install, reverse above process. Be sure rear tab of seat is engaged in slot.
2. Press and hold light inward pressure on front corners of seat to minimize finish gap while screws are tightened.
3. Torque seat bolts to 36 lb-in (4 Nm).

SIDE COVER

Removal

1. Remove seat (1).
2. Pull center of both darts out and remove (1).

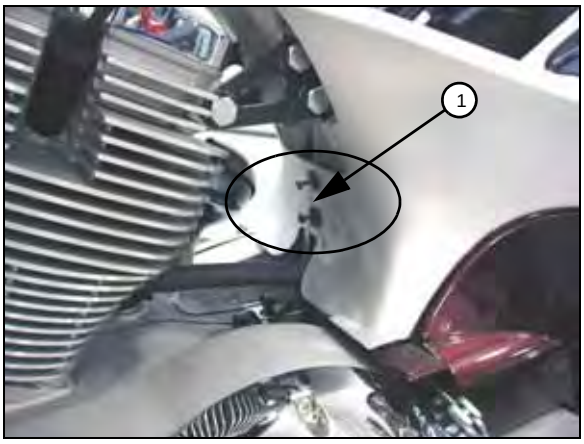

3. Open both saddlebag doors.
4. Pull cover out at rear corner (2) and top front (3) to release grommets from pins.
5. Support lower access panel and pull bottom edge of cover straight outward to release tab (4).

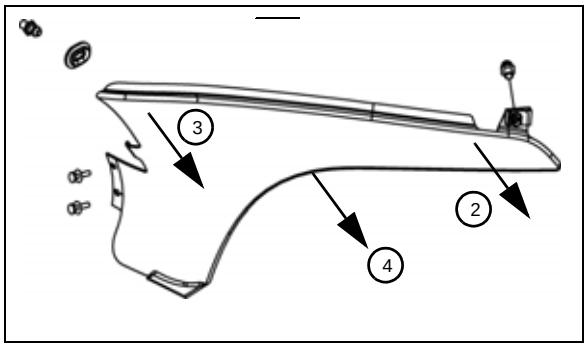

Installation

1. Install right side cover first. Lubricate rubber grommets with mild soap and water solution.
2. Engage tab in bottom center of cover with slot in lower access panel and align grommet at rear.
3. Push cover evenly inward until tab and grommet are secured.
4. Install left side cover with front edge covering front edge of right cover.
5. Align holes at front and install darts. Push center pin of each dart until seated.

© 2009 Polaris Sales Inc.

LOWER ACCESS PANELS (SADDLEBAG LOWER PANEL)

Removal

1. Remove seat (page 3.27).
2. Remove side covers (page 3.27).
3. Open saddlebag doors.
4. Remove (5) 4mm button head screws from access panel.

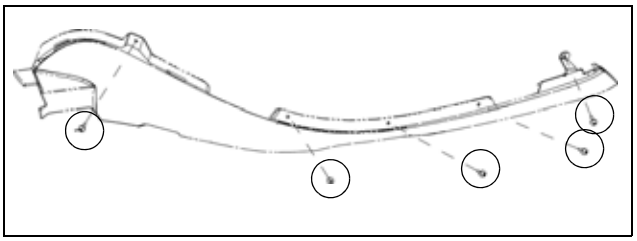

5. Lift rear of tail trim panel ("M" shaped panel) straight upward to disengage rear tabs.

Lift high enough to release peg that secures rear of lower access panel.

6. Pull straight outward at rear of access panel to disengage rear-most tab (A) and hold it clear of the peg on tail trim panel.
7. Press tail trim panel back down into place until secured in its original position (B).

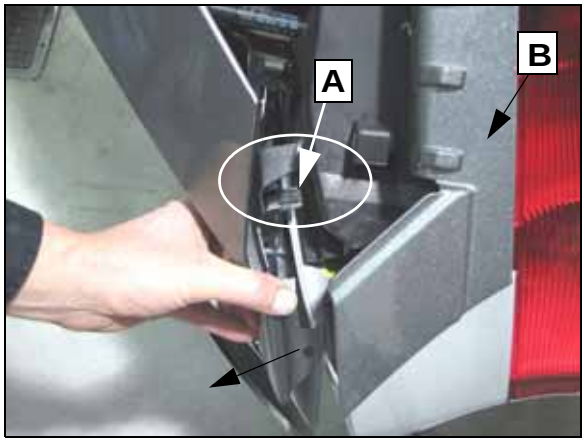

8. Close saddlebag door.

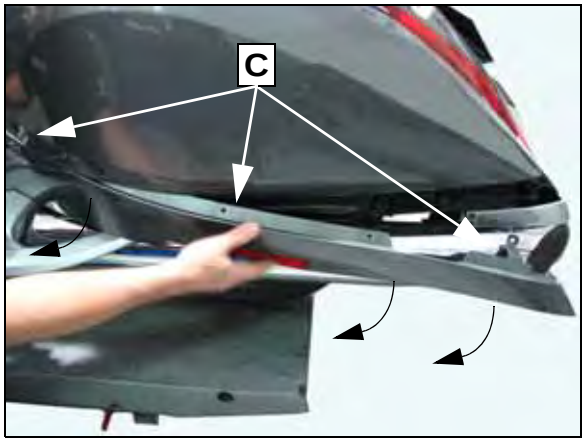

9. Starting at rear of access panel, carefully twist bottom edge of access panel outward (hold top edge in, toward the motorcycle while doing this).
10. Work forward, pulling panel out below saddlebag carefully and away from motorcycle to disengage (3) spring clips (C).
11. Repeat for other side.

Installation

1. Reverse removal steps to install panel(s). Install all fasteners lightly and fully seat spring clips before fully tightening any screws. Torque all screws to 4 Nm (36 lb-in).

© 2009 Polaris Sales Inc.

STREET TRIM PANEL REMOVAL

Victory Vision Street

1. Remove seat (page 3.27).
2. Remove license plate and plate bracket by removing two 4mm internal hex drive screws (1).

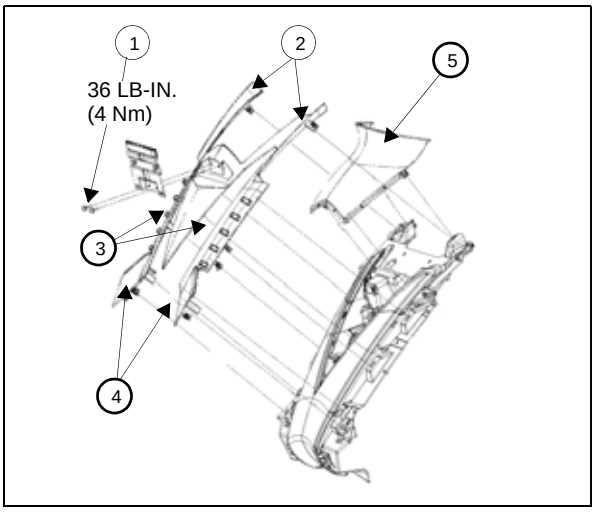

3. Lift edges of tail light trim (“M” panel) at indicated points in order (2), (3), then (4) to release tabs.

NOTE: Lift “M” panel enough to provide clearance to remove street trim panel. It is not necessary to completely remove the “M” panel.

4. Lift street trim panel (5) straight upward to release all four tabs.
5. Align tail trim and push it down firmly into place, reversing order of removal.
6. Install seat and license bracket.

STREET TRIM PANEL INSTALLATION

Victory Vision Street

1. Lift tail light trim (“M” panel) enough to provide clearance to install street trim panel.
2. Set street trim panel in place and align tabs with slots.
3. Push straight down evenly until all four tabs are secured in slots.
4. Press each tab of “M” panel in reverse order of removal until tabs are secured.
5. Install seat (page 3.27) and license bracket.

LICENSE PLATE BRACKET (EUROPE)

See page 3.37.

© 2009 Polaris Sales Inc.

TRUNK REMOVAL

Victory Vision Tour

1. Remove seat (page 3.27).
2. Locate and disconnect trunk wire harness (1) and any accessory wiring.

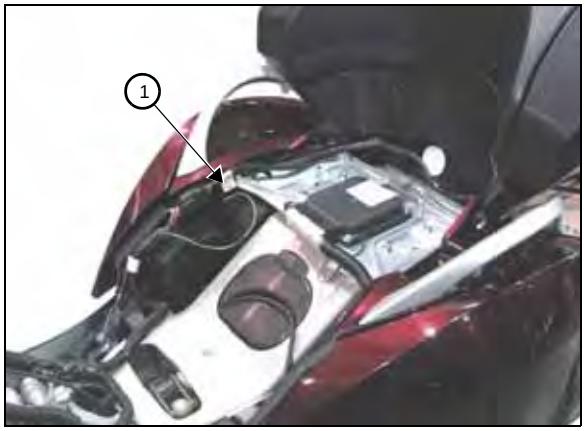

3. Remove license plate and then remove plate bracket by removing two button head screws (2) (4mm internal hex).

4. Open trunk and remove all contents.
5. Remove compartment cover by squeezing between notches (3) and lift cover away.

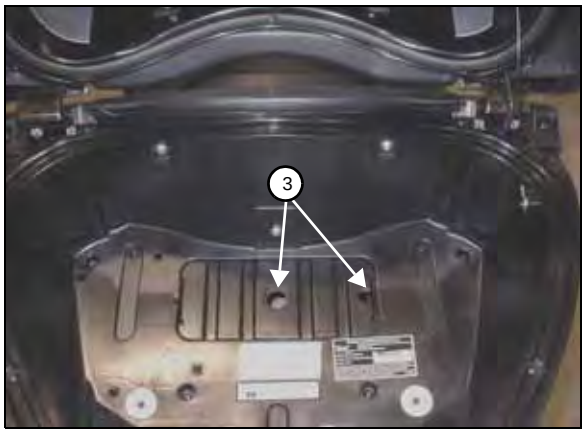

6. Remove three of four trunk mount bolts (4) with a 13 mm socket, leaving front right bolt for last.

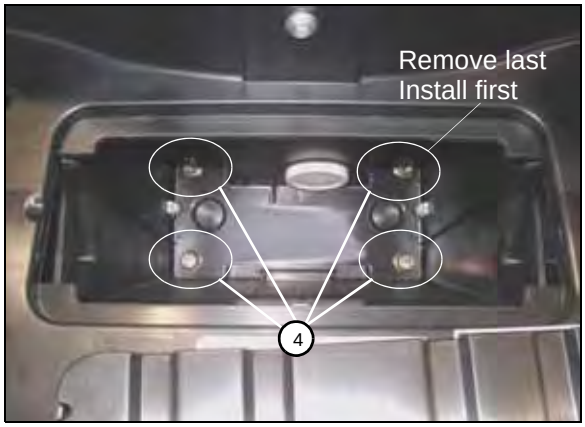

7. Support trunk and remove front right bolt.

TRUNK INSTALLATION

Trunk Installation Notes: Reverse steps above.

Install new foam pads.

Torque trunk mounting bolts to 26 lb-ft. (35 Nm)

Torque license plate bracket screws to 36 lb-in. (4 Nm).

© 2009 Polaris Sales Inc.

TAIL LIGHT TRIM (“M”) PANEL

Removal

1. Remove license plate to access bracket screws. Remove bracket screws and bracket.
2. Starting at lower edge of “M” panel, lift straight away to disengage spring tabs along each edge.
3. Lift center of “M” panel to disengage center tabs near license plate mount.
4. Pull top corners up to disengage top tabs on each side.

NOTE: On Victory Vision Tour models (equipped with a trunk), the “M” panel must be moved rearward before front of panel can be raised high enough to clear the trunk and release the tabs from slots (see Step 5).

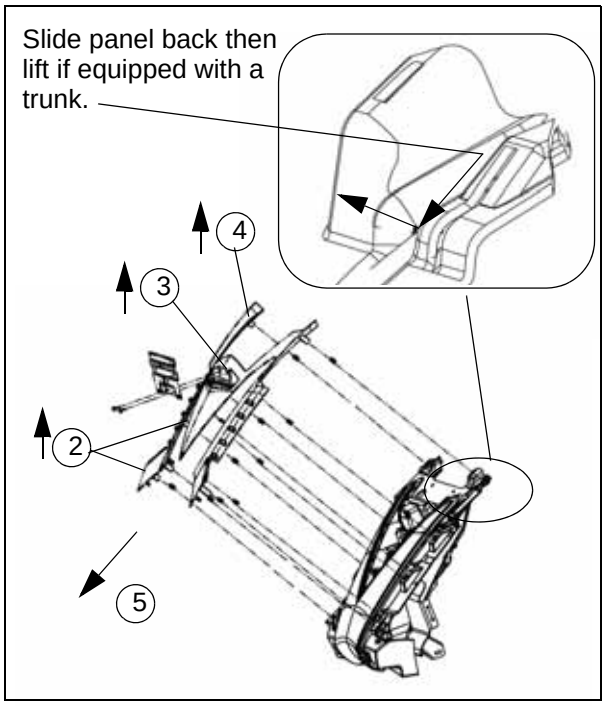

5. Slide “M” panel rearward to move top tabs down in the elongated top slot until panel is clear of trunk.
6. Lift front tabs out of slots and remove panel.

Installation

1. Be sure all spring clips are in place on “M” panel tab posts.
2. Trunk Equipped Models: Engage front tabs on panel with top slots on tail lamp housing and carefully slide “M” panel forward, keeping it clear of trunk.
3. Align all “M” panel tabs with their respective mounting slots and push straight down into place, starting at top and moving downward until all are firmly seated. Be sure peg at bottom of panel is aligned with hole in each lower access panel.

REAR BUMPER COVER

Removal

1. Open saddlebag doors.
2. Remove “M” panel (page 3.31) or lift lower legs of “M” panel up to access the two screws on the top inside edge (A).
3. Remove (6) button head screws from cover. Protect chrome exhaust shield when removing outer screws (B) on left and right side.

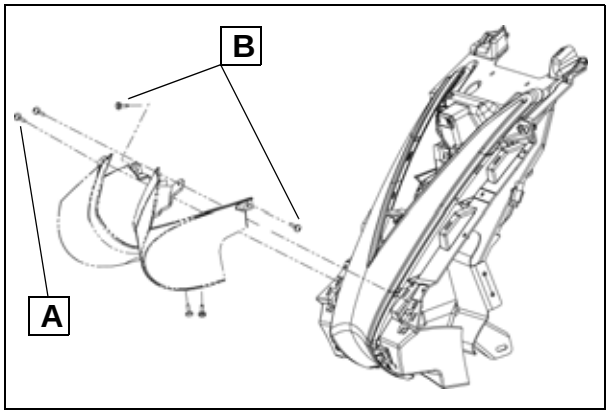

Installation

1. Align screw holes and install all screws until lightly seated.
2. Torque to 4.0 Nm (36 lb-in).

© 2009 Polaris Sales Inc.

TAIL LIGHT

Removal

1. Remove “M” panel (page 3.31).
2. Remove rear bumper cover (page 3.31).
3. Remove five tail lamp lens screws (A).
4. Pull tail lamps rearward to remove.

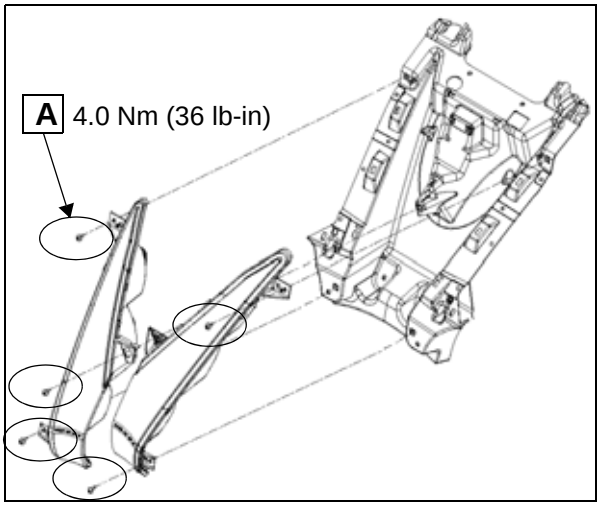

Installation

1. Left tail lamp overlaps the right.
2. Install all screws lightly to align lenses, then fully tighten.
3. Install parts removed for access.

TAIL LIGHT HOUSING

Removal

1. Remove trunk (if equipped - page 3.30) or street trim panel (page 3.29).
2. Remove tail lights (page 3.32).
3. Remove lower access panels (page 3.28).
4. Remove ten (10mm hex head) screws (B).
5. Remove two (13mm hex head) screws (C) at top of panel.

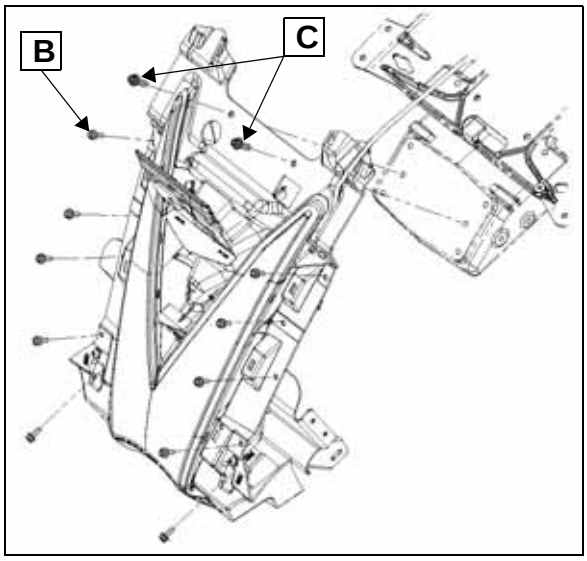

Installation

1. Reverse removal steps to install.
2. Torque fasteners to 4.0 Nm (36 lb-in).

© 2009 Polaris Sales Inc.

SADDLEBAG DOOR

Removal

1. Open saddlebag door.
2. Remove six screws that fasten two upper hinge plates to door. Door strut can remain attached to rear upper hinge plate.

Installation

1. Install hinge screws and torque to 4.0 Nm (36 lb-in).

SADDLEBAG (INNER BAG)

Removal
(Instructions below are for left saddlebag. Right bag removal similar).

Refer to illustration on page 3.40 for fastener location and torque values.

1. Remove saddlebag door (page 3.33).
2. Remove lower access panels (page 3.28).
3. Remove tail light trim (“M”) panel (page 3.31).
4. Remove rear bumper cover (page 3.31).
5. Remove two nuts, washers, and outer grommets for the muffler (page 3.45).
6. Remove two door latch bracket screws and bracket with latch and cable attached (10mm socket) and set bracket / latch assembly aside.
7. Remove diagnostic connector from clip. Pull grommet through inner bag.
8. Remove rear shock air fitting.
9. Remove three screws along the rear edge of inner saddlebag that fasten the bag to the tail light housing.
10. Remove two screws at rear lower corner of bag that fasten bag to rear bumper (10mm socket).
11. Remove three bolts that fasten bag to frame and rear tip over support (13mm socket). Leave one bolt loosely installed to support the bag.
12. Remove single bolt inside saddlebag (13mm socket).
13. Remove two top bolts that fasten bag to rear passenger hand grip mounting plate.
14. Support bag and remove the bolt from Step 10. Slide bag outward to remove.

Installation

1. Align muffler grommets horizontally to match slot in inner bag.
2. Reverse removal steps to install.

Refer to page 3.40 for fastener torques.

© 2009 Polaris Sales Inc.

SADDLEBAG SUPPORT PLATE (PASSENGER HAND GRIP AND TRIM)

Removal

NOTE: Passenger hand grips and trim cover cannot be removed with saddlebag support fully installed. The support plate must be lifted off frame high enough to access fasteners.

NOTE: Only one saddlebag must be loosened and moved slightly outward to remove support plate.

1. Remove seat (page 3.27).
2. Remove lower access panels (page 3.44).
3. Remove trunk or street panel as equipped.
4. Remove ECM ground wire screw. **Note washer placed under ECM for installation**.
5. Slide ECM connector lock lever toward right side of motorcycle until connector is disengaged from ECM. Pull connector straight outward.
6. Open both saddlebag doors.
7. Remove two saddlebag door latch bracket screws (A) and bracket with latch and cable attached (10mm socket). Set bracket aside (remove both left and right).
8. Remove two mount plate bolts (B) from each side.
9. Remove tail lights (page 3.32) and separate harness from darts on right side of plate. Set harness and lights in the seat area so support plate can be removed.
10. Loosen two front bolts (C) and bolt inside bag (D) about 5 turns. (Remove these from one bag only).
11. Remove four plate mounting bolts (E).
12. Pull top of loose bag outward slightly until outer tab on plate clears slot in bag. Lift plate up and slide sideways to disengage opposite tab and remove.

Installation

1. Reverse removal steps to install. Be sure bumpers are in place.

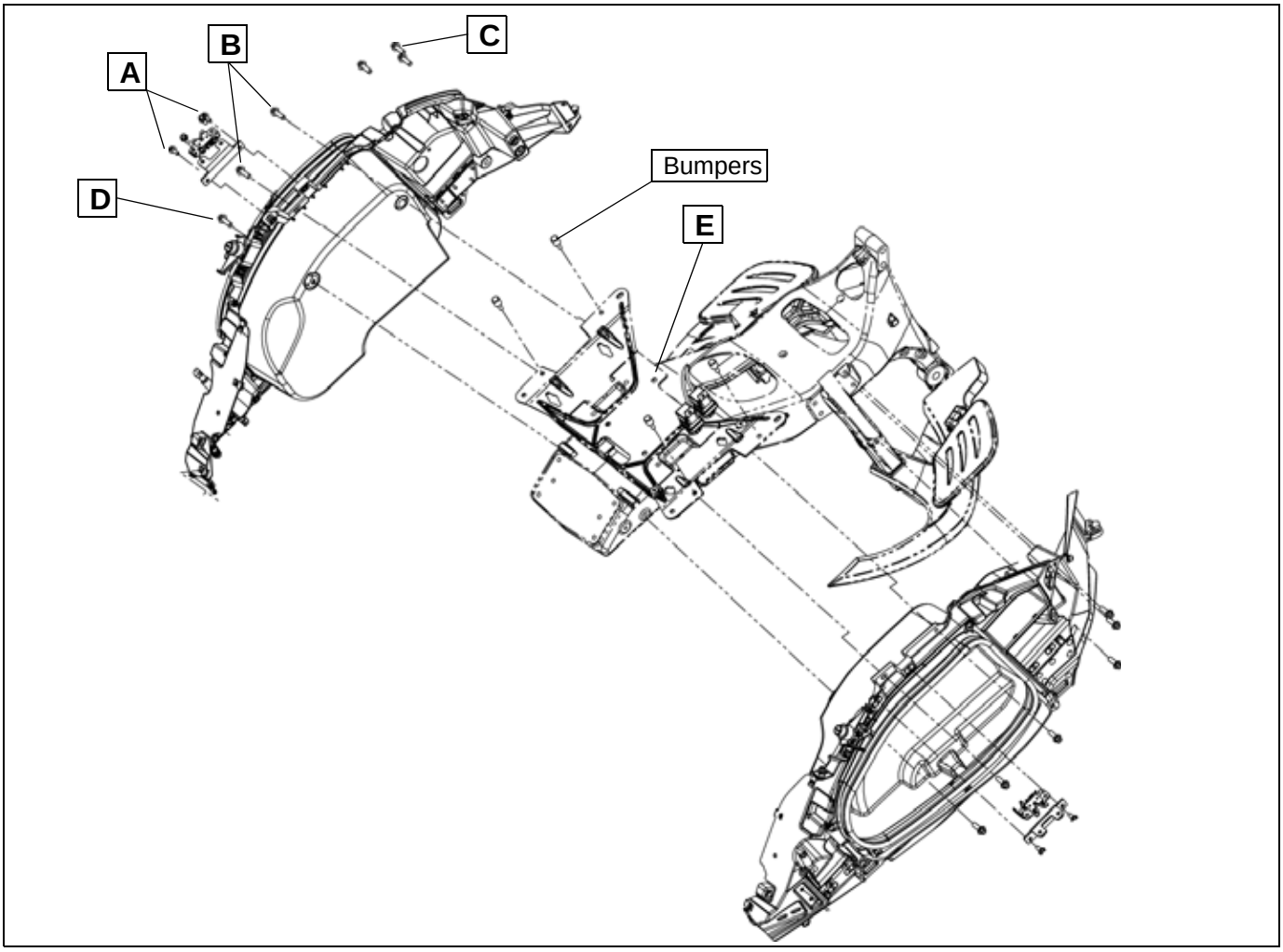

© 2009 Polaris Sales Inc.

ASSEMBLY VIEWS - REAR BODY

TAIL TRIM “M” PANEL

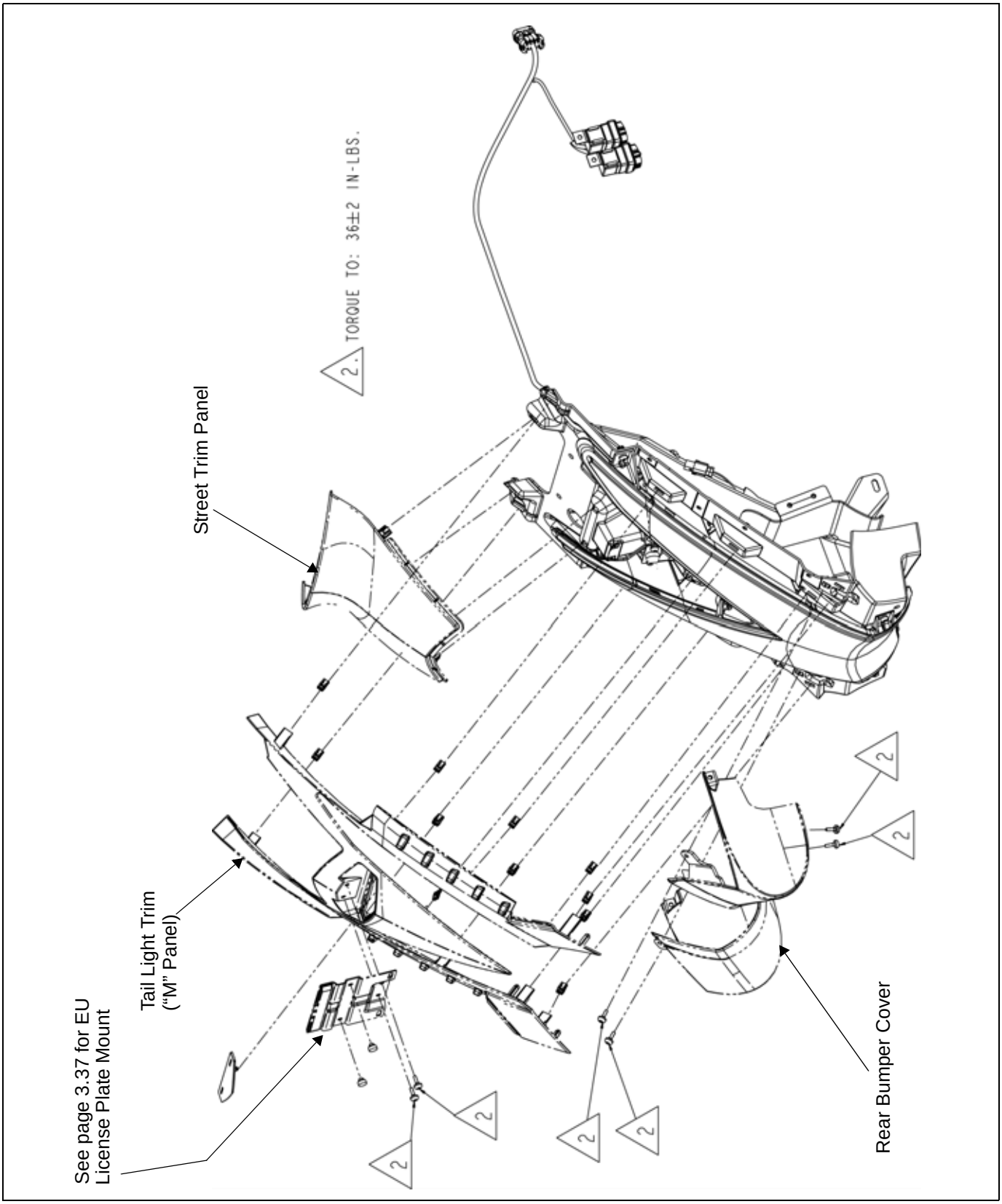

© 2009 Polaris Sales Inc.

TRUNK MOUNT AND ATTACHMENTS

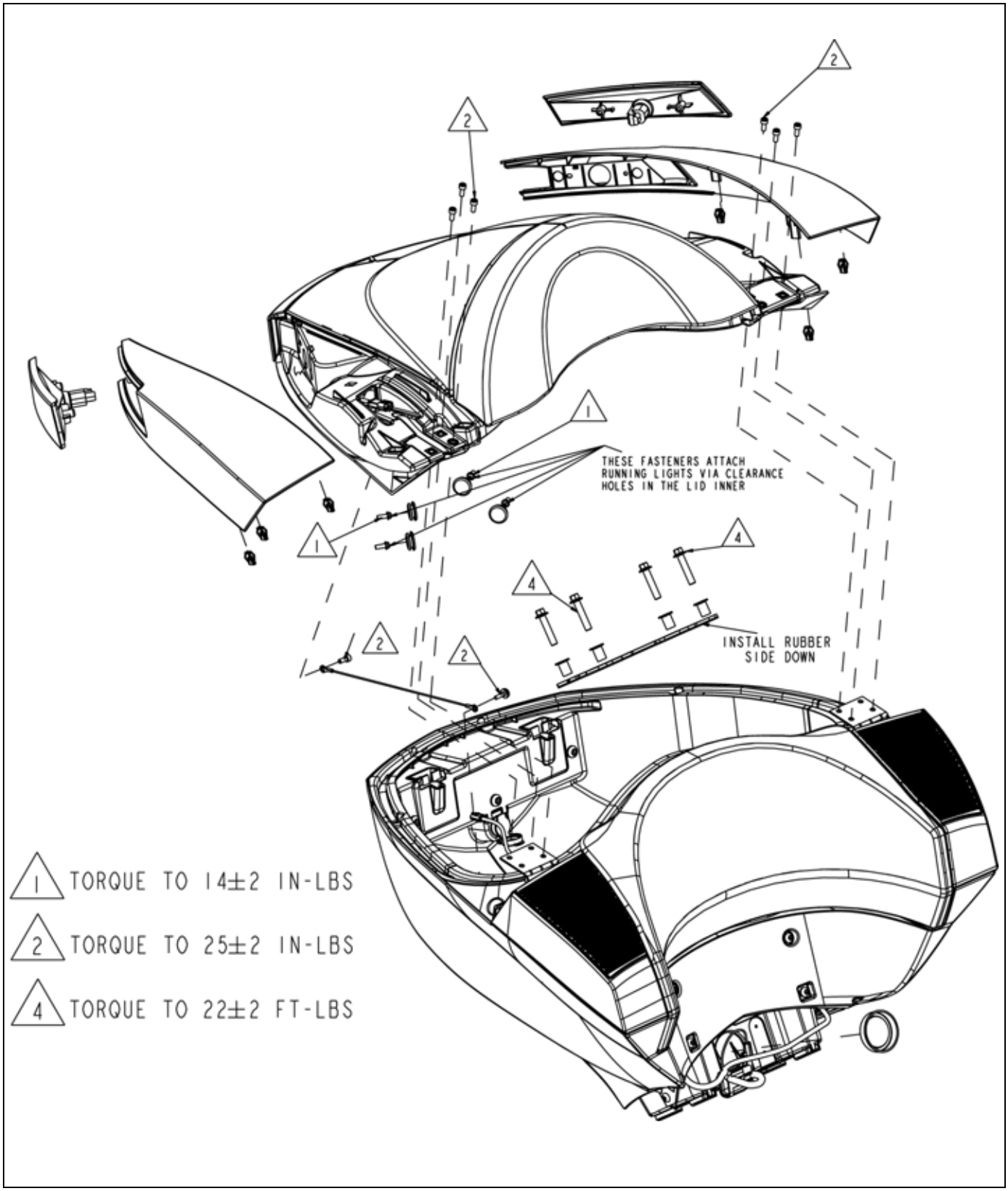

© 2009 Polaris Sales Inc.

LICENSE PLATE MODULE (EUROPE)

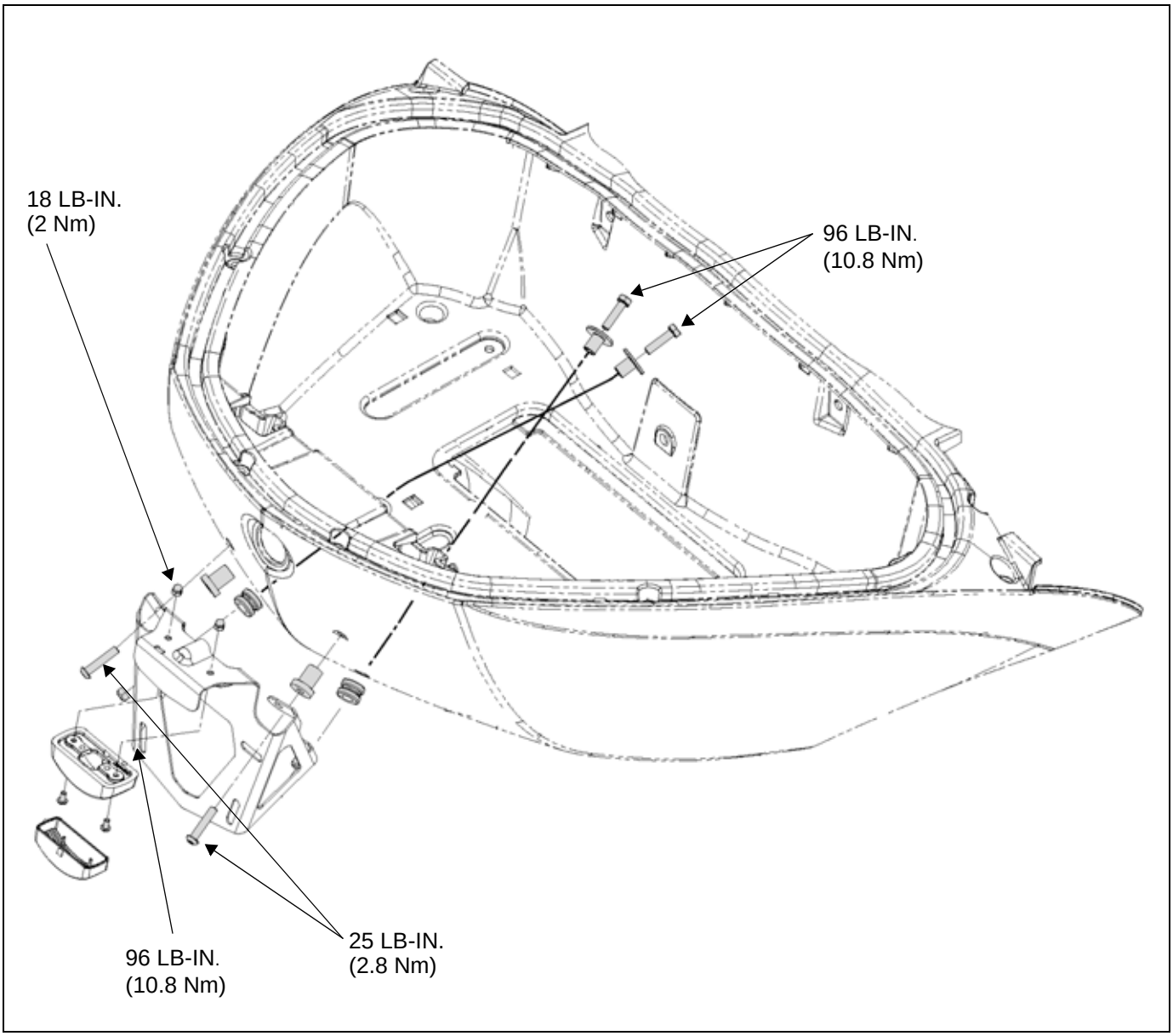

© 2009 Polaris Sales Inc.

TRUNK BASE

Some parts shown for reference only

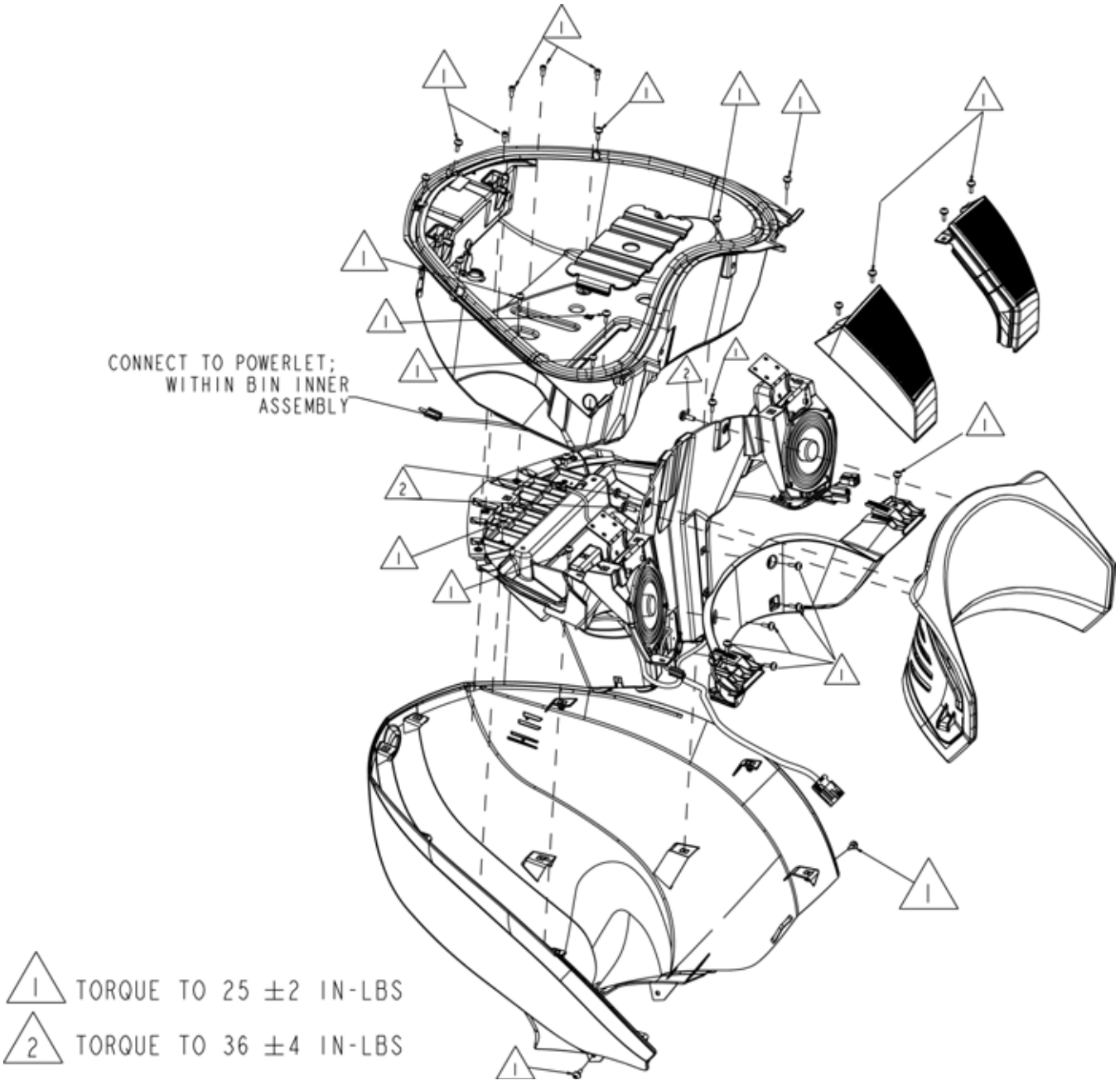

© 2009 Polaris Sales Inc.

TRUNK LID

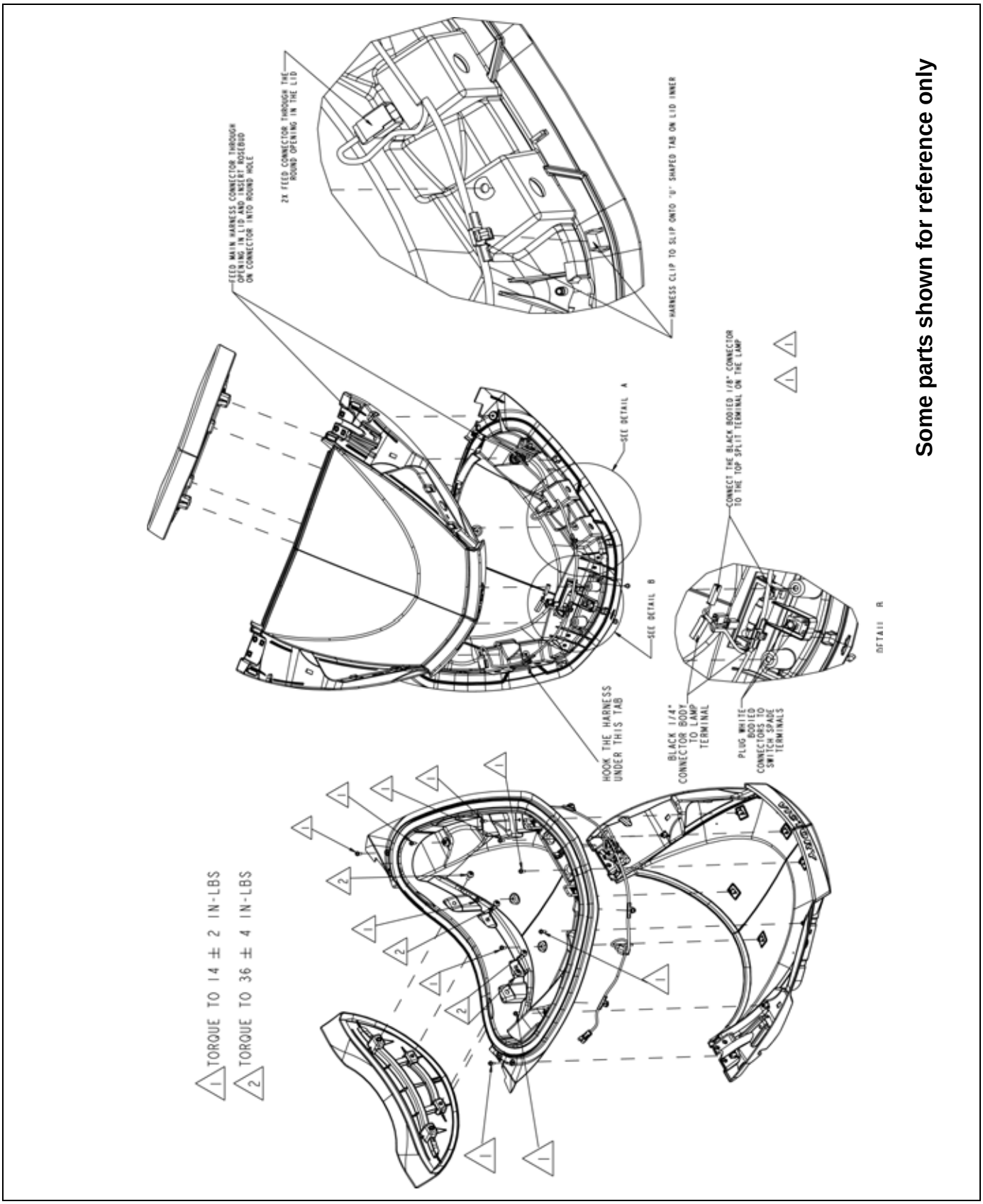

Some parts shown for reference only

© 2009 Polaris Sales Inc.

SADDLEBAG INNER

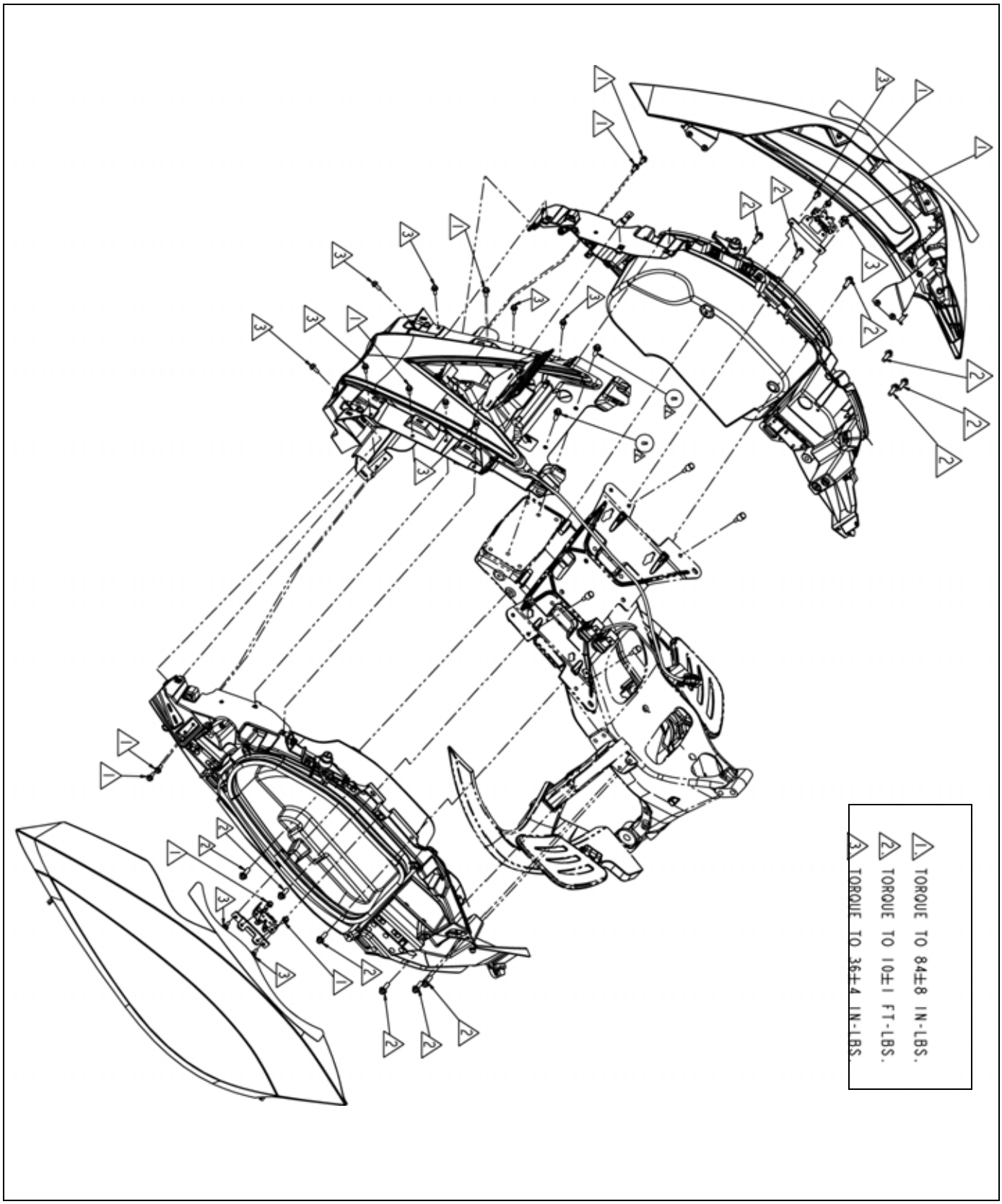

© 2009 Polaris Sales Inc.

TAIL LIGHT / TAIL LIGHT HOUSING

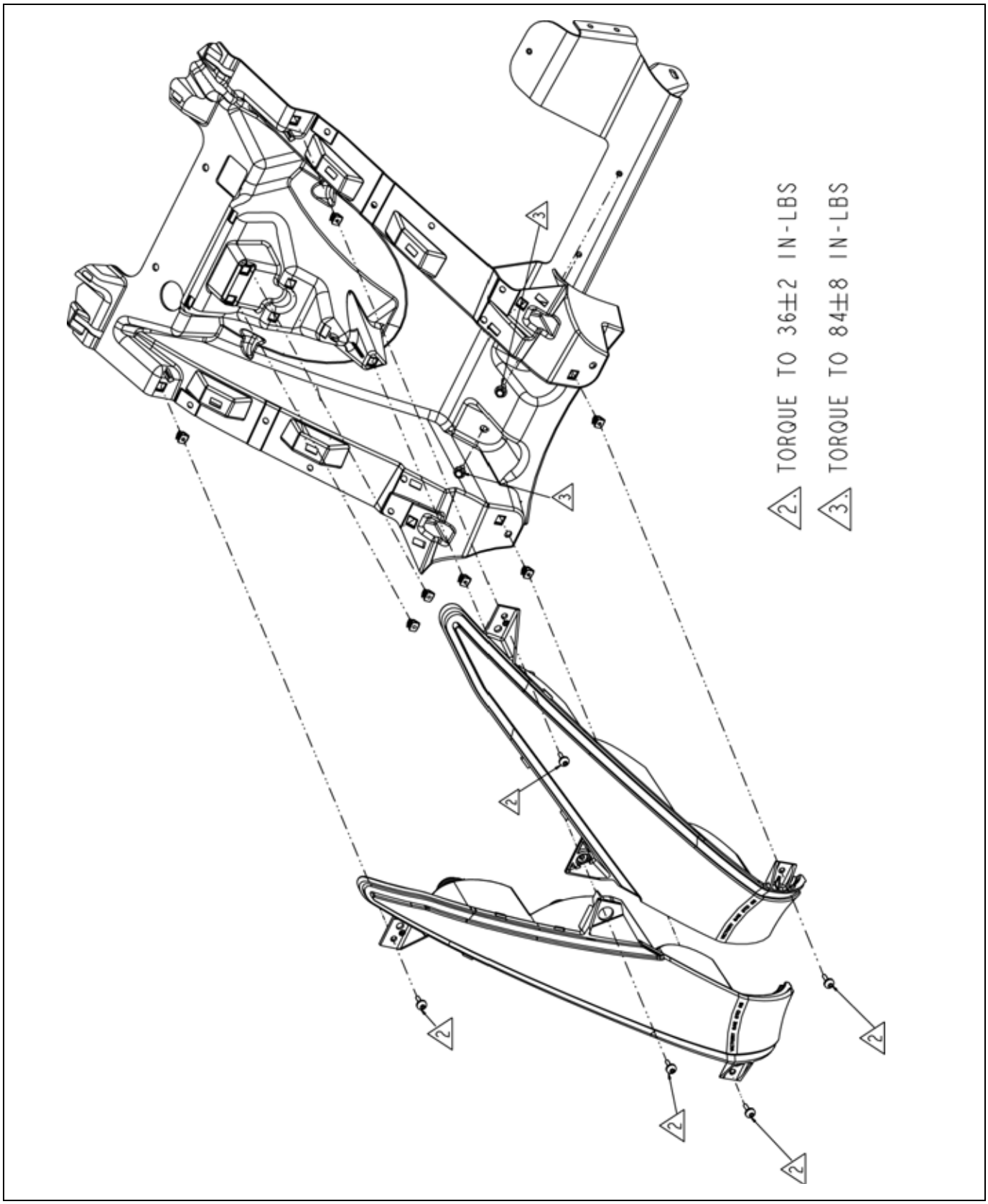

© 2009 Polaris Sales Inc.

FLOORBOARD / FOOT CONTROL MOUNTING

LEFT SIDE (SHIFT)

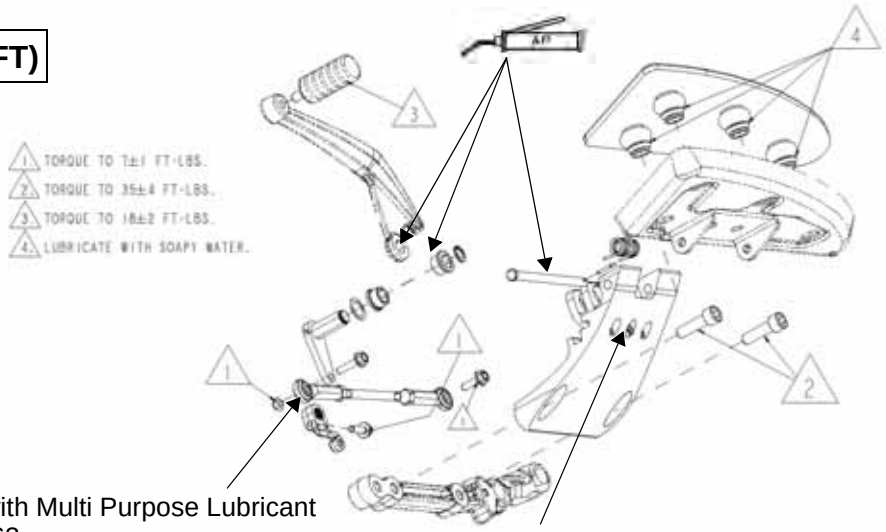

Lubricate with Multi Purpose Lubricant
P/N 2872863

96 lb-in (10.8 Nm)

Pedal position adjustment:

1) Remove screw
2) Move pedal assembly forward or rearward until screw hole aligns with on of the other two threaded holes.
3) Install screw and torque to specification.
4) Adjust shift pedal height as follows:
5) Hold linkage rod end (A) with a 7/16 wrench and loosen jam nut (B) with a 1/2 inch wrench.
6) Rotate linkage rod to set pedal height within specification.
7) Hold linkage rods and tighten jam nuts securely.

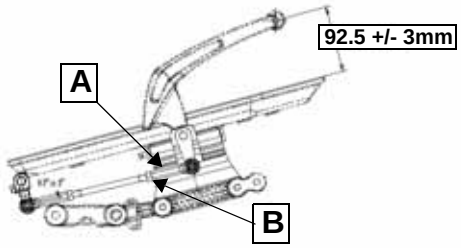

RIGHT SIDE (BRAKE)

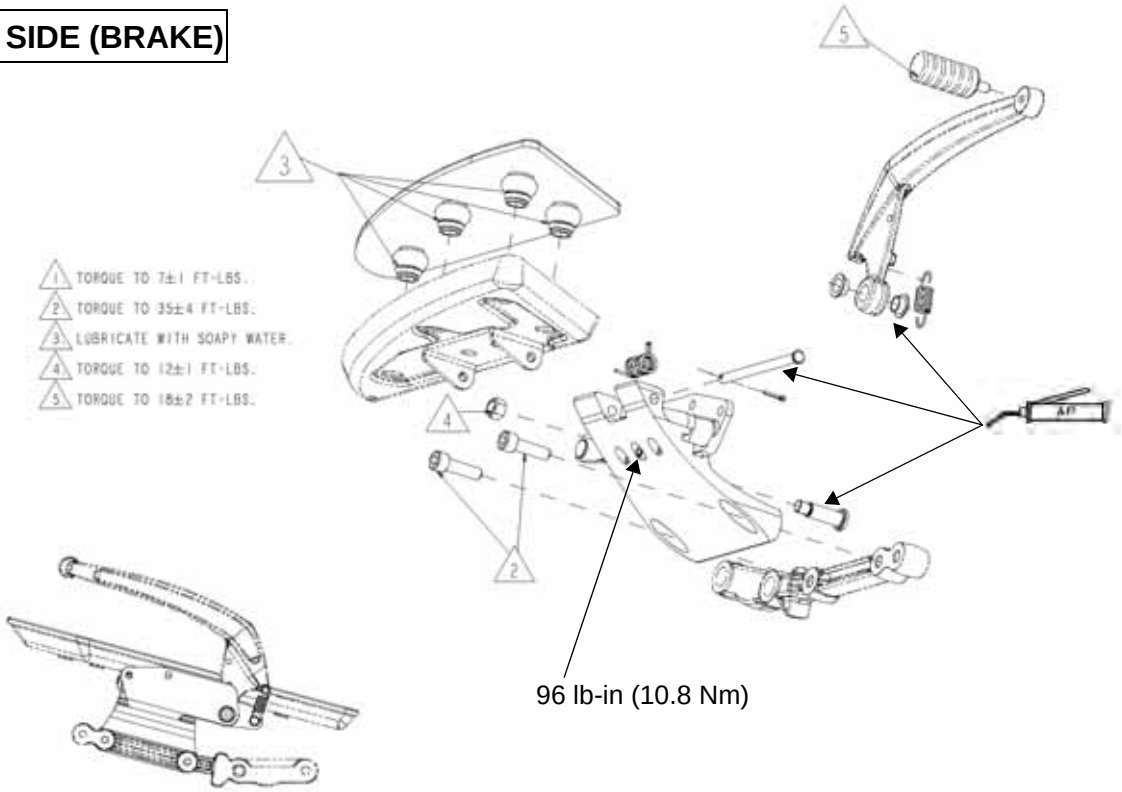

96 lb-in (10.8 Nm)

© 2009 Polaris Sales Inc.

PASSENGER FLOORBOARD MOUNTING

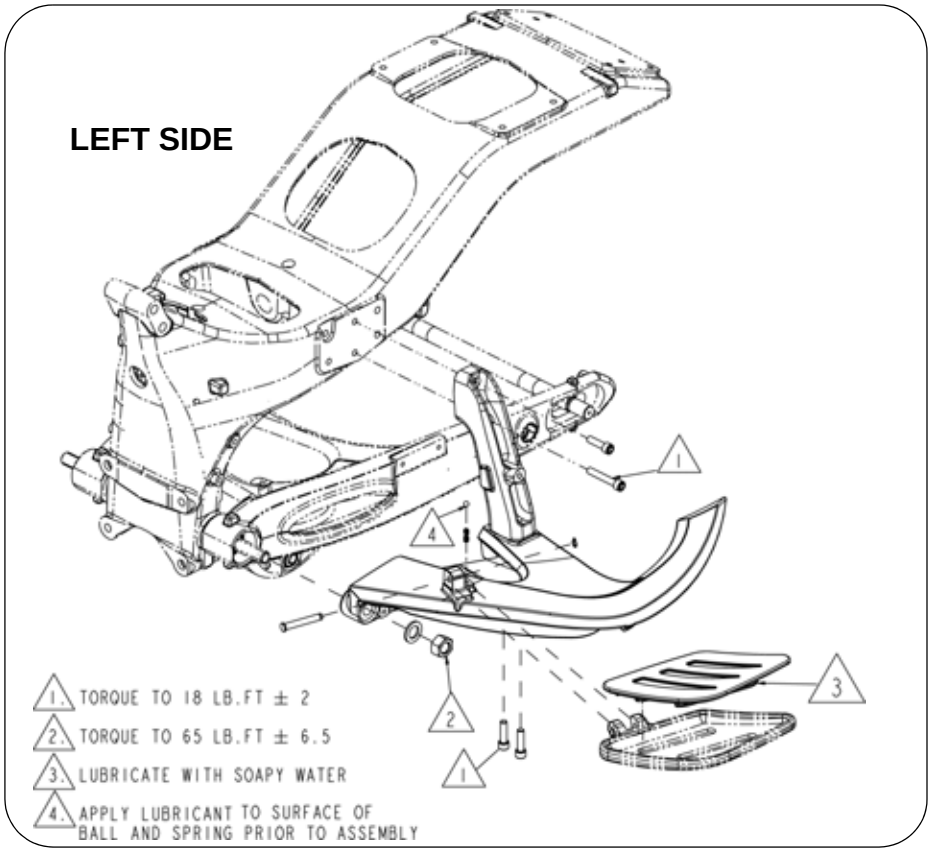

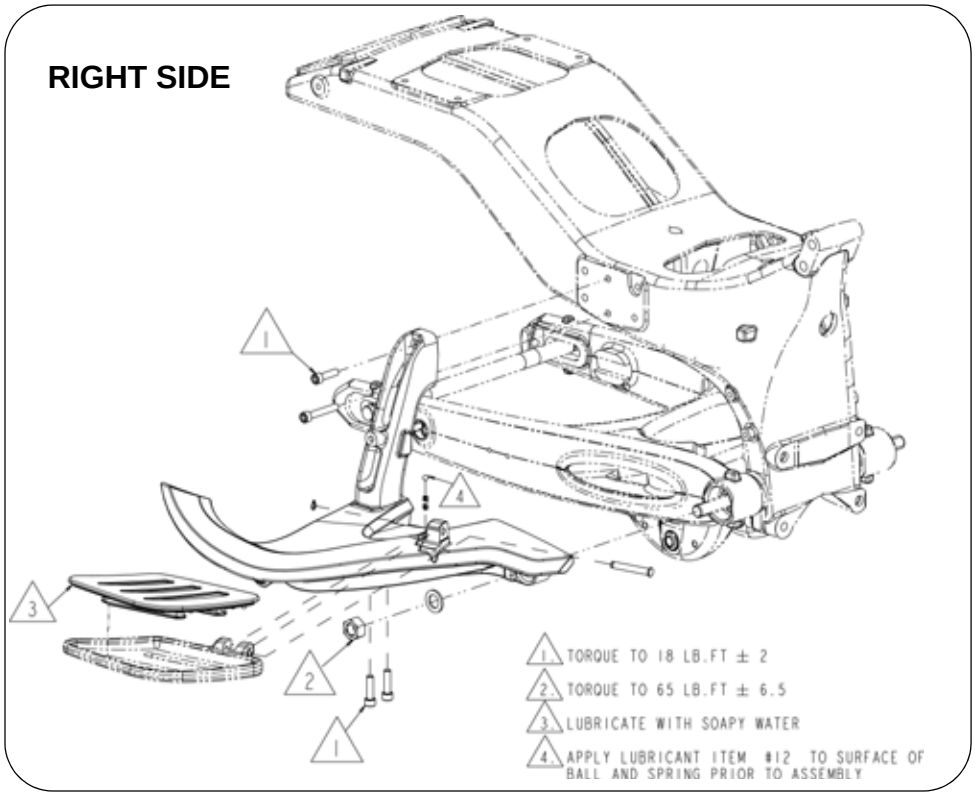

© 2009 Polaris Sales Inc.

LOWER ACCESS PANEL / PASSENGER HAND GRIP / SIDE COVER

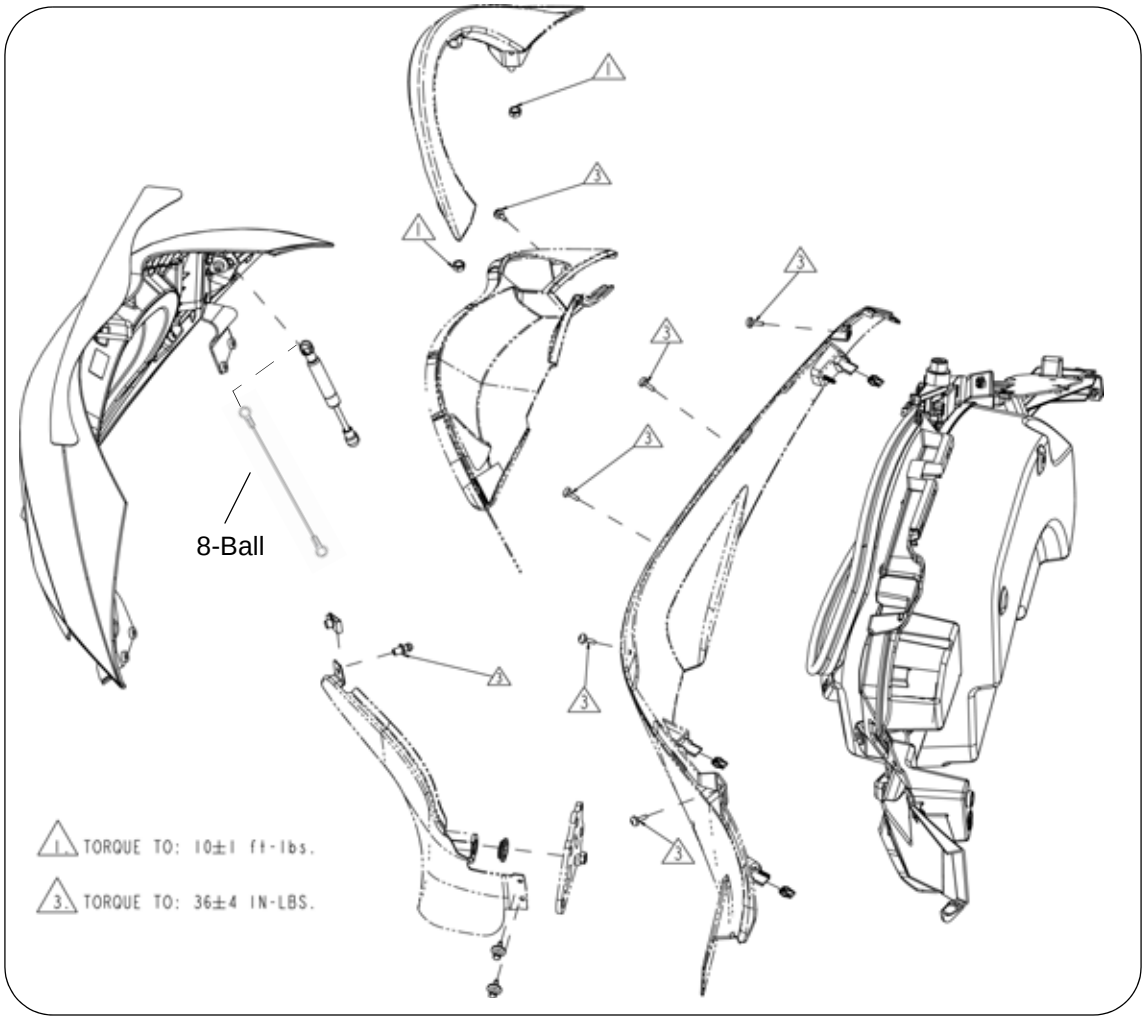

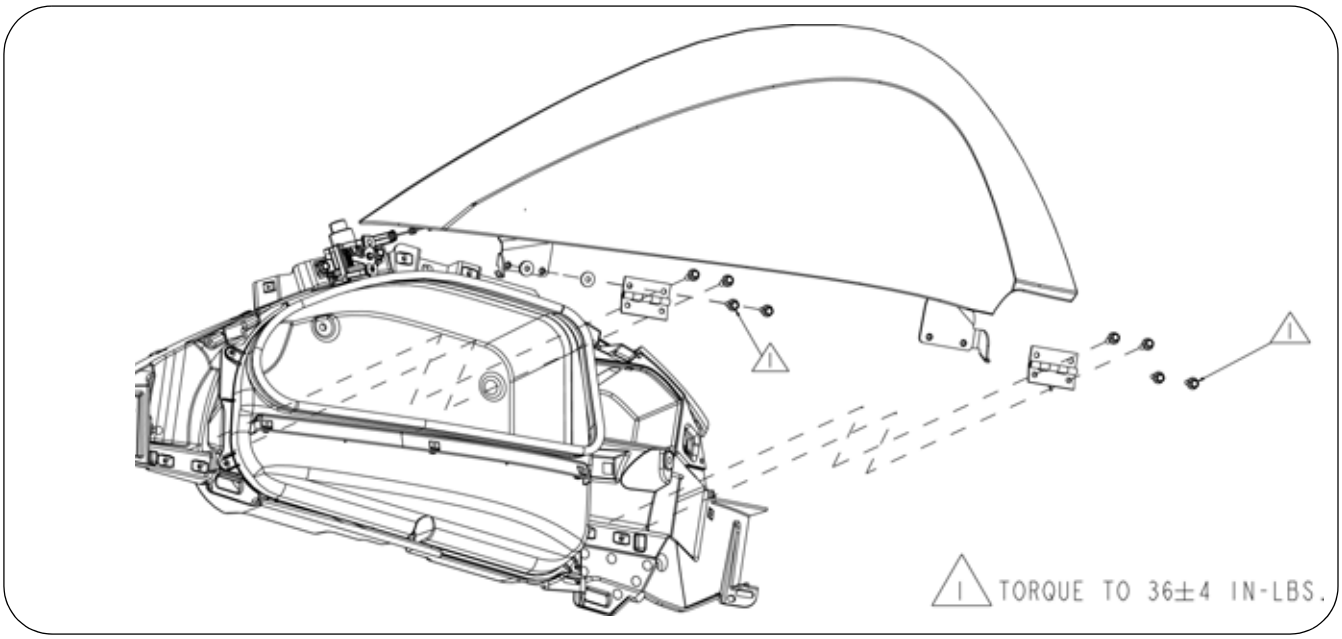

© 2009 Polaris Sales Inc.

EXHAUST SYSTEM

REMOVAL:

1. Use tool PV-49955. See removal procedure.

INSTALLATION:

1. Loosely assemble all parts (except shields A and B)
2. Tighten fasteners in order A - H
3. Remove all oil, grease, or lubricant before starting engine

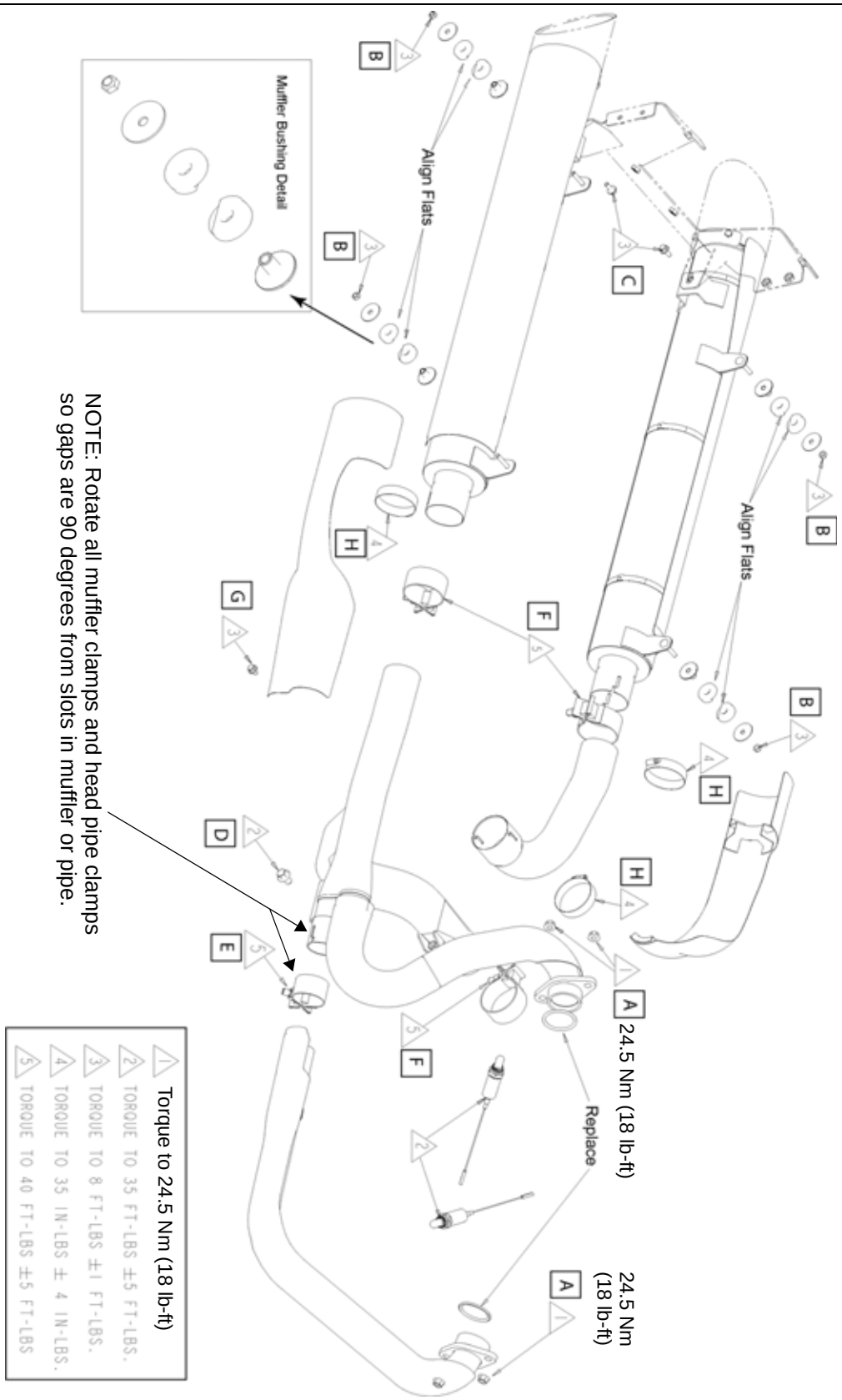

© 2009 Polaris Sales Inc.

ASSEMBLY VIEW - MUFFLER & HEAD PIPE SHIELDS

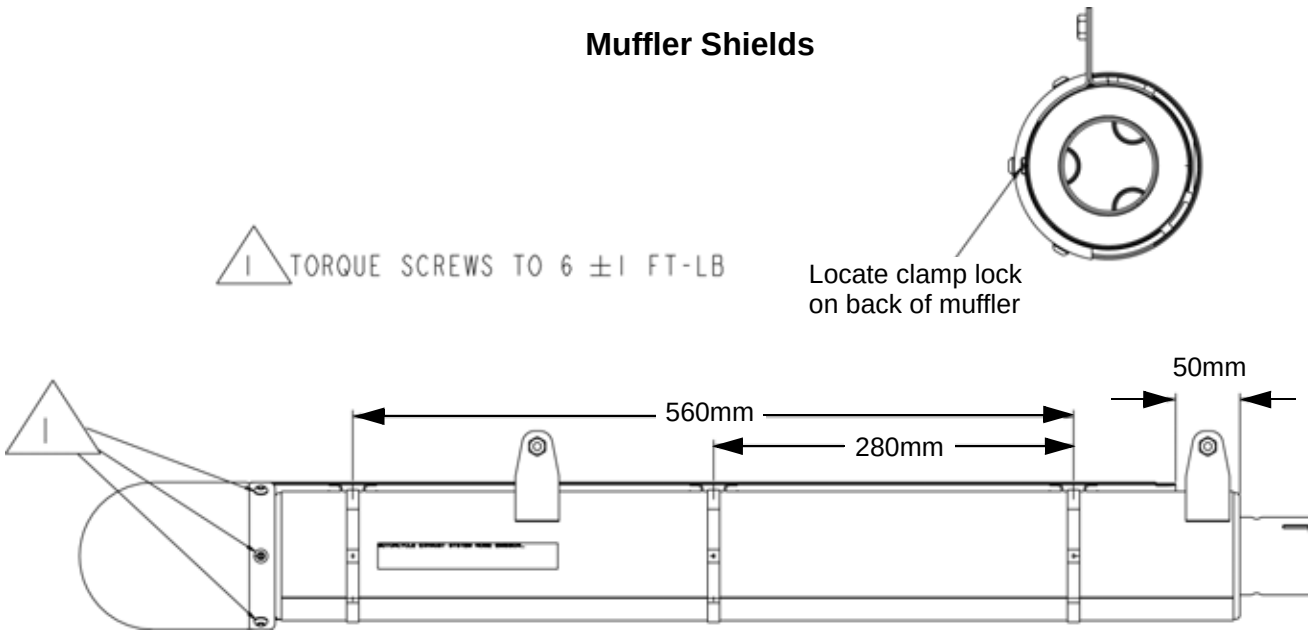

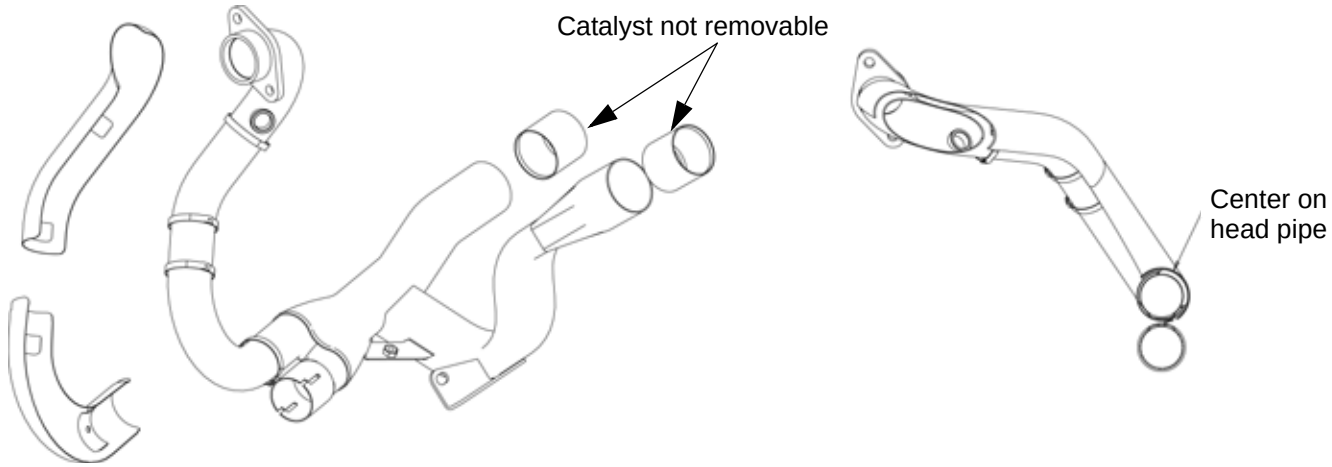

Head Pipe Shields

© 2009 Polaris Sales Inc.

EXHAUST MUFFLER REMOVAL

NOTICE: Allow exhaust to cool completely before you begin work. After the exhaust has cooled, joints can be sprayed with a spray lubricant to ease removal.

Removal

1. Remove side covers (page 3.27).
2. Remove both left and right lower access panels (below the saddlebags) (page 3.28).
3. Remove chrome shield at the front of the left and right mufflers. Twist clamps to disconnect and remove. Note orientation of clamps before removing.
4. Remove (2) nuts, washers, and support grommets from the muffler mounts.

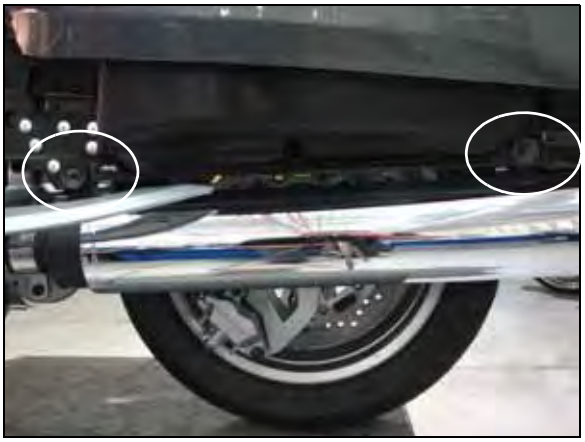

5. Remove bolt at the rear of each muffler that fastens the muffler to the bumper bracket.

6. Loosen both the muffler clamp and the crossover pipe clamp on the left side, and the muffler clamp and head pipe bolt (near the crossover pipe) on the right side.

NOTE: Even if you do not plan to remove the head pipes, removal of the chrome shields and loosening both clamps (left side shown below) and head pipe mounting bolt (on right side) will allow more movement of the muffler to expand the joint.

7. Slide muffler clamp(s) off joint(s) and spray joint(s) with lubricant.

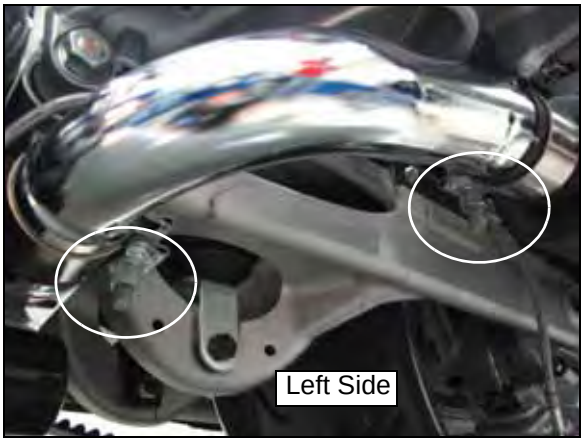

8. Hook slot (A) of Exhaust Muffler Wrench PV-49946 on muffler bracket (B) as shown below. Pull handle of tool to rotate muffler until studs (C) are clear of mounting slots on inner saddlebag.

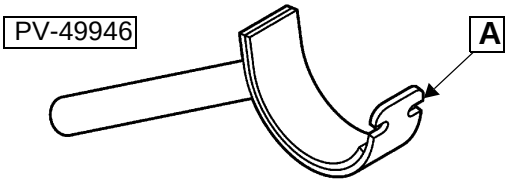

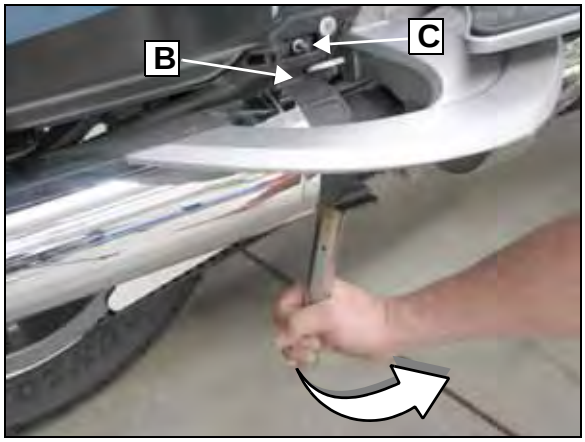

© 2009 Polaris Sales Inc.

9. Move the muffler back and forth to expand the joint and allow lubricant to enter. Tap muffler with a rubber hammer at the front (D) and slide it off the head pipe or use Exhaust Muffler Wrench (PV-49946) to rotate muffler back and forth until loose.

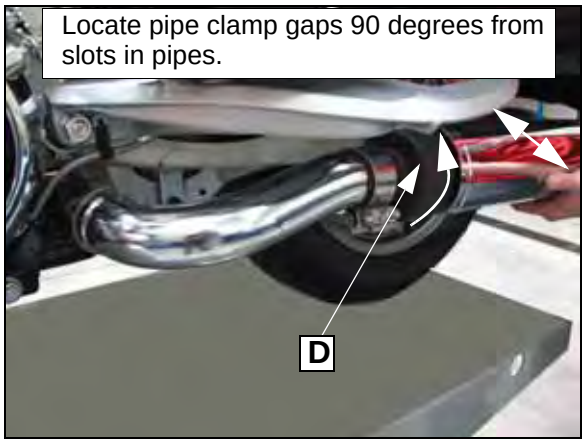

EXHAUST MUFFLER INSTALLATION

1. Clean all lubricant from the exhaust joints (if used for removal).
2. Place muffler bushing and Slide muffler onto head pipe as far as possible until studs are aligned with slots of inner saddlebag.
3. Hook Exhaust Muffler Wrench (PV-49946) onto muffler bracket in the opposite direction as for removal, and rotate the muffler until studs are engaged in slots.
4. Locate pipe clamp gaps away from pipe slots. Torque all fasteners and clamps (page 3.45).
5. Clean exhaust pipes to remove all oil, grease, or fingerprints before running the engine to check for exhaust leaks.

HEAD PIPE REMOVAL

NOTICE: Allow exhaust to cool completely before you begin work. After exhaust has cooled, joints can be sprayed with a spray lubricant to ease removal.

Removal

1. Remove mufflers (page 3.47).
2. Remove right leg fairing.
3. Remove right floorboard support (page 3.42).
4. Lift the tab on each oxygen sensor connector and disconnect. **DO NOT attempt to remove the wire from the sensor!** Open wire guides and remove wire from guides in the vicinity of the sensors.
5. ***Loosen*** rear head pipe flange nuts about 3 turns. *Do not remove the flange nuts at this time*. **Leave front head pipe flange nuts tight.**
6. Loosen clamp on lower head pipe.
7. Remove oil filter and cover filter mounting area to prevent debris from entering.
8. Spray lubricant on lower head pipe joint.
9. Move rear head pipe assembly back and forth to expand lower pipe joint and allow lubricant to work into joint.
10. Remove rear flange nuts.
11. Pull rear head pipe rearward and rotate it outward until clear of engine and front head pipe.
12. Remove front head pipe flange nuts and pipe.

Installation

1. Clean all lubricant from exhaust joints (if used for removal).
2. Install new head pipe gaskets.
3. Reverse removal steps to install head pipes
4. Install mufflers and shields.
5. Clean exhaust to remove all oil, grease, or fingerprints before starting the engine to check for exhaust leaks.

© 2009 Polaris Sales Inc.

CHAPTER 4
LUBRICATION & COOLING

OILING SYSTEM 4.2
OPERATION 4.2
TROUBLESHOOTING 4.2
SPECIAL TOOLS 4.2
OILING SYSTEM DATA 4.3
SPECIFICATIONS - LUBRICATION 4.3
OIL FLOW 4.4
DIAGRAM 4.4
OIL COOLER 4.5
ASSEMBLY VIEW - OIL COOLER AND LINES 4.5
OIL COOLER INSPECTION / CLEANING 4.6
OIL COOLER REMOVAL 4.6
OIL COOLER / LINE INSTALLATION 4.7
OIL PRESSURE INSPECTION 4.8
LUBRICATION OIL PRESSURE 4.8
COOLING OIL FLOW INSPECTION 4.8
OIL PUMP 4.9
OIL PUMP REMOVAL 4.9
OIL PRESSURE RELIEF VALVES 4.10
OIL PUMP INSPECTION 4.11
OIL PUMP DISASSEMBLY 4.12
OIL PUMP ASSEMBLY 4.13
OIL PUMP INSTALLATION 4.15

© 2009 Polaris Sales Inc.

OILING SYSTEM

OPERATION

The engine must be running in order to perform some of the procedures in this section. Read, understand and follow the warnings and cautions contained in this section.

The oil pump has two sets of internal gerotors. One set provides lubrication pressure and the other provides cooling oil pressure. There is a separate pressure relief valve located on the oil pump for each oiling system.

The engine must be removed from the frame and disassembled to access the oil pump. Use the troubleshooting charts contained in this chapter before removing and disassembling the engine.

Check lubrication side oil pressure any time an engine is making objectionable noises that appear to be coming from rotating parts. Check oil pressure before the engine is disassembled. Re-check oil pressure following a repair.

Cooling oil pressure troubleshooting is accomplished by verifying cooling oil *flow* as opposed to cooling oil *pressure.* See oil pressure testing on page 4.8.

WARNING

DO NOT loosen any oil line connections with the engine running, or within 30 minutes of operation. Oil inside the lines could be under pressure.

WARNING

Never run an engine in an enclosed area. Exhaust contains poisonous carbon monoxide gas that can cause loss of consciousness or death. Operate the engine in an open area or with an exhaust evacuation system connected and functioning properly.

WARNING

The engine components, oil and exhaust system become hot during operation and remain hot for a period of time after the engine is shut off. Wear eye protection and heat-resistant garments for hands and arms if working on a hot engine or wait until the components have cooled sufficiently before working on the machine.

TROUBLESHOOTING

LOW OIL PRESSURE	HIGH OIL PRESSURE
Incorrect oil being used or low oil level	Incorrect oil being used
Engine temp above test temperature range	Additives added to oil to increase viscosity
Damaged O-rings or leaks at pipes or fittings	Engine temp below test temperature range
Damaged or worn oil pump or oil pump drive	Restricted oil passages
Pressure relief valve stuck open	Incorrect oil filter
Damaged engine bearings/excessive engine wear.	Pressure relief valve stuck closed
Restricted oil filter, oil filter screen or passages	

SPECIAL TOOLS

Oil Pressure Gauge PV-43531

Moly Assembly Paste PN 2871460

5mm Ball Drive Allen Socket (commercially available)

© 2009 Polaris Sales Inc.

OILING SYSTEM DATA

SPECIFICATIONS - LUBRICATION

LUBRICATION & COOLING SYSTEM			
Item		Standard	Service Limit
Engine Oil Capacity (After Disassembly)		4.75 Liters (5.0 U.S. qts)	Not Applicable
Engine Oil Capacity (At Change) Fill to full line with the engine at operating temperature.		Approximately 4.25 Liters (4.5 U.S. qts)	Not Applicable
Recommended Engine Oil If Victory 20W/40 is not available, use motorcycle oil suitable for wet clutches (such as those with JASO MA rating). DO NOT use additives of any kind.		Victory 20W/40 for all operating temperatures.	Not Applicable
Oil Pressure @ 3000 rpm (Lubrication System) **Measurements must be taken with engine at operating temperature (82°C/180°F) and specified Victory Engine Oil**		552 kPa (80 psi)	Readings should be within 20% of the specifications. Minimum *Lubrication* Pressure 276 kPa (40 psi)
Oil Pressure (Cooling System)		No measurement. See page 4.8.	-
Oil Pump Clearances	Rotor Tip Clearance	.12 mm (.005")	.18 mm (.007")
	Pump Body Clearance	.10 mm (.004")	.26 mm (.010")
	Pump End Clearance	.025 mm (.001")	.10 mm (.004")
	Cooling Rotor Width	14.96 mm (.5889")	14.90 mm (.5866")
	Lubrication Rotor Width	9.99 mm (.3933")	9.90 mm (.3897")
	Shaft End Play (Check assembly of pump if excessive)	2.0 mm (.080")	± .5 mm (.020")

Fastener Torque Specifications - Lubrication & Cooling		
Description	**Torque Nm**	**Torque lb-ft (lb-in)**
Cylinder Head Temperature Sensor - (CHT) - (Install new if removed)	13.5	10 lb-ft
Oil Cooler Lower Support Bracket	13.5	(120 lb-in)
Oil Drain Plug	20 Nm	15 lb-ft
Oil Filter - apply oil to filter O-ring	8 Nm (71 lb-in) Approximately 3/4 turn after sealing ring has contacted the engine case.	
Oil Filter Nipple (threaded fitting to crankcase)	61	45
Oil Line to Crankcase	10	(85 lb-in)
Oil Lines to Cooler	10	(85 lb-in)
Oil Pressure Relief Valves	6	20 lb-ft
Oil Pressure Sensor Loctite™ 565 or pipe sealant	14	(125 lb-in)
Oil Pump to Crankcase / Oil Tube to Crankcase	10	(85 lb-in)
Oil Pump Sprocket	10	(85 lb-in)

© 2009 Polaris Sales Inc.

OIL FLOW
DIAGRAM

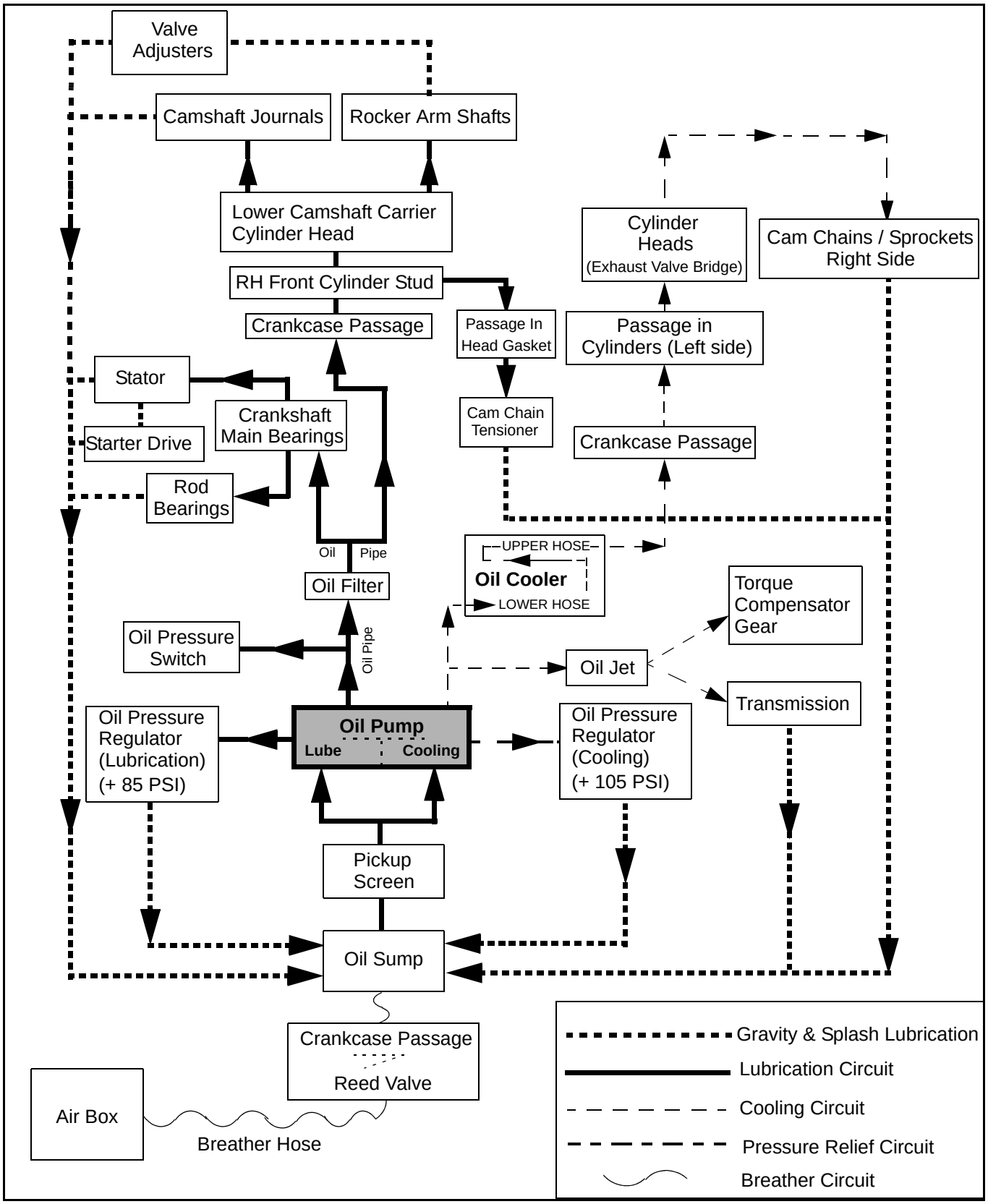

© 2009 Polaris Sales Inc.

OIL COOLER

ASSEMBLY VIEW - OIL COOLER AND LINES

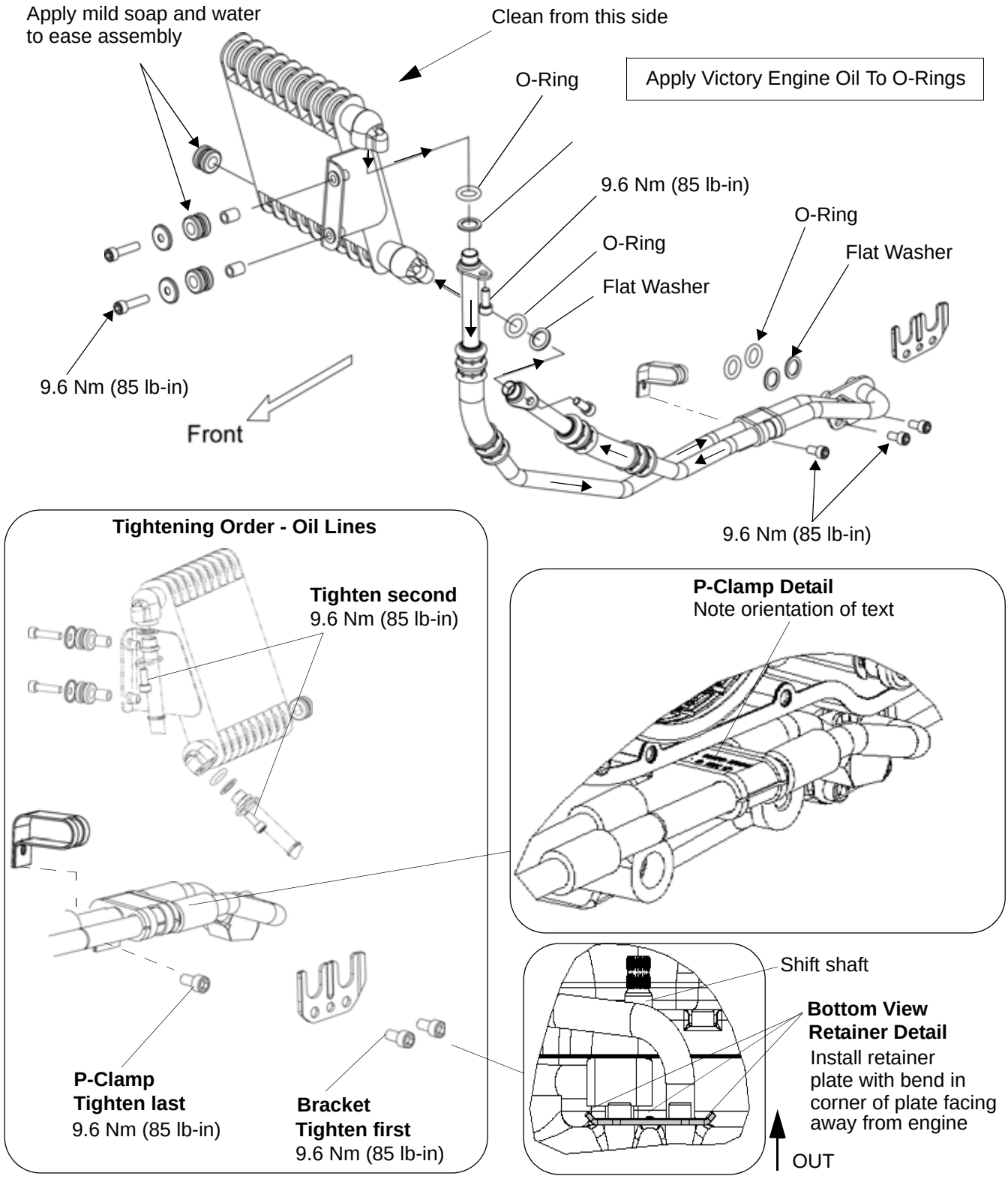

© 2009 Polaris Sales Inc.

OIL COOLER INSPECTION / CLEANING

1. Inspect cooler, lines, and all connections for leaks.
2. Inspect lines for proper routing. Replace if there is any sign of abrasion or damage.
3. Inspect cooler surface for obstructions or debris.
4. Rinse from back side to front with low pressure water.
5. Inspect oil cooler fins for deformation. Fins can be straightened if not severely deformed and no oil leaks are present.
6. Inspect cooler mounting fastener for proper torque. Inspect mounting bracket and rubber grommets for cracks or damage (page 4.5).
7. Replace any damaged components.

OIL COOLER REMOVAL

Also refer to Illustration on page 4.5.

1. Place drain pan beneath oil cooler and lines.
2. Remove screws (A) and disconnect oil lines.
3. Remove mounting screws (B).
4. Slide cooler off of grommet (C).

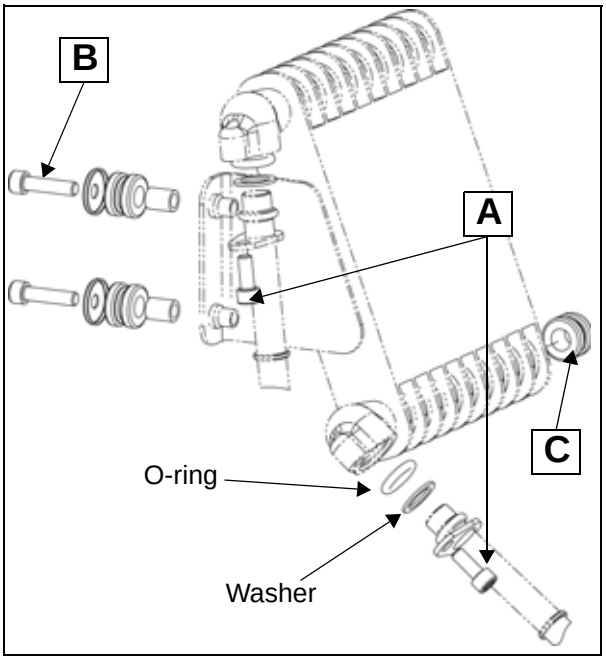

5. Carefully remove from bracket.

© 2009 Polaris Sales Inc.

OIL COOLER / LINE INSTALLATION

Refer to Illustration on page 4.5 for detail views.

Oil Lines to Engine

1. Installation of lines to engine is easier with lines removed at the oil cooler end.
2. Assemble support grommet (A) with print facing UP. Install P-clamp (B) over grommets. See P-clamp detail on page 4.5. Do not tighten P-clamp screw.
3. Install new backing washers (C) on lines.
4. Lubricate new O-rings (D) with engine oil and install against backing washers.
5. Clean oil line sealing surfaces on engine. Carefully assemble lines to engine by rotating the lines to clear primary cover or gasket surface and frame.
6. Install retainer plate (E) with curved ends facing OUT.
7. Install screws and torque to 9.6 Nm (85 lb-in).
8. If lines are not attached to cooler, install them before before installing P-clamp. Install P-clamp screw.

Oil Cooler Installation

If oil lines were removed from cooler and engine, install engine end first.

1. Lubricate cooler support grommets in bracket with mild soap and water solution.
2. Install cooler, engaging post with grommet.
3. Install mounting screws.

Oil Lines to Cooler

1. Install new backing washers on oil lines.
2. Lubricate new O-rings with engine oil and install on lines against backing washers.
3. Carefully assemble lines to cooler.
4. Install screws and torque to 9.6 Nm (85 lb-in).

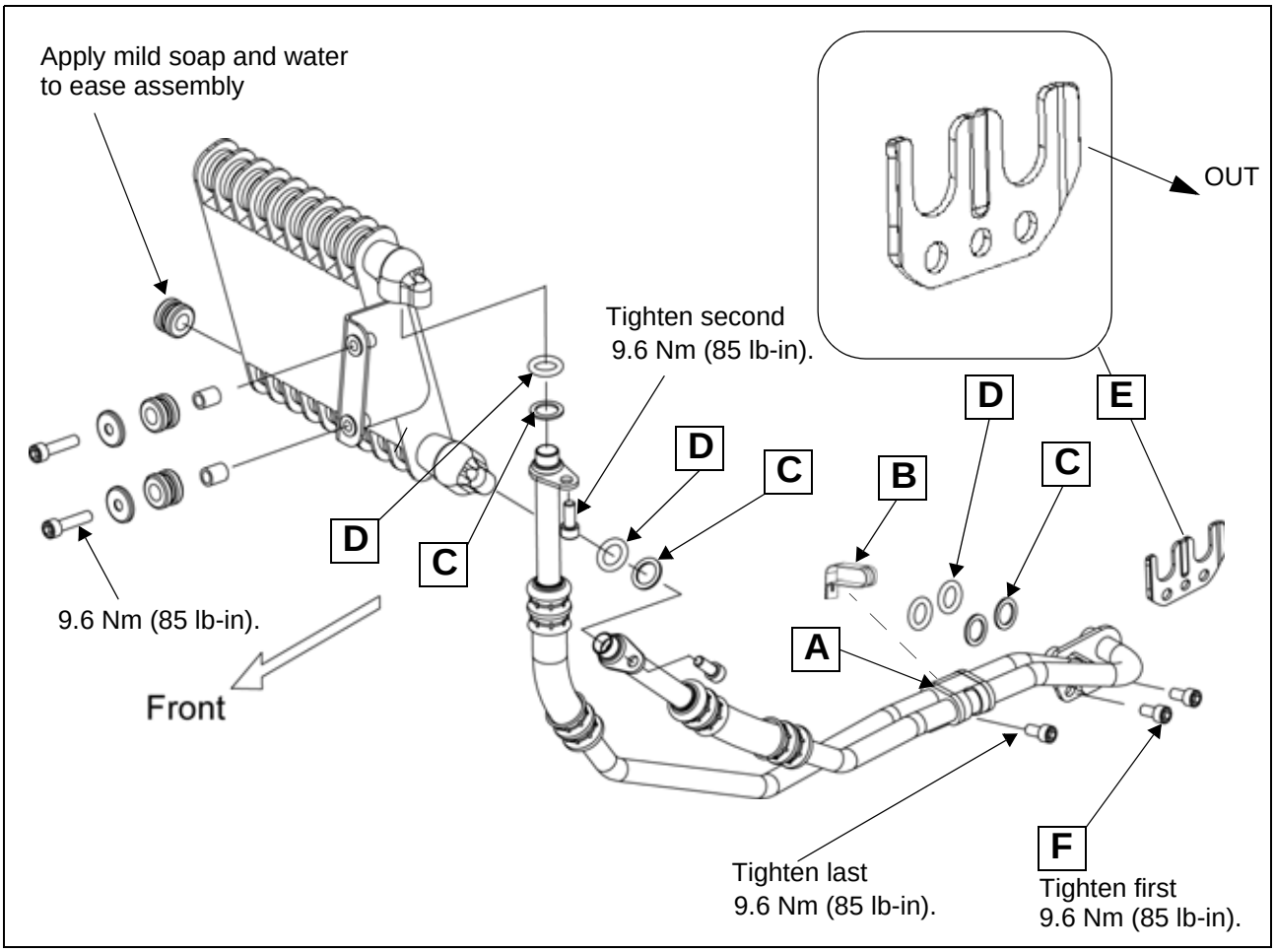

© 2009 Polaris Sales Inc.

OIL PRESSURE INSPECTION

LUBRICATION OIL PRESSURE

Use caution when working around hot engine oil. Review all WARNINGS on page 4.2.

1. Warm engine to operating temperature.
2. Stop the engine.
3. Remove oil pressure sensor (A).
4. Install oil pressure gauge adapter.

Oil pressure gauge: PV-43531

Lubrication System Pressure

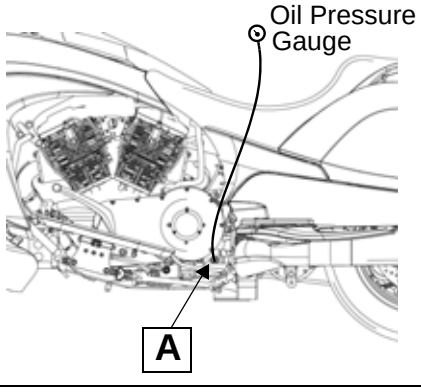

5. Check engine oil using dipstick. Add recommended oil if necessary.
6. Start engine and check oil pressure at 3000 rpm.
7. If oil pressure is outside of specification, refer to the troubleshooting on page 4.2.
8. Once testing is completed clean threads with Loctite™ Primer N, apply thread sealant to the threads in area indicated in Fig. 1 and install.

Oil Pressure Sensor

TORQUE: Oil Pressure Sensor

14.0 Nm (125 lb-in)

COOLING OIL FLOW INSPECTION

Cooling oil inspection is accomplished by verifying oil flow through the cooler. The temperature of the cooler should be close to crankcase temperature. Pressure testing cannot be performed at the Cylinder Head Temperature (CHT) port, because the sensor does not enter the cooling oil passage. Cooling oil pressure changes along various paths and designed flow restrictions located inside the engine (like voltage drops across a resistive electrical circuit). Diagnostics should be limited to verifying that oil is flowing through the cooler, and that air flow through the cooler and to the engine cylinder fins is unobstructed. Cooling oil enters the cooler on the bottom line and exits (back to the engine) on the upper line.

IMPORTANT! Tip conforms to cylinder head metal when installed. It does not contact the cooling oil passage!

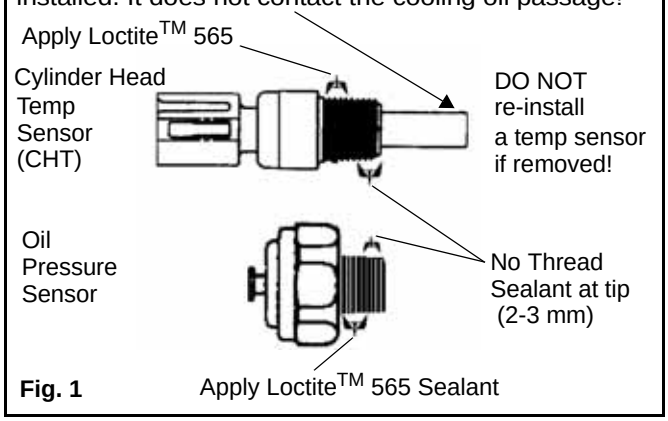

Fig. 1

Cylinder Head Temperature Sensor (CHT)

TORQUE: Temperature Sensor
REPLACE WITH NEW IF REMOVED
13.5 Nm (10 lb-ft)
Do Not Overtighten

NOTE: See Chapter 5 for temperature sensor location and installation.

Item	Standard	Service Limit
Lubrication Oil Pressure @ 3000 rpm Measure at Oil Pressure Sensor @ 82°C/180°F	552 kPa (80 psi)	Standard ±20% MINIMUM pressure is 276 kPa (40 PSI)
Cooling Oil	OIL FLOW	-

© 2009 Polaris Sales Inc.

OIL PUMP

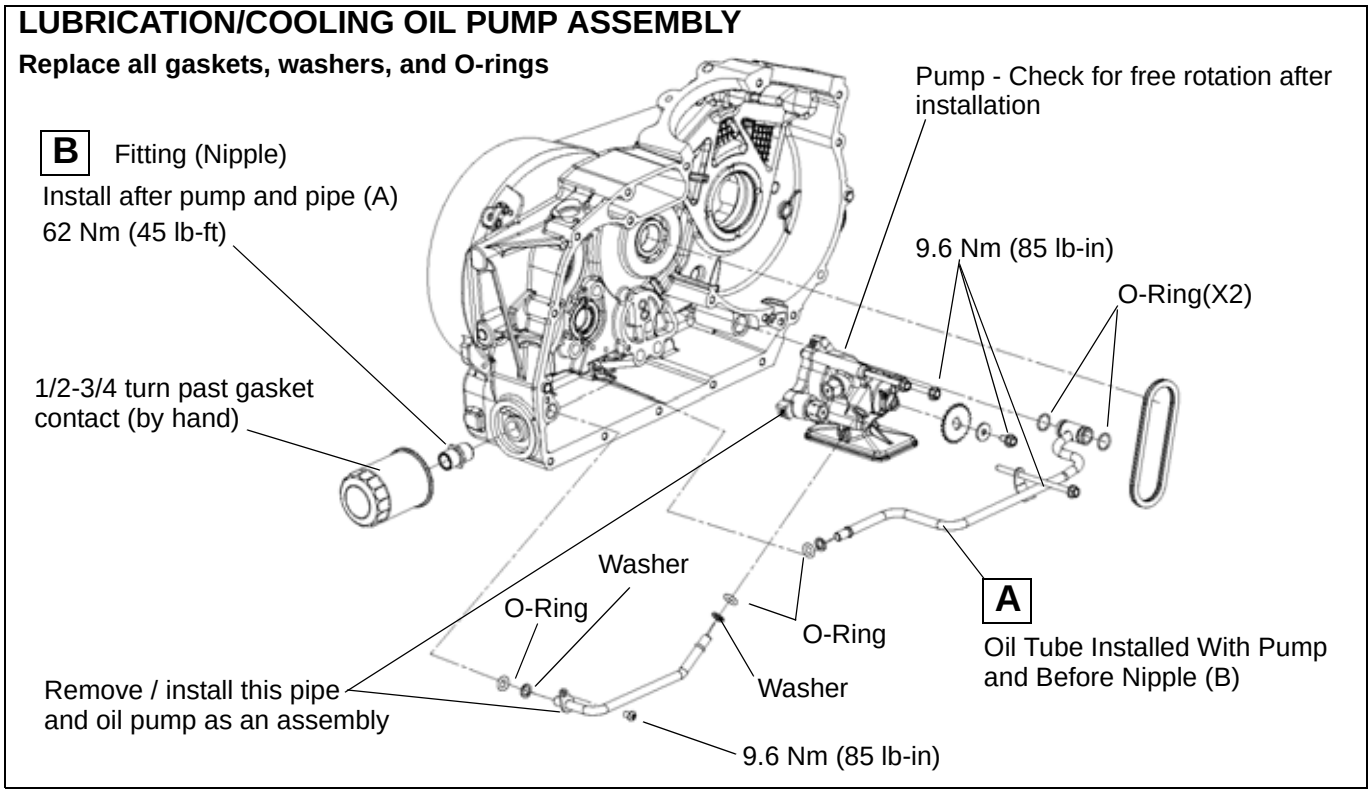

OIL PUMP REMOVAL

1. Disassemble engine to access oil pump. (Refer to Chapters 6-10)

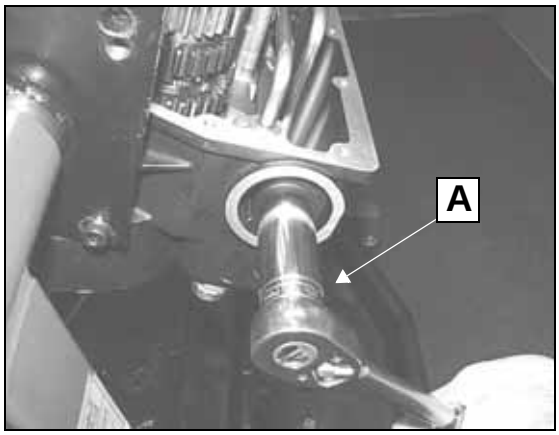

2. Remove oil filter and oil filter nipple (fitting) (A).

NOTE: The oil filter nipple MUST be removed to remove the long oil delivery tube. See photo above.

3. Remove retaining screw for short oil tube (B).

NOTE: The washers and/or O-rings for the oil piping may stay in the engine cases/oil pump body. Be sure to retrieve the used O-rings and washers and discard. Use new O-rings and washers during assembly.

4. Remove oil pump drive sprocket bolt and sprocket (C).
5. Remove (3) oil pump mounting bolts (D). The oil pump mounting bolts also hold the oil pump body together.

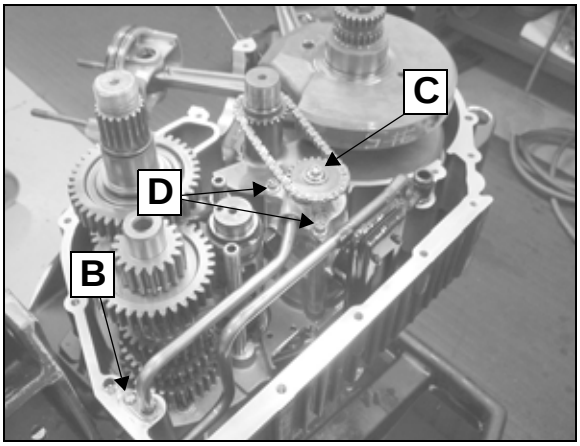

6. Remove long oil tube.
7. Remove oil pump and short oil tube together as a unit. Use caution not to drop any parts when removing oil pump from crankcase.

© 2009 Polaris Sales Inc.

OIL PRESSURE RELIEF VALVES

The lubrication and cooling systems operate at different oil pressures, regulated by pressure relief valves. The valves are not interchangeable. Be sure to install each valve in the proper location on the oil pump. The lubrication pressure relief valve screws into the main oil pump body, and has a SHORTER hexagonal portion. The cooling pressure relief valve screws into the oil pump base, and has a LONGER hexagonal portion.

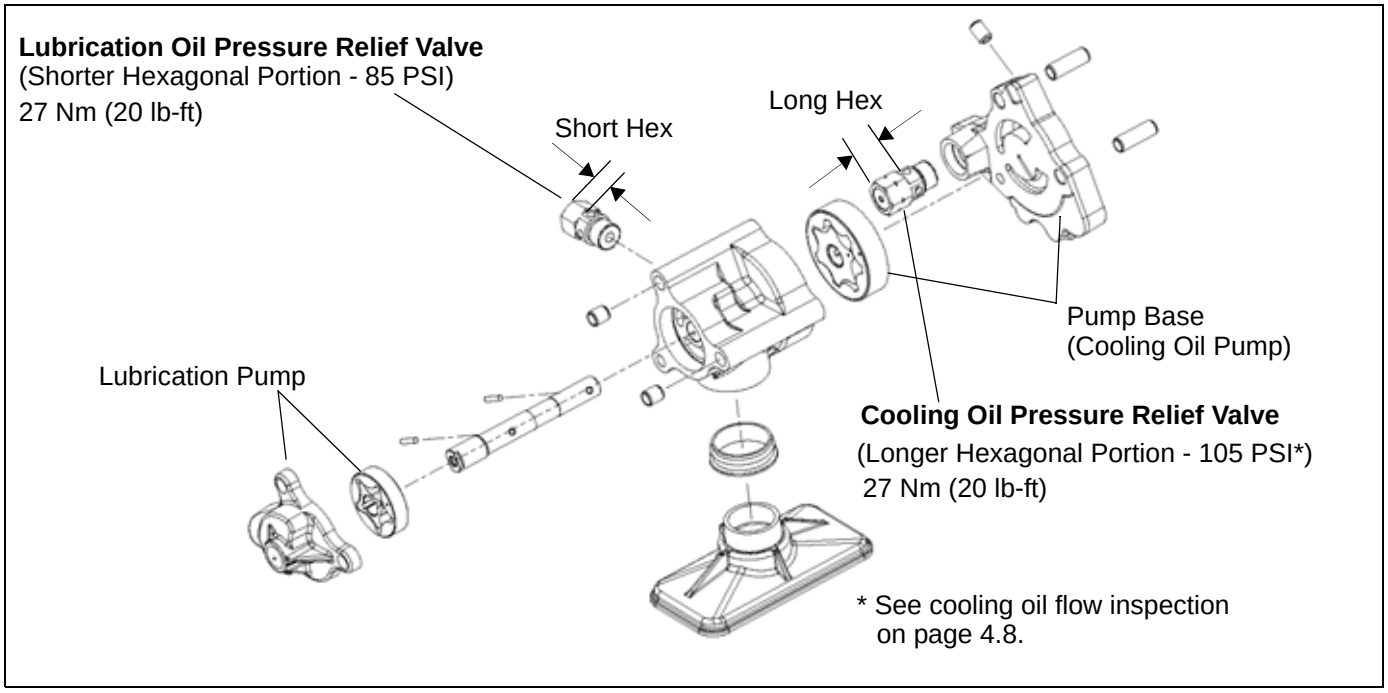

1. Remove the relief valves. The lubrication relief valve (A) has a SHORTER hexagonal portion and screws into the pump BODY (B). The cooling pressure relief valve (C) has a longer hexagonal portion and screws into the pump BASE (D).
2. Visually inspect the relief valve for obstruction or unusual wear.

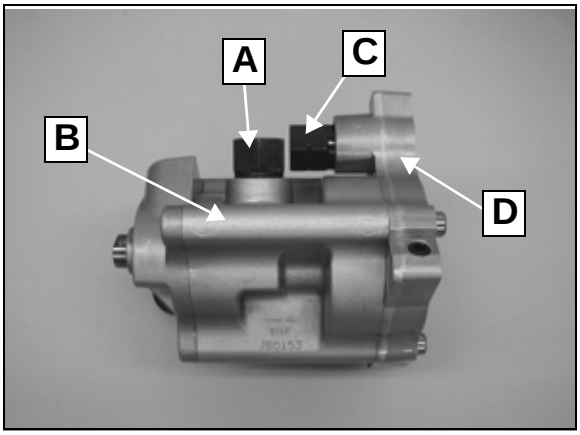

© 2009 Polaris Sales Inc.

OIL PUMP INSPECTION

Inspect the oil pump when lubrication oil pressure is below specification. The oil pump contains 2 sets of inner and outer gerotors. Follow the inspection procedure for both sets of gerotors and both ends of the pump.

Keep gerotors together as a set, and keep them oriented the same way (dots on each gerotor must be on the same side upon assembly). Part not interchangeable.

If dots on the gerotors are not visible, mark the gerotors upon disassembly so they can be matched and oriented properly upon assembly.

Before disassembling pump completely, follow these inspection steps, and compare to specifications on page 4.3**.**

1. Remove the pump base (A) and lubrication side end cap (B).

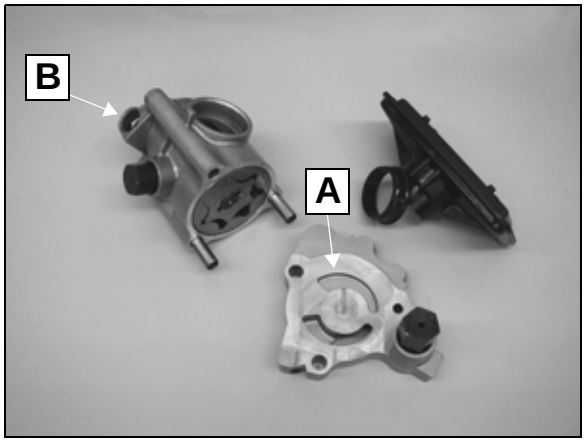

2. Measure tip clearance as shown below for both cooling (larger gerotor set) and lubrication.

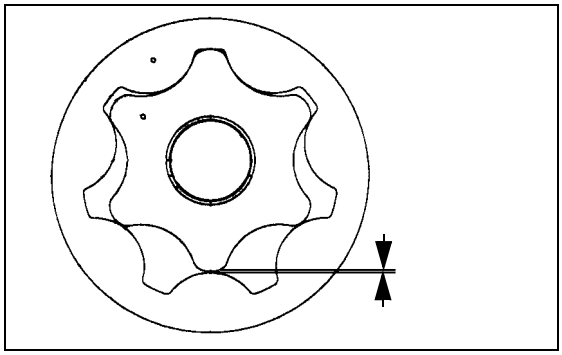

3. Measure clearance between pump body and outer gerotor on the lubrication side.

4. Measure clearance between pump body and outer gerotor on the cooling side.

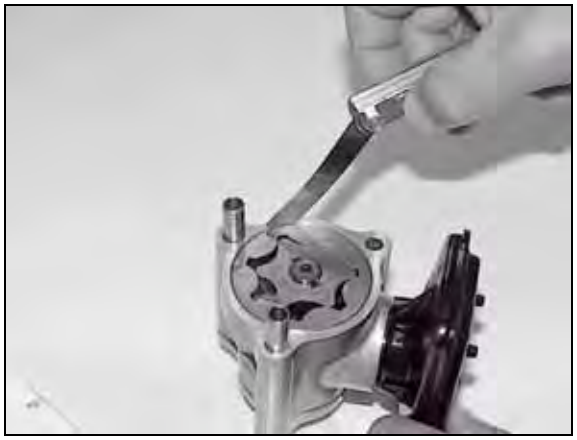

5. Measure the oil pump end clearance with a feeler gauge at point “A”. Lubrication side of pump is shown below. Cooling side is measured in the same manner.

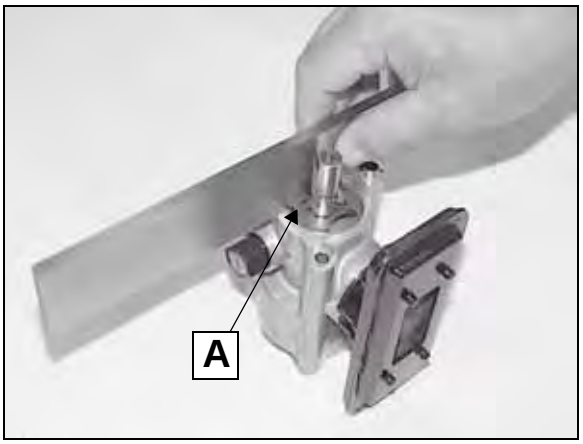

© 2009 Polaris Sales Inc.

OIL PUMP DISASSEMBLY

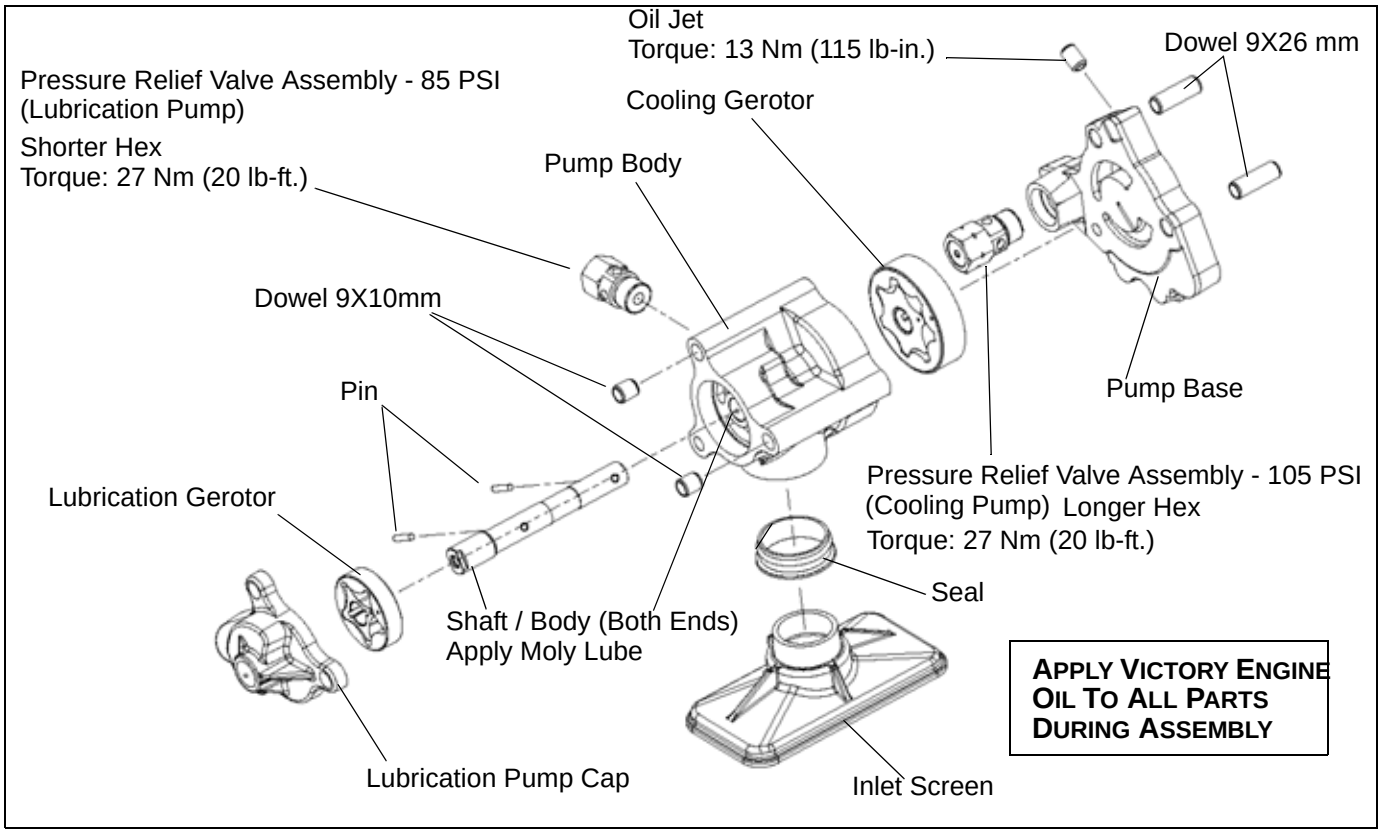

NOTE: Keep all parts together during disassembly. Note orientation of dots on gerotors for assembly. Gerotors must be assembled with the dots on the same side. They do not need to be aligned with each other.

6. Remove cooling outer gerotor.

7. Push on opposite end of shaft to allow pin to be removed from lubrication gerotor. Pull lubrication rotor back to expose pin and remove pin.

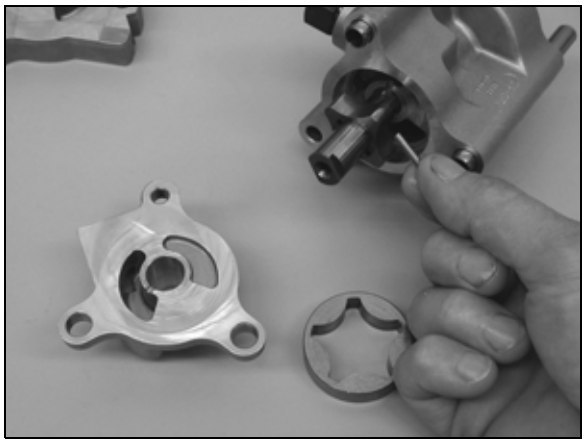

8. Push shaft back toward cooling end of pump and remove pin from cooling gerotor.
9. Pull shaft with inner rotor from pump body.
10. Clean all parts and inspect for wear.
11. Dry with compressed air

© 2009 Polaris Sales Inc.

OIL PUMP ASSEMBLY

Refer to Illustration on page 4.12 for assembly view and torque values.

1. Press short dowel pins into lubrication side of pump body using an arbor press and a 6mm allen head screw (A).

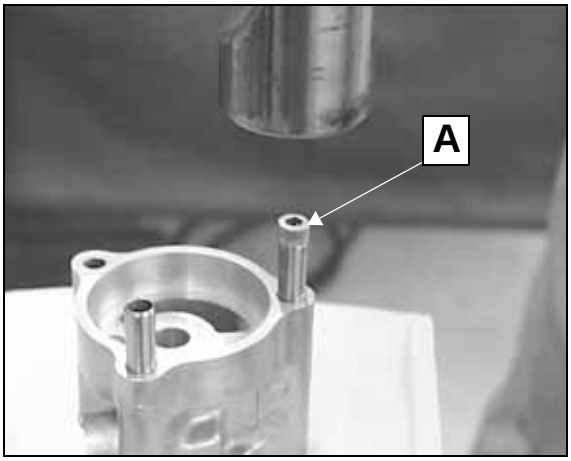

2. Press long dowel pins into cooling side of pump body using same method as above.
3. Secure pump body in a soft jaw vise. Apply Victory engine oil to threads of lubrication pressure relief valve and install into pump body. The lubrication relief valve has a shorter hexagonal portion than the cooling relief valve. torque to (20 lb-ft).

4. Assemble lubrication gerotor on pump shaft.

5. Lubricate shaft with moly assembly paste PN 2871460.
6. Insert pump shaft/rotor assembly into pump body in direction shown (B).

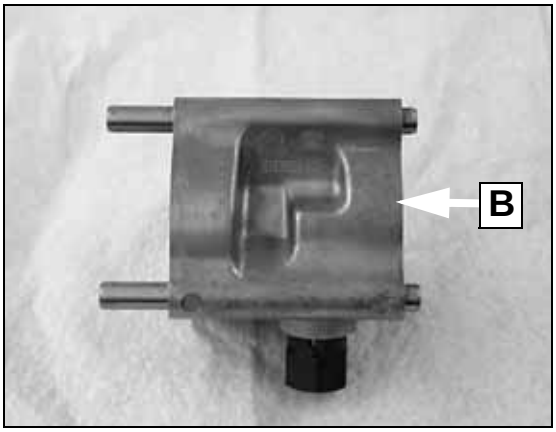

7. Lubricate and install the cooling gerotor with pin slot (C) facing OUT.
8. Insert pin (D) into shaft on cooling side.
9. Push shaft inward while rotating to align pin and slot.

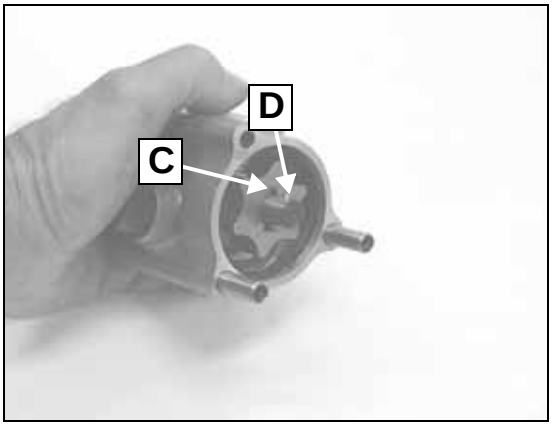

© 2009 Polaris Sales Inc.

10. Install outer gerotor.

11. Push shaft toward lubrication side and hold in place. Install pin for lubrication rotor. Lubricate both gerotors with oil.

12. Secure pump base in a soft jaw vise. Apply Victory engine oil to threads of cooling pressure relief valve and install into pump base. The cooling relief valve has a longer hexagonal portion than the lubrication relief valve. **Torque to 27 Nm (20 lb-ft).**

13. Install oil jet to oil pump base.
Torque to 13 Nm (115 lb-in)

14. Lubricate pressure relief valve assemblies and both lubrication and cooling gerotors with engine oil.

15. Install base (A) and body cap (B) to pump.

16. Install a new oil inlet seal to inlet screen (C).

17. Pre-lubricate the entire oil pump and relief valves with Victory engine oil and assemble screen to oil pump body, aligning groove (D) in screen to tab on pump.

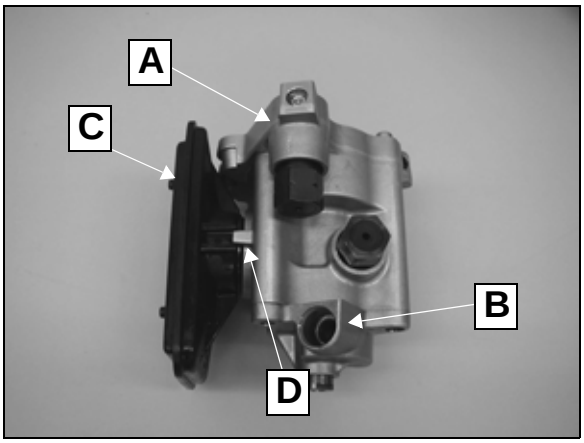

© 2009 Polaris Sales Inc.

OIL PUMP INSTALLATION

1. Refer to Fig. 2. Clean oil pipes and dry with compressed air.

NOTE: After oil pump is installed, be sure the pump rotates freely by installing the sprocket without the chain and rotating pump a few revolutions.

2. Use new washers and O-rings upon assembly.
3. Install a backing washer (A) and lightly oiled O-ring (B) onto short oil pipe. Insert pipe into pump body with a twisting motion until seated.
4. Place washer (C) onto the other end of short oil pipe followed by a new lightly oiled O-ring (D).
5. Install oil pump and short pipe into left crankcase. Start by inserting oil pipe into rear of crankcase, then place oil pump into crankcase alignment holes.
6. Start the top two oil pump retaining bolts (E) and the rear pipe bolt (F) but do not tighten at this time.
7. Install new oiled O-rings (G) onto front of long oil pipe. Install new washer (H) on end of pipe and a new O-ring (I).
8. Fit front end of long oil pipe into position at front of crankcase and rear of pipe through oil filter nipple opening in crankcase. Install pipe retaining bolt (J).
9. Torque all pump fasteners to specification.
10. Install oil filter nipple (K). Center the oil pipe to the fitting with a 1/4 inch pin punch as shown.
11. Temporarily install pump sprocket on pump shaft (without the chain) and turn oil pump over by hand.

NOTE: Turn pump shaft by hand a few revolutions to make sure it turns freely.

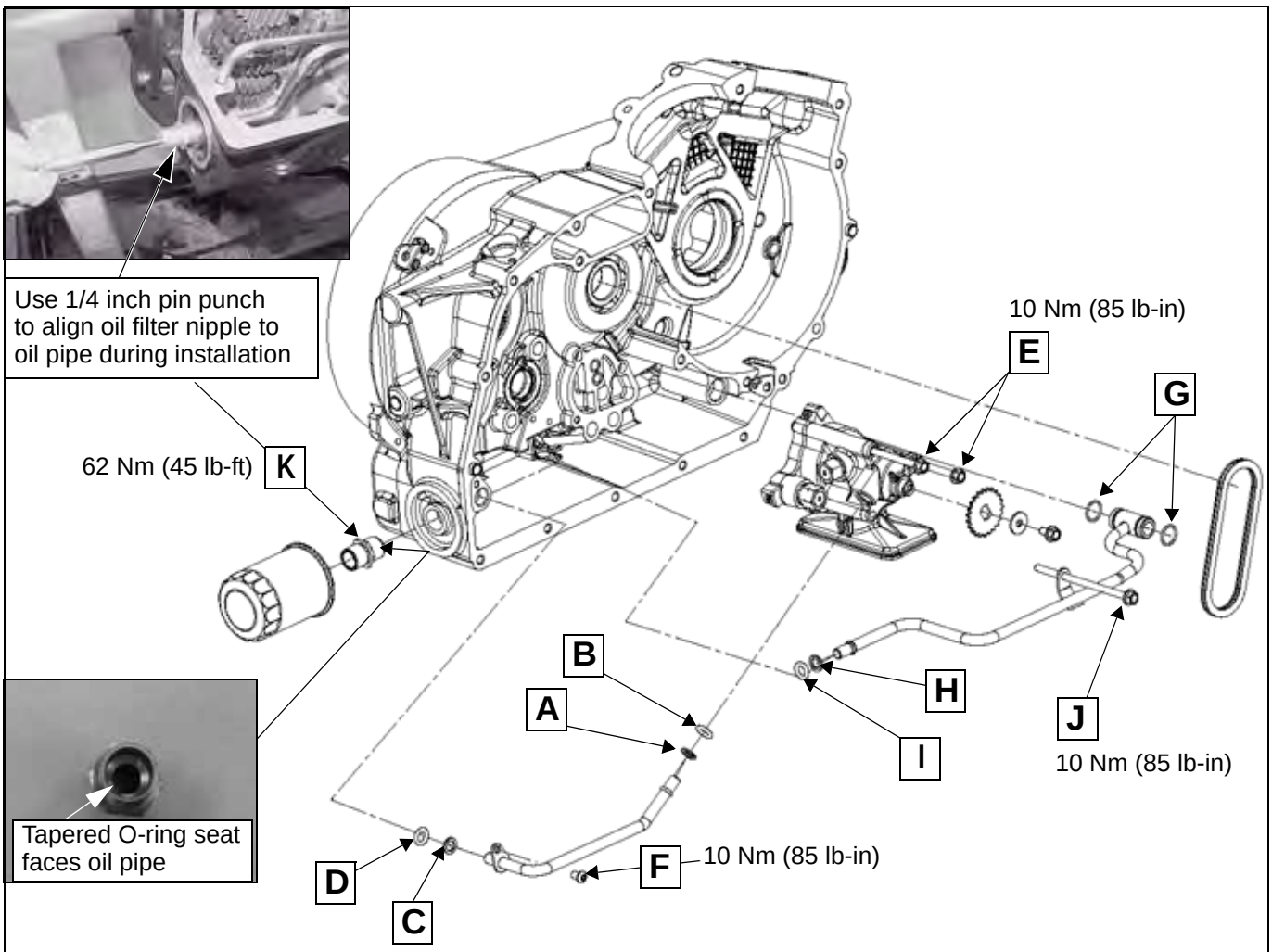

Fig. 2

© 2009 Polaris Sales Inc.

12. Remove sprocket so chain can be installed.
13. Install chain over oil pump sprocket and balance shaft sprocket. Align pump sprocket to shaft and install retaining bolt (A). Torque to 9.6 Nm (85 lb-in).

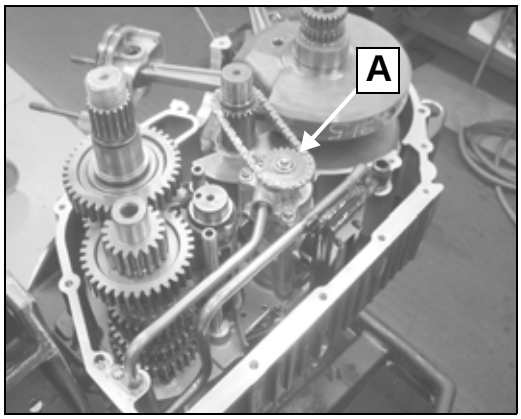

NOTE: The sprocket is a floating design. A small amount of end play is normal after tightening the retaining bolt.

14. Refer to Chapter 10 for crankcase assembly.
15. Verify proper lubrication oil pressure after assembly. Refer to page 4.8.

© 2009 Polaris Sales Inc.

CHAPTER 5
FUEL SYSTEM / FUEL INJECTION

SAFETY PRECAUTIONS 5.3
FUEL SAFETY 5.3
SPECIFICATIONS 5.4
SPECIAL TOOLS 5.4
TROUBLESHOOTING, BASIC 5.4
BASICS TROUBLESHOOTING 5.4
THROTTLE BODY FLOW SCREW AND 5.4
IDLE STOP SCREW 5.4
SERVICE PRECAUTIONS, EFI SYSTEM GENERAL 5.5
FUEL SYSTEM ASSEMBLY VIEWS 5.6
FUEL TANK HOSE CONNECTION - 49 STATE MODELS 5.6
FUEL TANK HOSE CONNECTION - CALIFORNIA MODELS 5.7
FUEL LEVEL SENSOR / FUEL PUMP 5.8
FUEL PUMP AND FUEL TANK ASSEMBLY VIEW 5.9
AIR INTAKE / BOX FRAME ASSEMBLY VIEW 5.9
IDLE AIR CONTROL ASSEMBLY VIEW 5.10
FUEL SYSTEM SERVICE 5.11
FUEL SYSTEM DEPRESSURIZATION 5.11
PRIMING THE FUEL SYSTEM 5.11
FUEL TANK VENT INSPECTION 5.11
FUEL PUMP REMOVAL 5.11
FUEL PUMP INSTALLATION 5.12
FUEL TANK ASSEMBLY VIEW 5.14
FUEL TANK REMOVAL 5.15
FUEL TANK INSTALLATION 5.15
FUEL PUMP CIRCUIT DIAGRAM 5.16
FUEL LEVEL SENSOR RESISTANCE TEST 5.17
FUEL LEVEL GUAGE 5.17
FUEL PUMP ELECTRICAL DIAGNOSTICS 5.18
FUEL PUMP SUPPLY VOLTAGE TEST 5.18
BATTERY VOLTAGE NOT REACHING FUEL PUMP 5.18
FUEL PUMP CURRENT DRAW TEST 5.19
FUEL PUMP PRESSURE INSPECTION 5.20
IDLE AIR CONTROL REMOVAL 5.21
EFI SYSTEM COMPONENTS 5.22
FUEL INJECTION COMPONENT LOCATIONS 5.22
FUEL RAIL / FUEL INJECTOR REMOVAL 5.23
FUEL RAIL INSTALLATION 5.23
FUEL INJECTION SYSTEM TESTING AND DIAGNOSTICS 5.24
FUEL INJECTION SYSTEM - OVERVIEW OF OPERATION 5.24
IDLE AIR CONTROL (IAC) - OVERVIEW OF OPERATION 5.24
SELF-DIAGNOSTIC FEATURE 5.24
ECM CONNECTOR MAP 5.25
VIEWING AND CLEARING TROUBLE CODES 5.26
SENSOR DIAGNOSTICS 5.26
TROUBLE CODES 5.27
SPN / FMI ERROR CODES 5.28
ECM HARNESS CONNECTOR TEST PRECAUTIONS 5.29
ECM CONNECTOR REMOVAL 5.29
ECM REMOVAL 5.29
EFI SENSOR CIRCUIT WIRING DIAGRAMS 5.30
EFI SENSOR CIRCUIT WIRING DIAGRAMS 5.31

© 2009 Polaris Sales Inc.

SENSOR TESTS. 5.32
THROTTLE POSITION SENSOR (TPS) DIAGNOSTICS 5.32
TEMPERATURE & MANIFOLD ABSOLUTE PRESSURE SENSOR (TMAP) 5.33
AIR TEMPERATURE SENSOR (ATS) DIAGNOSTICS. 5.34
CYLINDER HEAD TEMPERATURE SENSOR (CHT) DIAGNOSTICS 5.35
IDLE AIR CONTROL (IAC) 5.36
VEHICLE SPEED SENSOR TEST 5.37
GEAR POSITION SWITCH TEST 5.37
MEMORY CHECK SUM ERROR 5.37
TIPOVER SENSOR 5.37
CRANKSHAFT POSITION SENSOR DIAGNOSTICS. 5.38
BATTERY VOLTAGE AT ECM DIAGNOSTICS 5.38
DIGITAL WRENCH 5.39
USING DIGITAL WRENCH DIAGNOSTIC SOFTWARE. 5.39
TOOLS 5.39
DIAGNOSTIC SOFTWARE VERSION 5.39
TPS CALIBRATION NOT REQUIRED. 5.39
ECM REPLACEMENT 5.39
DIGITAL WRENCH FEATURES 5.40
GUIDED DIAGNOSTICS AVAILABLE 5.40
DIGITAL WRENCH COMMUNICATION ERRORS 5.40
DIGITAL WRENCH FEATURE MAP 5.41
DIGITAL WRENCH SCREEN EXAMPLES 5.42
DIGITAL WRENCH SCREEN EXAMPLES 5.43
DIGITAL WRENCH SCREEN EXAMPLES 5.44
REPROGRAMMING THE ENGINE CONTROL MODULE (ECM) OVERVIEW 5.45
REPROGRAMMING TIPS 5.45
REPROGRAMMING PROCESS 5.47
TROUBLESHOOTING 5.49

© 2009 Polaris Sales Inc.

SAFETY PRECAUTIONS

FUEL SAFETY

Many hazards are present when working on or around the fuel injection system. Read and pay close attention to the following warnings and cautions when working on any component in this section.

⚠ WARNING

Gasoline is extremely flammable and explosive under certain conditions.

Always stop the engine and refuel outdoors or in a well ventilated area.

Do not smoke or allow open flames or sparks in or near the area where refueling is performed or where gasoline is stored.

Do not overfill the tank. Do not fill the tank neck above the fuel tank insert. Leave air space to allow for fuel expansion.

If you get gasoline in your eyes or if you swallow gasoline, see your doctor immediately. Never try to syphon gasoline using mouth suction.

If you spill gasoline on your skin or clothing, immediately wash it off with soap and water and change clothing.

Never start the engine or let it run in an enclosed area. Engine exhaust fumes are poisonous and can cause loss of consciousness and death in a short time.

⚠ WARNING

Gasoline is extremely flammable and is explosive under certain conditions. Work in a well ventilated area. Open flames, sparks and cigarettes must be kept away from gasoline.

KEEP GASOLINE OUT OF REACH OF CHILDREN!

⚠ WARNING

Careless handling of the control cables can result in twisting or bending of the cables. This can cause the cables to stick or bind, resulting in loss of vehicle control.

⚠ WARNING

The engine exhaust from this product contains chemicals known to cause cancer, birth defects or other reproductive harm.

⚠ WARNING

The engine and exhaust system become very hot during operation and remains hot for a period of time after the engine is shut off. Wear insulated protection for hands and arms or wait until the engine and exhaust system have cooled before performing service work.

DO NOT TAMPER WITH THROTTLE BODY FLOW SCREW

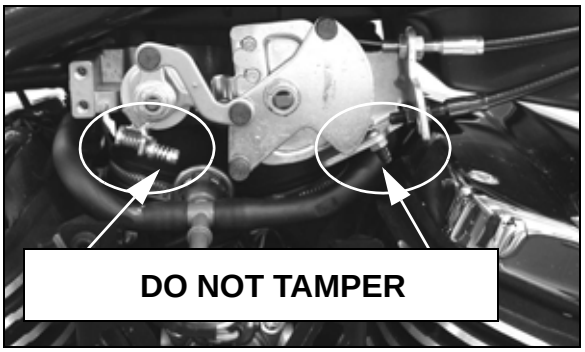

DO NOT TAMPER WITH IDLE STOP SCREW

© 2009 Polaris Sales Inc.

SPECIFICATIONS

FUEL SYSTEM SPECIFICATIONS

FUEL SYSTEM	
Item	**Specifications**
Fuel Octane (Minimum)	91 Octane (R+M/2)
Fuel Pump Pressure	3.50 BAR (350 kPa) (51 psi)
Fuel Pump Volume	45 liters/hr 325 ml/30 seconds 11 oz./30 seconds 0.165 gal/min
Idle Speed	950 rpm ± 100
Fast Idle Speed	Not Adjustable (Set by ECM / IAC valve)
Throttle Grip Free-Play	2-4 mm (1/16"-5/32")
Fuel Pump Current Draw	5A maximum
Injector Resistance	11.4 - 12.6 Ohms
Recommended Octane	91 Octane Minimum

NOTE: Idle speed is continuously monitored and adjusted by the ECM via the IAC valve. DO NOT tamper with or attempt to “adjust” the idle stop screw or throttle plate flow screw! They are factory pre-set. If idle is erratic or if idle speed is incorrect, refer to troubleshooting in this section to find the cause of the problem.

SPECIAL TOOLS

FUEL SYSTEM SERVICE TOOLS

TOOL DESCRIPTION	SPX PART NUMBER
Diagnostic Tool Kit - with Digital Wrench Software PU-47052-C (and license serial number), Standard Interface Cable PU-47151, and Victory Adapter PV-46085-2)	PV-46085
SmartLink Interface Kit* *Kit Includes: CAN Interface Cable (PU-47469) Serial Interface Cable (PU-47470)	PU-47471
Fuel Pressure Gauge	PU-43506-A
Fuel Pressure Gauge Adapter	PV-48656
Fluke 73 Digital Multi Meter	PV-43546
Electrical Connector Test Adapter Kit	PV-43526
Laptop Computer (Commercially Available)	-

TROUBLESHOOTING

BASICS TROUBLESHOOTING

NOTE: The closed-loop EFI system does not require TPS calibration. Refer to Fuel System Troubleshooting page 5.49 - 5.52.

DO NOT OVERLOOK THE BASICS WHEN TROUBLESHOOTING:

1. Battery in a low state of charge can cause problems. Be sure the battery is in good condition and fully charged.
2. Air leaks in intake tract / air box - check for air leaks and repair to avoid mis-diagnosing the EFI system.
3. Contaminated or improper fuel.
4. Restricted fuel flow / filters (low fuel pressure).
5. Fuel tank vent line pinched or obstructed.
6. Faulty spark plug(s).
7. Corroded, disconnected, or mis-connected wiring. (Mis-connected wiring after recent service).
8. Poor ground connections - be sure all are clean and tight.
9. Exhaust system restriction or improper exhaust.
10. Engine mechanical condition.

THROTTLE BODY FLOW SCREW AND IDLE STOP SCREW

DO NOT TAMPER WITH THESE SCREWS!

Throttle body flow and idle stop screws are factory pre-set. Throttle body must be replaced if screw setting is changed.

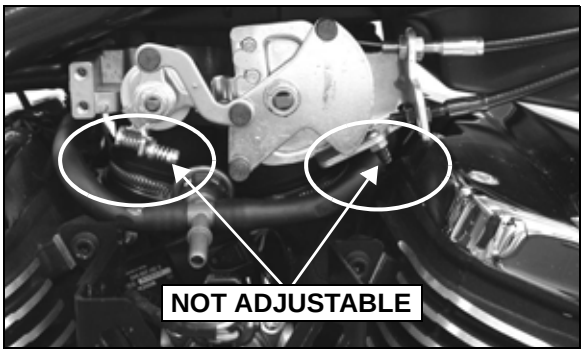

© 2009 Polaris Sales Inc.

SERVICE PRECAUTIONS

EFI SYSTEM PRECAUTIONS

NOTICE: While electronic fuel injection is very durable and reliable, the components can be easily damaged or problems can be introduced if the following precautions are not observed.

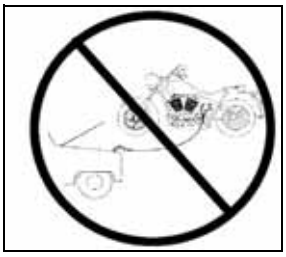

It is not advisable to “jump start” the machine with another battery. Although problems are unlikely to occur if everything is done carefully, the possibility of permanent damage to expensive electrical component exists.

Never disconnect the battery while the engine is running.

Pay special attention when connecting and disconnecting the battery cables. Refer to Chapter 16 for complete battery connection and charging information.

Before disconnecting or connecting electrical connections, be sure the key switch is off. An even better practice is to disconnect the battery when disconnecting or connecting electrical connections.

Fuses and circuit breakers protect critical electrical components and circuits. Investigate the cause, repair the problem, then replace the fuse. Never replace the fuse with a larger value fuse or “jumper” the fuse with wire, aluminum foil or any other means.

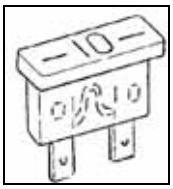

The ECM is a sensitive piece of electronic equipment. Dropping it or hitting it may cause irreparable damage. This is also true for sensors used in the system.

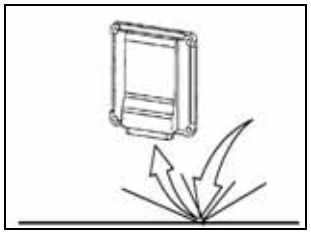

Do not drop or strike F.I. components

Static electricity can damage the ECM beyond repair. The human body can easily store enough static electricity to damage sensitive electronic components. Before working with any components of the Fuel Injection system, ground yourself to dissipate any static charge. Also take care not to touch any of terminal pins on the ECM.

Do not touch ECM connector pins

Anti-static wrist strap PV-43541

NOTICE: Some tests require probing of the ECM wiring harness connector. Do not touch or probe the exposed pins on the ECM. Static electricity from your body or the meter can easily damage the ECM.

Always use the proper adapter from the Connector Test Adapter Kit when probing the terminals. Most of the connectors are sealed and cannot be back probed. Be extremely careful not damage the connectors by forcing meter probes into the connectors.

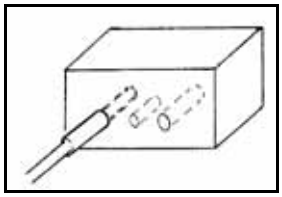

Use proper test adapters on connector pins

Connector test adapter kit PV-43536

Poor connections are the most common cause of Electronic Fuel Injection malfunctions. Inspect connector and wiring connections carefully during troubleshooting.

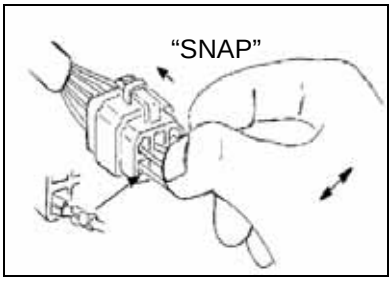

Carefully inspect connections of a failed circuit before doing any other troubleshooting steps. Wire terminals must be corrosion free and fully seated. Connectors should snap together and lock.

© 2009 Polaris Sales Inc.

FUEL SYSTEM ASSEMBLY VIEWS

FUEL TANK HOSE CONNECTION - 49 STATE MODELS

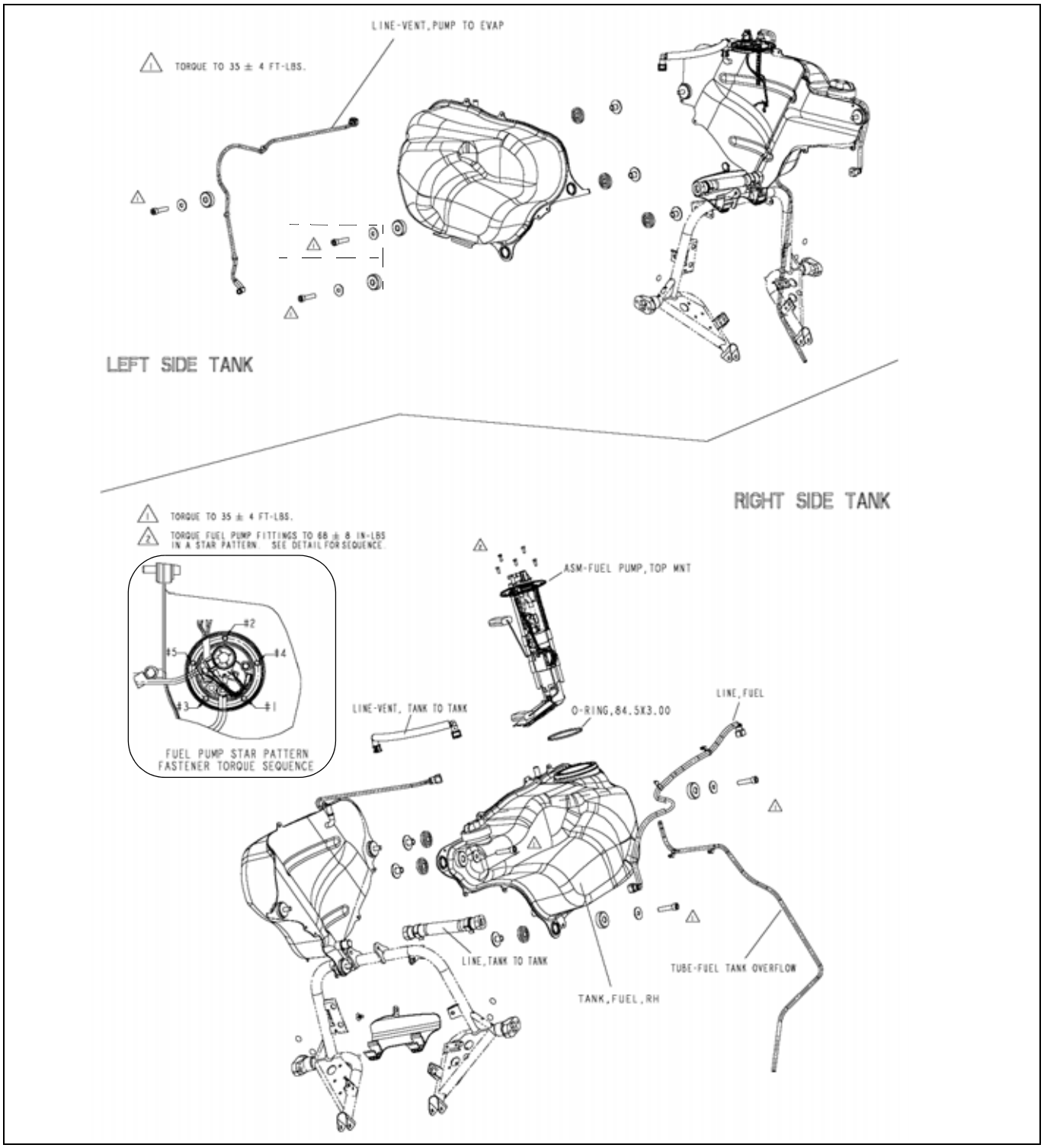

Over flow Drain Hose and Fuel Tank Vent Inspection - 49 State

1. Remove covers as required (Chapter 3) and disconnect hoses from fittings at right side of fuel tank.
2. Verify hose is clear between cap basin and hose termination point. Verify the vent is clear at each fuel tank.
3. The fuel pump / tank vent line is routed down the left side tank to the evaporator.

© 2009 Polaris Sales Inc.

FUEL TANK HOSE CONNECTION - CALIFORNIA MODELS

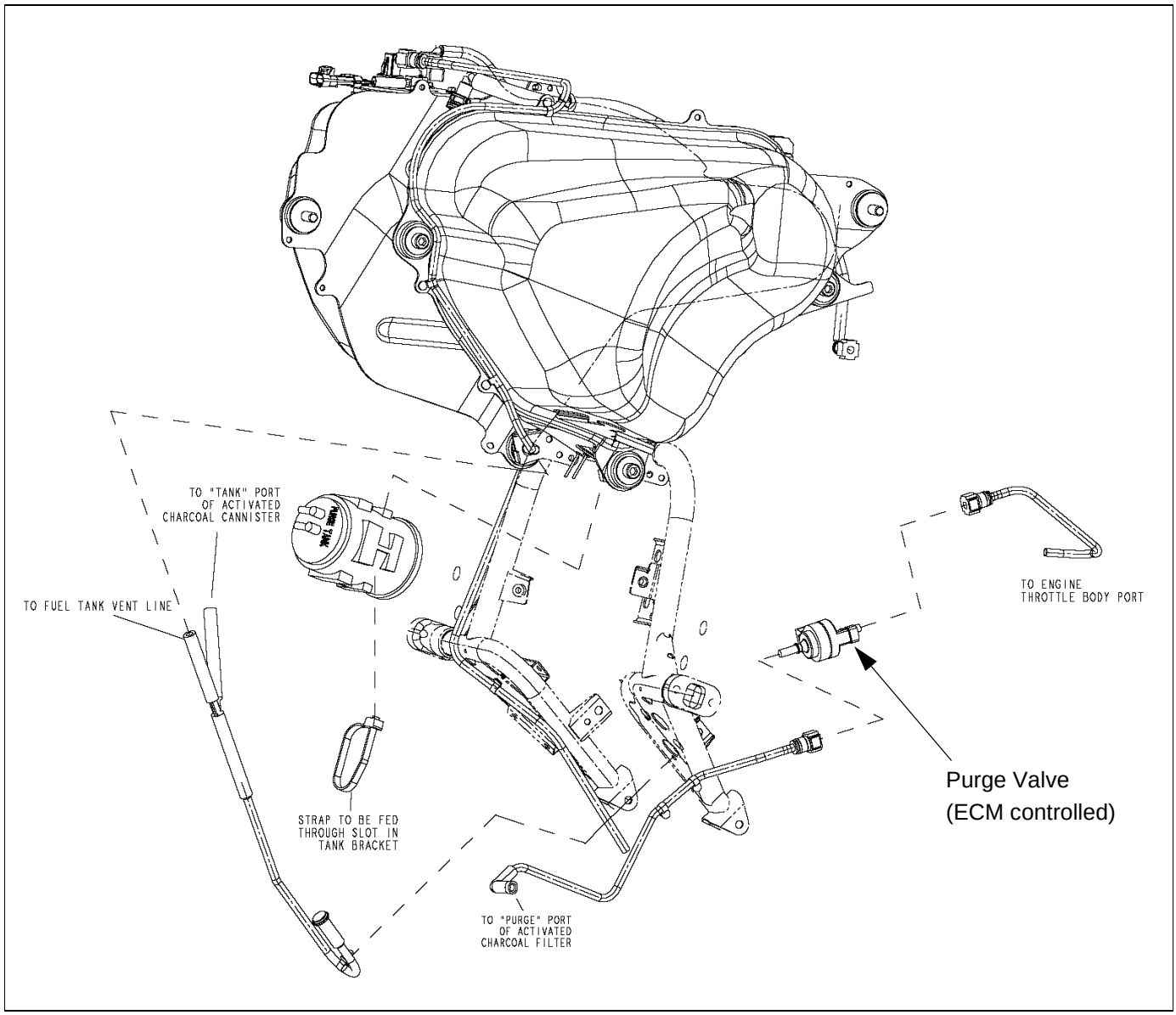

Tank Vent Inspection (California Models)

1. Remove covers as required (Chapter 3).
2. Open fuel cap.
3. Disconnect line from fitting on evaporative emissions canister marked “TANK”.
4. Pump low pressure air into canister end of vent hose. Verify air escapes from vent tube (right side). Be sure all hose connections are secure between canister and fuel tank fitting.

Overflow Drain Inspection

1. Remove covers as required (Chapter 3).
2. Open fuel cap.
3. Disconnect drain hose. Pump low pressure air into bottom of drain hose and listen for air escaping from drain hole on left side of fuel cap well.
4. Pump low pressure air into bottom of drain hose to check lower hose for obstruction.

© 2009 Polaris Sales Inc.

FUEL LEVEL SENSOR / FUEL PUMP / GAUGE TEST

FUEL PRESSURE: 3.50 BAR (350 kPa) (51 psi)
See page 5.20 for pressure test procedure.

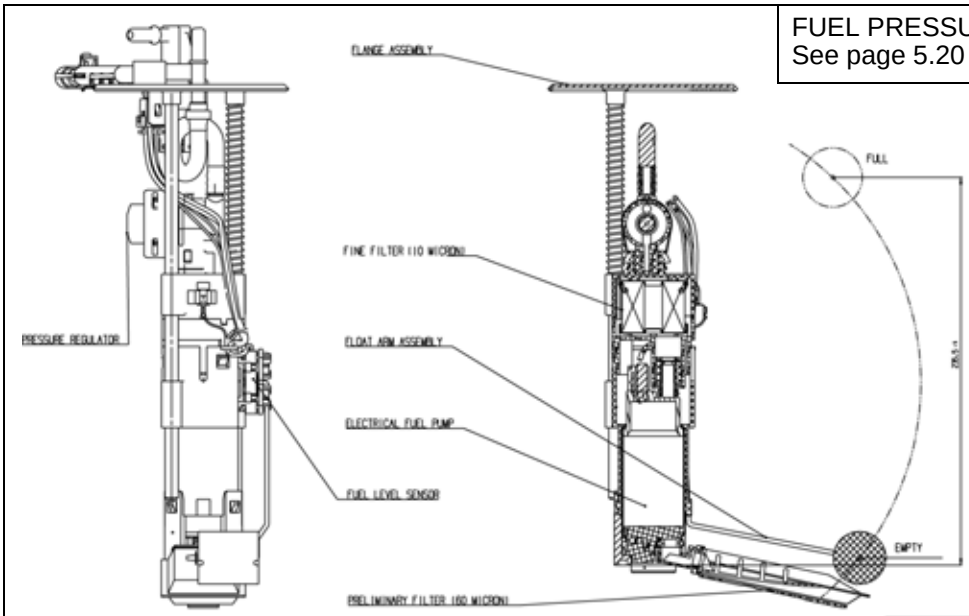

Fuel Level Sensor Resistance Test is on page 5.17.

FUEL LEVEL SENSOR RESISTANCE AND FLOAT BOTTOM HEIGHT CORRELATION

RESISTANCE (Ω)	250 ± 5	50 ± 3
FUEL INDICATOR	EMPTY	FULL

Fuel pump connector:

A.FUEL PUMP '+'	YELLOW/RED
B.FUEL PUMP '-'	BLACK/WHITE
C.FUEL LEVEL SENSOR '+'	BLACK
D.FUEL LEVEL SENSOR '-'	RED

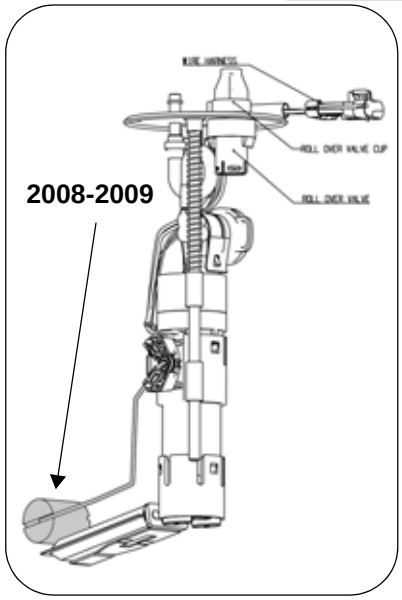

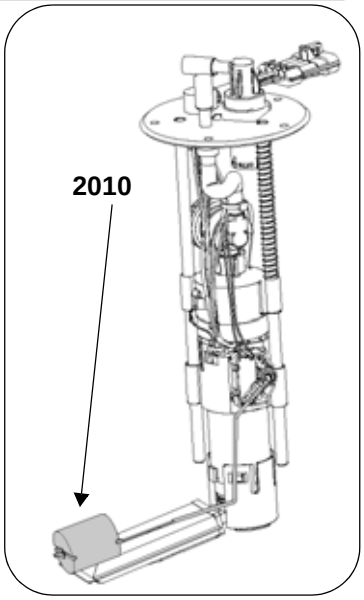

Main wire harness connector pins:

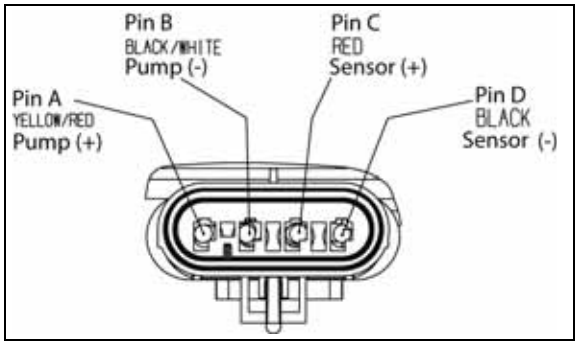

FUEL GAUGE TEST:
To test fuel gauge in the Instrument Cluster:

1. Remove windshield access panel and disconnect pump harness connector.
2. Connect a resistor with a value between 50 and 250 Ohms, across Pin C (BK/GN) and Pin D (BK/W) of the main harness connector.
3. Turn ignition key ON. Fuel gauge should indicate a fuel level based on the value of the resistor used.
   (Example: a 50 Ohm resistor should read in the FULL range).

© 2009 Polaris Sales Inc.

FUEL PUMP AND FUEL TANK ASSEMBLY VIEW

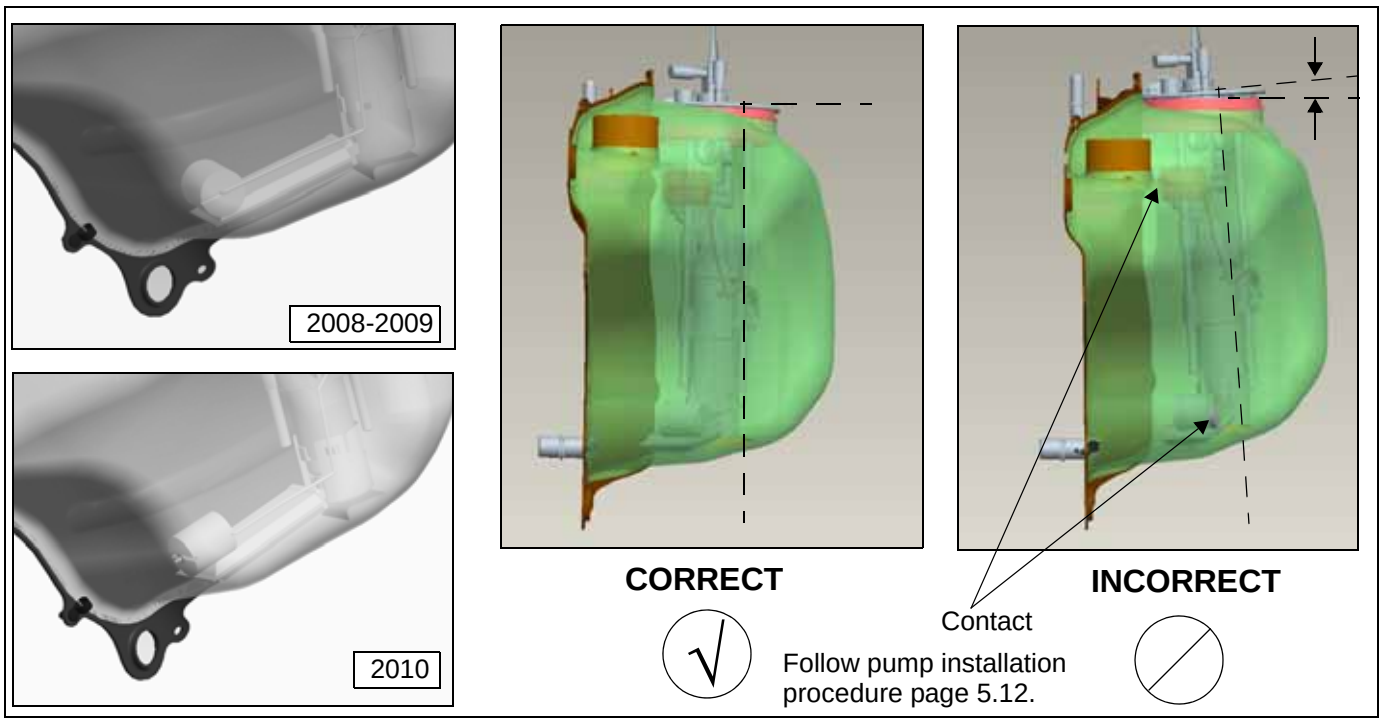

AIR INTAKE / BOX FRAME ASSEMBLY VIEW

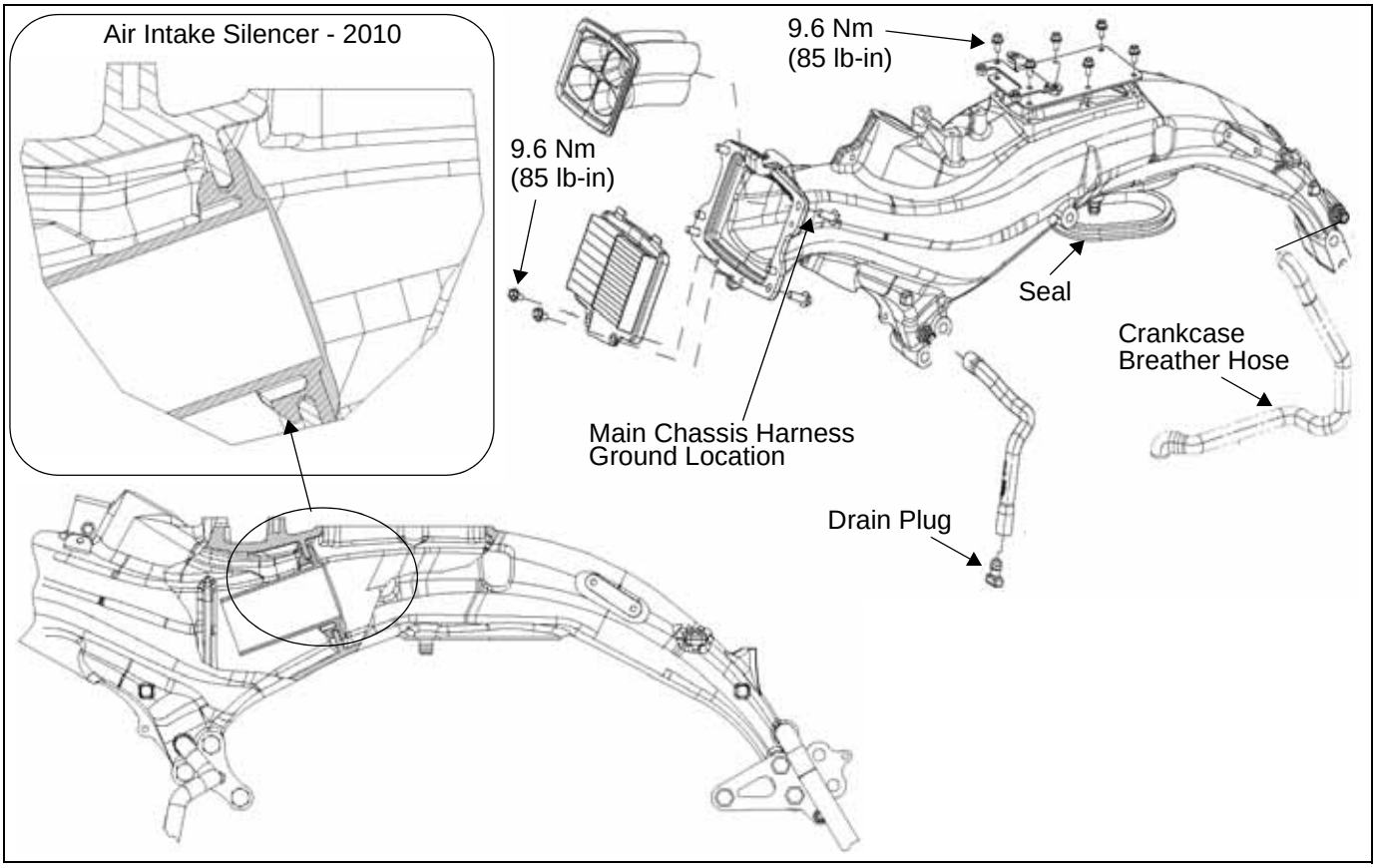

© 2009 Polaris Sales Inc.

IDLE AIR CONTROL ASSEMBLY VIEW

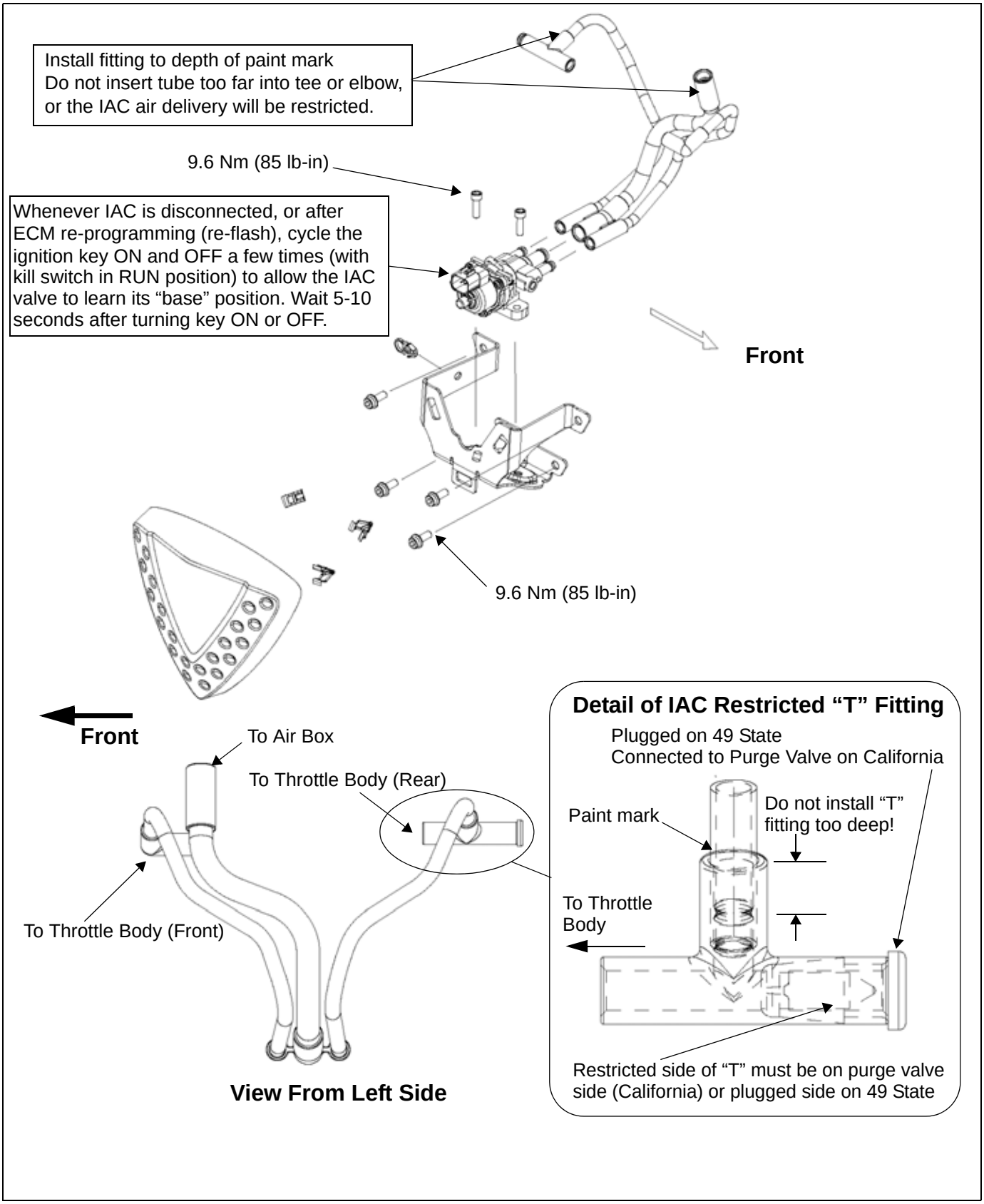

© 2009 Polaris Sales Inc.

FUEL SYSTEM SERVICE

FUEL SYSTEM DEPRESSURIZATION

WARNING

Allow engine and exhaust to cool completely before disconnecting fuel line or removing tank. Wear eye protection.

5. Wrap a clean shop towel around fuel line fitting.
6. Squeeze both release buttons (A) (one on each side of fitting) and hold; carefully slide fitting from fuel rail.

NOTE: The fuel line can also be removed from the fitting at the fuel tank end.

7. Cover fuel fittings to keep debris out of line.

PRIMING THE FUEL SYSTEM

Fuel pump prime procedure also serves to center the IAC valve. Prime procedure should be performed:

- If a new fuel pump is installed or if tanks are run completely dry.
- Whenever fuel system is serviced (fuel line is disconnected).
- Whenever battery or IAC is disconnected.

1. Fill the fuel tank.
2. Turn Engine Stop switch OFF.
3. Turn ignition key ON.
4. Turn stop switch to RUN.
5. Allow switch to remain in RUN position until pump stops running (about 2-3 seconds).
6. Turn stop switch OFF.
7. WAIT until the ECM centers the IAC valve (the clicking sound stops) and then *wait an additional 10 seconds.* or until you hear a faint single “click” from the relay.
8. Repeat Steps 4-7 about 5 times to complete the priming procedure.
9. Turn ignition key OFF when priming is complete.

NOTE: Fuel level in tank must be high enough to submerge pickup screen on the pump.

FUEL TANK VENT INSPECTION

1. Refer to page 5.6 (49 State) or 5.7 (California) for tank vent inspection and hose routing information.

FUEL PUMP REMOVAL

WARNING

Replace o-ring upon assembly. Review gasoline warnings on page 5.3.

1. Remove right fairing, and right speaker volume box. Refer to Chapter 3 for panel removal.
2. Lift tab (A) and separate the pump harness connector.

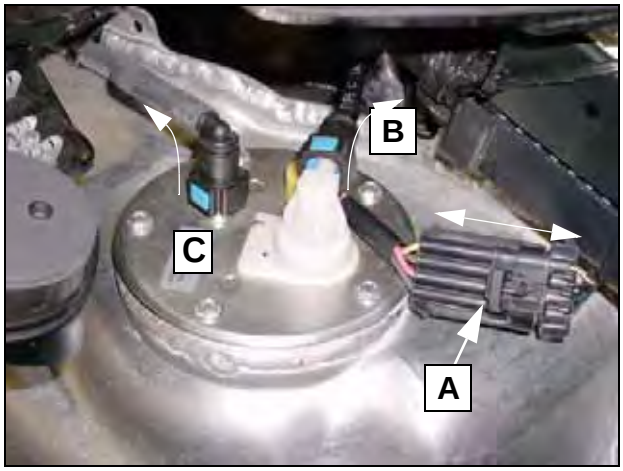

3. Remove fuel vent line from fitting (B). Note orientation of line on fitting for reassembly.
4. Remove fuel supply line from fitting (C). Note orientation of line on fitting for reassembly.
5. Remove all flange screws.

NOTE: Pump assembly is compressed. Spring pressure will force pump flange up.

© 2009 Polaris Sales Inc.

6. Carefully remove the pump from the tank by lifting and turning the assembly 180 degrees, then tilt the assembly forward and complete pump removal.

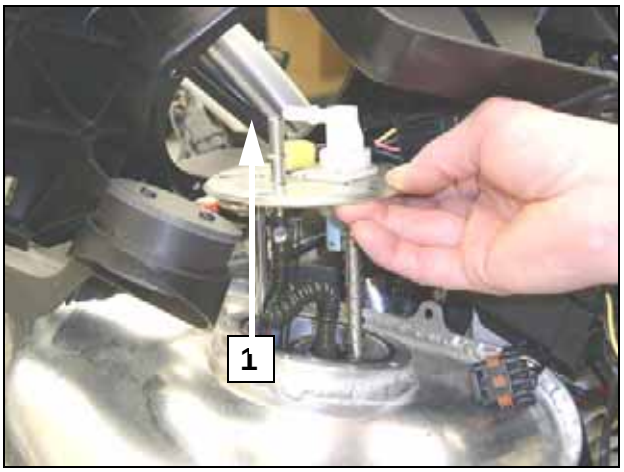

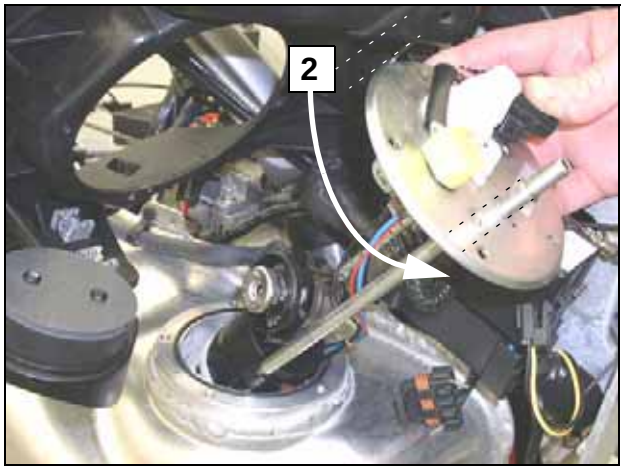

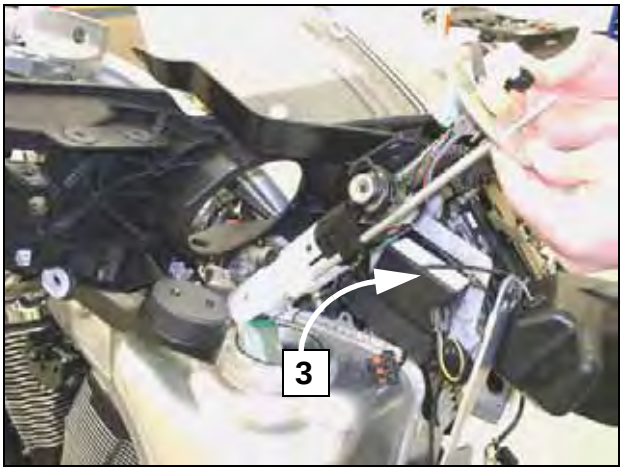

FUEL PUMP INSTALLATION

1. Prepare fuel tank for assembly by thoroughly cleaning inside the tank and all sealing surfaces, including the opening for the pump. Verify pump is ready for installation with a new sealing o-ring installed. See “FUEL SYSTEM ASSEMBLY VIEWS” on page 5.6

2. Be sure rubber o-ring (A) is installed as shown, under the pump mount flange.

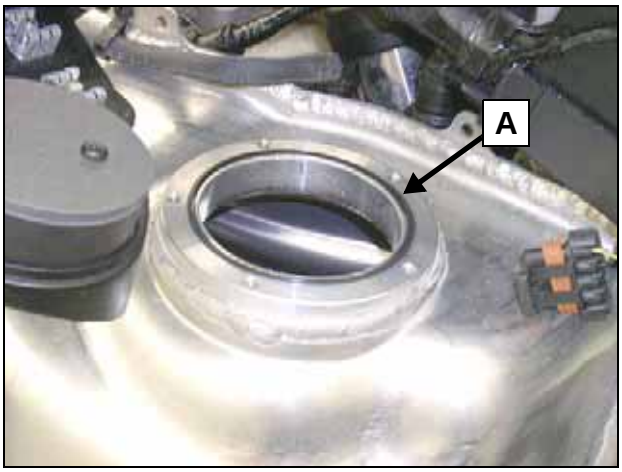

3. Carefully install the pump by compressing the pump assembly with your hands. With the fuel pick-up and float pointed forward, tilt the assembly and insert the pump into the tank. Once the pick-up and float assembly clear the inside tank wall, rotate the pump 180 degrees to it’s final position and finish pump installation.

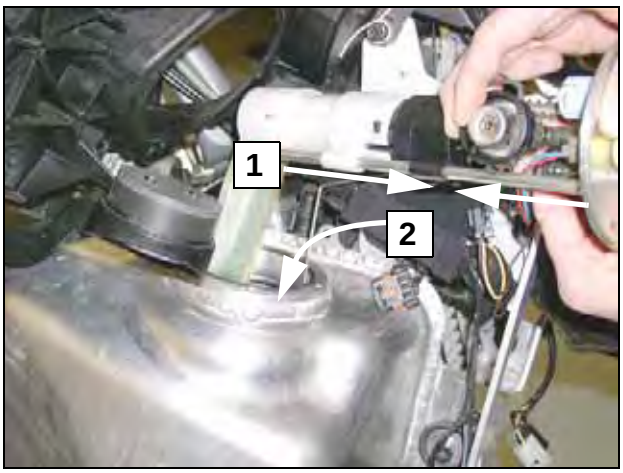

(Cont.)

© 2009 Polaris Sales Inc.

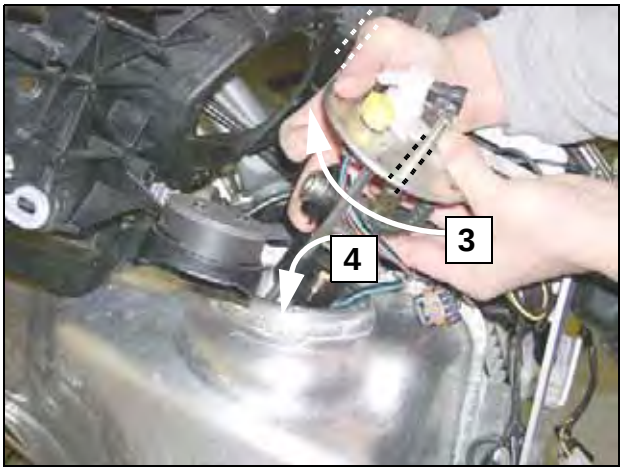

4. IMPORTANT - To verify that float is free, lift pump assembly up and move float arm with your finger inside the tank. If arm does not move freely it may be caught under the filter sock. Remove pump, free the float arm and re-install.

5. Compress the pump flange against the tank and o-ring. If the flange lays *completely flat*, re-verify the o-ring is in place and install the flange screws. Torque to specification using the torque pattern as shown. *DO NOT install or torque the flange screws until the pump flange is seated completely flat on the tank.*

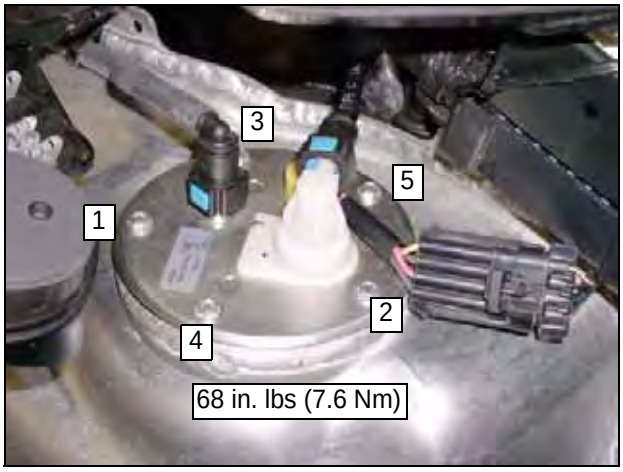

6. Install harness connector (A), vent line (B) and supply line (C).

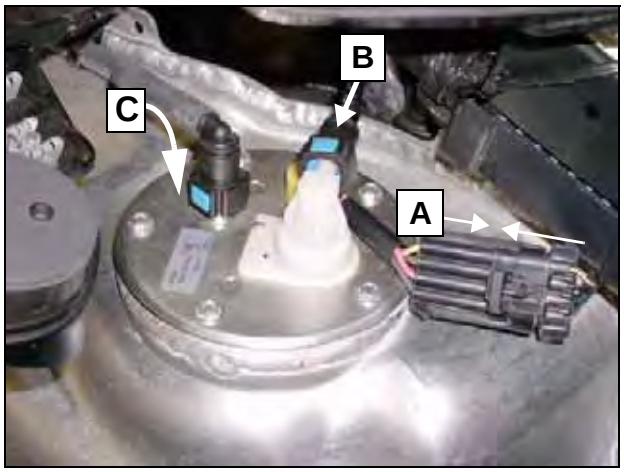

© 2009 Polaris Sales Inc.

FUEL TANK ASSEMBLY VIEW

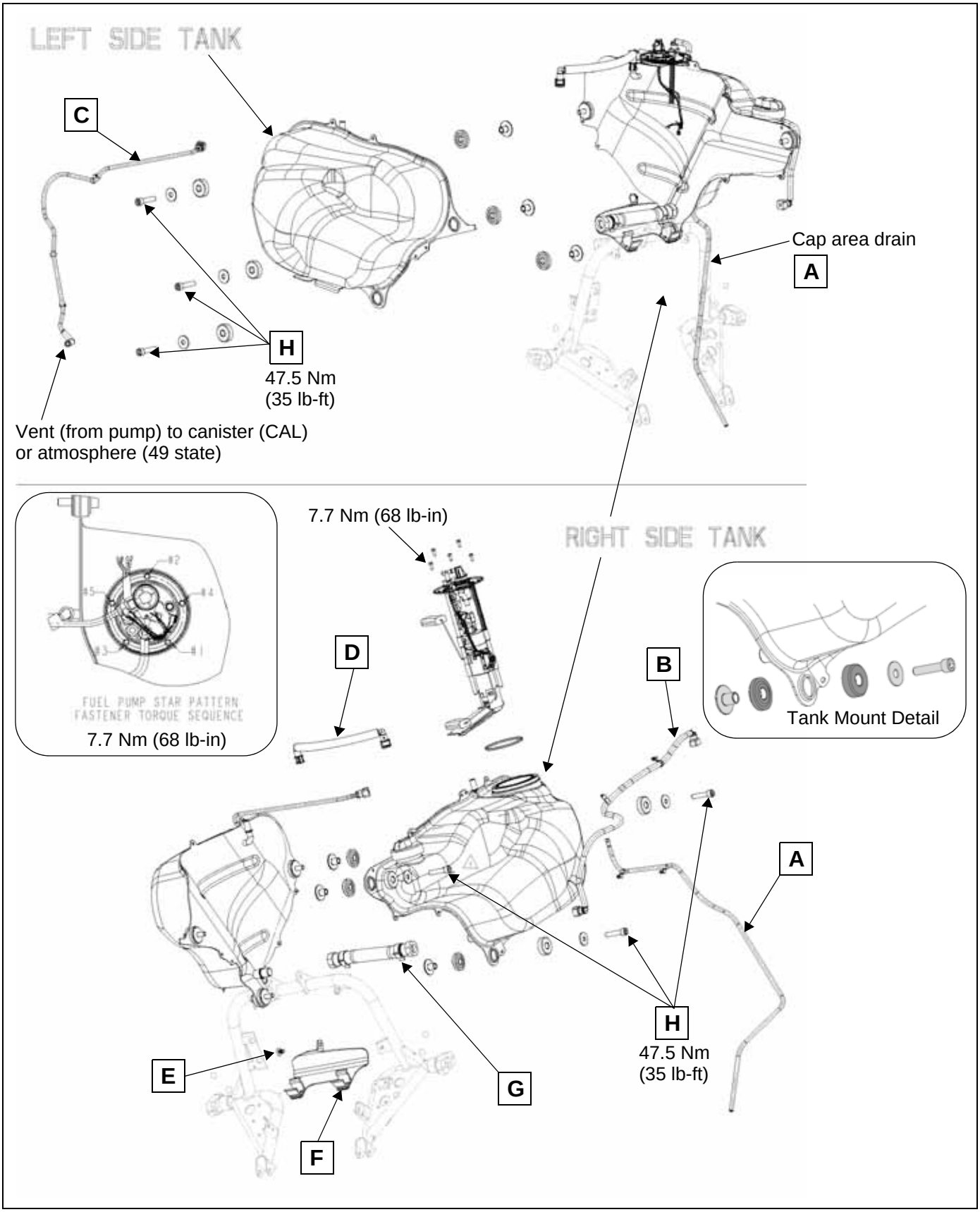

© 2009 Polaris Sales Inc.

FUEL TANK REMOVAL

Refer to Fuel Tank Assembly View on page 5.14.

WARNING

Review gasoline warnings on page 5.3. Allow engine and exhaust to cool completely before disconnecting fuels line or removing tank. Drain fuel tanks as completely as possible before performing removal.

1. Draw fuel from RH tank through the cap opening using a pump designed for fuel transfer. Follow all safety precautions specified by the manufacturer and all fuel handling precautions in this chapter. Lean motorcycle toward right side to allow fuel from left tank to transfer to the right when draining.
2. Remove fuel tank covers (page 3.21).
3. Remove side covers (page 3.27).
4. Depressurize fuel system (page 5.11).
5. Disconnect drain hose (A) from fuel cap basin (not required for tank removal).
6. Disconnect fuel pump / level sensor wire harness.
7. Disconnect fuel supply line (B) and vent line (C) from fuel pump.
8. Disconnect tank vent line (D) from RIGHT tank.
9. Remove rivet (E) and pull hose shield (F) to remove.
10. Disconnect one end of tank-to-tank crossover line (G).
11. Remove two of the three mounting bolts (H) from tank to be removed. Leave one bolt loosely in place.
12. Position front wheel straight ahead to gain adequate clearance for tank removal, remove last bolt and tank.
13. Clean up any fuel spills immediately.
14. Remove remaining tank.

FUEL TANK INSTALLATION

1. Assemble grommets and stepped spacers to LEFT tank mount holes. See Mount Detail on page 5.14.
2. Install crossover hose (G) securely on LEFT tank. You should hear an audible CLICK when hose fitting is fully seated on fitting.
3. Position front wheel straight ahead to gain adequate clearance for tank installation.
4. Install LEFT tank. Verify spacers and grommets are still in place on tank mounts and install all mount bolts (H) with washers.
5. Torque LEFT tank mount bolts to 47.5 Nm (35 lb-ft).
6. Route and attach vent line (D) to LEFT tank. Be sure it is secured fully onto the fitting with an audible CLICK.
7. Assemble grommets and stepped spacers to RIGHT tank mount holes. See Mount Detail on page 5.14.
8. Have mounting bolts accessible for installation. DO NOT support weight of tank with crossover hose after connecting the hose in the next step.
9. Install RIGHT tank to frame, guiding crossover hose onto lower fitting. Push bottom of tank inward firmly until crossover hose is fully seated on fitting, listening for an audible CLICK.
10. Verify spacers and grommets are still in place on tank mounts and install all mount bolts (H) with washers.
11. Torque RIGHT tank mount bolts to 47.5 Nm (35 lb-ft).
12. Attach vent line (D) to RIGHT tank fitting. Be sure it is secured fully onto the fitting with an audible CLICK.
13. Install crossover hose shield (F), engaging clips of shield to bar of support frame. Align hole of shield with hole in main frame and install rivet (E).
14. Connect wire harness to fuel pump.
15. Connect vent line (C) to fuel pump.
16. Route and connect fuel supply line (B) to pump and rail.
17. Connect drain hose (A, if removed) to fuel cap basin.
18. Refer to Chapter 3 for tank cover, panel, and side cover installation.
19. Add fuel to tank and check carefully for leaks.
20. Prime fuel system page 5.11.

© 2009 Polaris Sales Inc.

FUEL PUMP CIRCUIT DIAGRAM

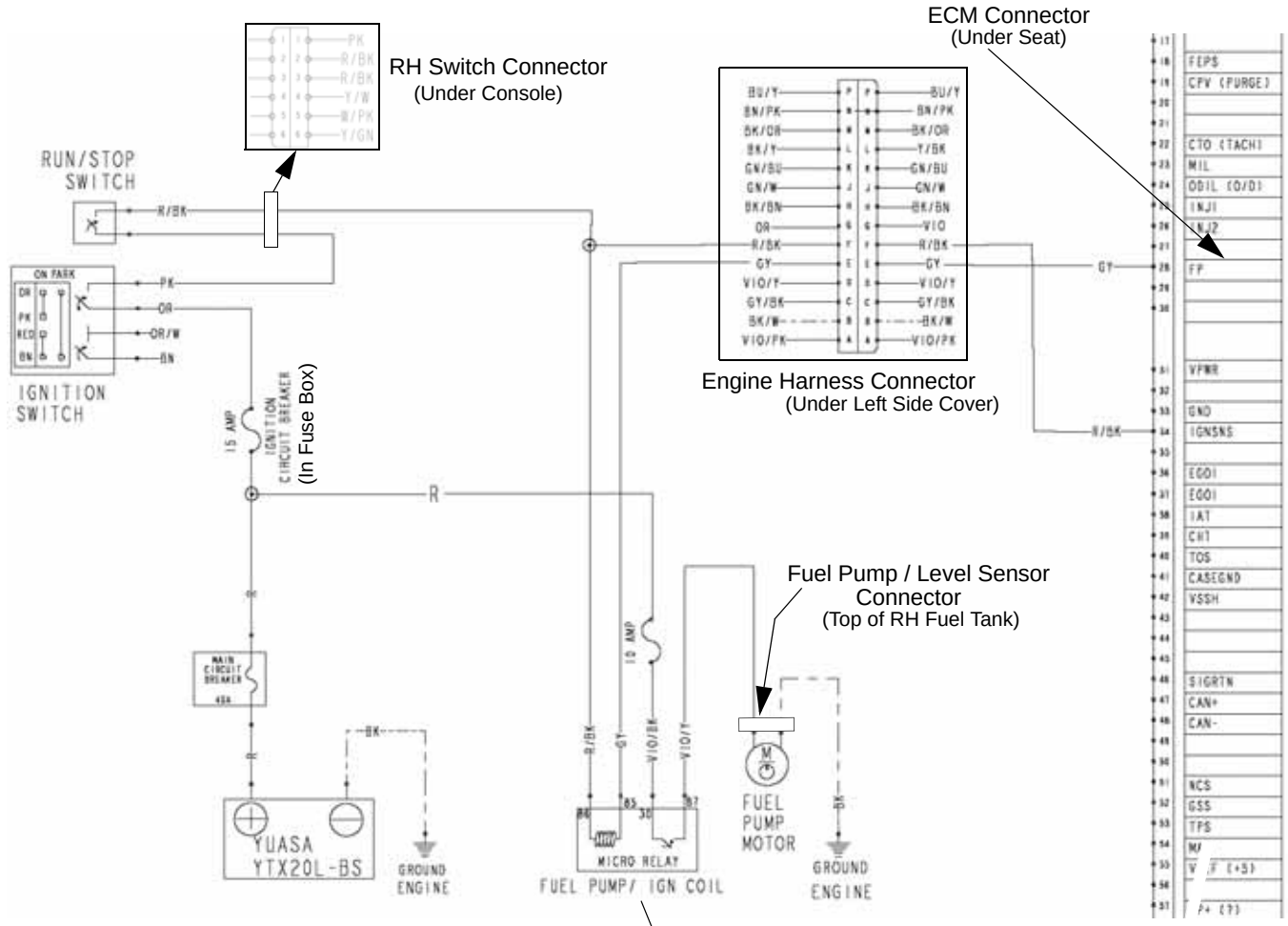

To test pump and wiring between tank and relay, perform a current draw test (page 5.19).

RIGHT SIDE FUSE BOX.
(Under Windshield Access Panel)

NOTE: Identical relays in fuse box can be swapped for test purposes.

© 2009 Polaris Sales Inc.

FUEL LEVEL SENSOR RESISTANCE TEST

OVERVIEW OF OPERATION: The fuel level sensor is a mechanical float arm located on the fuel pump inside the fuel tank. Circuit resistance determines the reading on the fuel gauge located on the instrument panel.

When the fuel level indicated on the fuel gauge is below 1/4 tank, a LOW FUEL warning icon lights up on the information display.

Follow the steps below to test the sensor circuit with an ohmmeter.

Main system connectors are located at the back of the instrument cluster and on top of the right fuel tank (at the fuel level sensor / fuel pump connector).

1. Remove the windshield access panel and right fairing (Chapter 3).
2. Disconnect the fuel level sensor / fuel pump connector located on top of the right fuel tank.
3. Set multimeter to measure resistance.

4. Attach the meter leads to pin C and pin D of the 4- pin connector out of the fuel pump. Estimate the fuel level in the tank and compare resistance reading to the table below.

Resistance Measured From Pin C to Pin D in 4-Pin Connector	Approximate Resistance
Sensor Resistance (Room Temperature)	FULL (Sensor Arm Up) 50 Ω +/- 3 Ω
	EMPTY (Sensor Arm Down) 250 Ω +/- 5 Ω

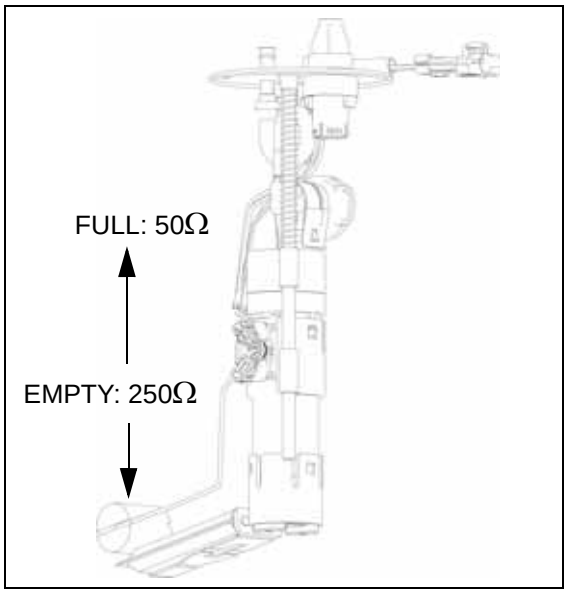

FUEL LEVEL GUAGE

Refer to page 5.8 for Fuel Level Gauge test. Refer to Chapter 19 for Instrument Cluster information.

© 2009 Polaris Sales Inc.

FUEL PUMP ELECTRICAL DIAGNOSTICS

FUEL SYSTEM	
Fuel Pump Pressure	3.50 BAR (350 kPa) (51 psi)
Fuel Pump Volume	60-80 liters/hr @ 12VDC
Fuel Pump Current Draw	Less than 5 amps @ 12.0 VDC

NOTE: When ignition switch is turned ON and Engine Stop switch is in the RUN position, fuel pump will run momentarily (about 2-3 seconds). Key or Engine Stop switch must be turned *OFF for at least 5 seconds* (there may be an audible click as the relay re-sets) before fuel pump will cycle again. Fuel pump will not cycle again if switch is turned on and off too quickly.

FUEL PUMP SUPPLY VOLTAGE TEST

1. Disconnect fuel pump / level sensor harness.page 5.17.
2. Set meter to DCV. Connect red meter lead (+) to pin A (on wire harness side of connector) and black (-) meter lead to pin B (ground).

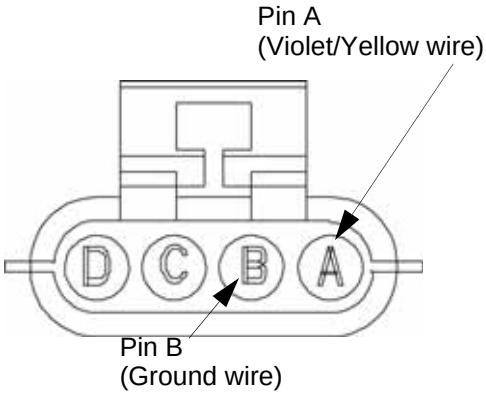

Fuel Pump Connector (Main Harness Side)

3. Turn Engine Stop switch to RUN.
4. Turn ignition key ON and read DC voltage on meter when key is first turned on. Voltage reading on pin A (Violet/Yellow) should be equal to battery voltage for 2-3 seconds after turning key ON.
5. If low or no voltage is delivered to the fuel pump, verify ground wire (Pin B, Black) has good continuity to battery (-) post. If ground is OK, check Gray wire from fuel pump relay the Engine-Chassis harness connector (under left side cover) and from there to ECM pin #28. This Gray wire receives a momentary ground from the ECM (for 2-3 seconds) and activates the fuel pump relay which supplies power to the pump on the VIO/Y wire. Trace the power and ground circuits to determine fault if battery voltage is not present for 2-3 seconds.

BATTERY VOLTAGE NOT REACHING FUEL PUMP

1. Check fuel pump / ignition fuse. If open (blown) visually inspect circuit wiring for shorts to ground and then perform fuel pump current draw test on page 5.19.
2. If fuse is OK, remove fuel pump relay and check for battery voltage on the Orange wire (relay terminal 30). If power is present, carefully connect a jumper wire *diagonally* across the fuel pump relay contacts from terminal 30 to terminal 87 (OR to VIO/Y).

⚠ CAUTION

DO NOT apply battery power to terminal 85 of the relay (Gray wire) or ECM damage will result!

3. If pump runs when powered directly in Step 2, swap fuel pump relay with another identical relay, turn ignition key ON and cycle key/stop switch to test. If pump runs when key/kill switch is cycled replace faulty relay. Wait at least 30 seconds with key OFF before repeating the test.
4. If pump does not run with relay swapped and key / stop switch cycled (but ran in Step 2) check for battery voltage on Red/Black wire (terminal 86) at pump relay.
5. If there is no battery voltage on terminal 86 (with ignition key ON and Engine Stop switch to RUN) refer to the wiring schematic to trace power path through ignition switch and Engine Stop switch (Orange to Pink, and Pink to Black / Red leading to relay.

(Cont.)

© 2009 Polaris Sales Inc.

BATTERY POWER TO FUEL PUMP (Cont.)

6. If there is battery voltage on terminal 86, check continuity on gray wire from fuel pump relay (terminal 85) to Engine Harness Connector pin E, and from pin E to ECM pin 28 in ECM connector. The ECM grounds the pump relay through ECM pin 28 for 2-3 seconds when key switch and stop switch are first turned ON. The ECM maintains this ground connection after engine start-up. Ground Gray wire to bypass ECM ground.

FUEL PUMP CURRENT DRAW TEST

OVERVIEW OF TEST: Fuel pump current draw is a good indicator of fuel pump condition. Perform the following test if fuel pump operation is suspect, or if fuel pump fuse is found to be open (blown).

⚠ CAUTION

DO NOT apply battery power to terminal 85 of the relay (Gray wire) or ECM damage will result!

NOTE: When meter leads are inserted the pump will run, and current draw will be displayed on the meter, even with key and stop switch off. Fuel tank must have enough fuel in it to cover the fuel pickup screen for an accurate test.

1. Remove the windshield access panel and right fuse box cover.
2. Remove fuel pump relay (A) by pulling straight upward.

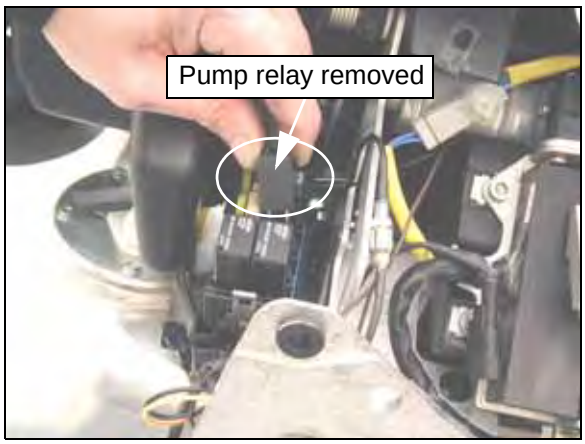

3. Set meter to DC Amps. Be sure red meter lead is inserted in AMP 10A jack, and black meter lead is in common (-) jack.
4. Insert one meter lead in pin socket (30) and other meter lead in pin socket (87) of relay block. These terminals are the farthest apart diagonally in the relay socket.

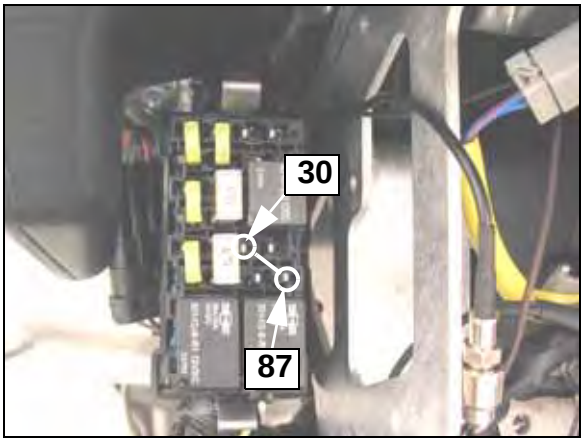

5. Read fuel pump current draw on meter and compare to specification.

6. Inspect fuel pump circuit wiring or replace fuel pump if current draw exceeds specification.

SPECIFICATION: Fuel Pump Current Draw
Maximum: 5 DC Amps

© 2009 Polaris Sales Inc.

FUEL PUMP PRESSURE INSPECTION

WARNING

GASOLINE

Gasoline is extremely flammable and is explosive under certain conditions. Work in a well ventilated area. Open flames, sparks and cigarettes must be kept away from gasoline. KEEP GASOLINE OUT OF THE REACH OF CHILDREN!

CAUTION

Wear safety glasses or a face shield when working around the fuel system to protect your eyes.

1. Remove the cap from test fitting and attach fuel pressure gauge.

Fuel Pressure Gauge: PU-43506-A

2. Start engine and record fuel pressure (or cycle ignition key and Engine Stop switch to read pressure when pump cycles for 2-3 seconds).

Fuel pressure 3.50 BAR (350 kPa) (51 psi)

3. Turn ignition switch off. Disconnect gauge and install cap on fitting. Start engine and inspect for fuel leaks.

FUEL PRESSURE TROUBLESHOOTING	
FUEL PRESSURE TOO LOW: INSPECT	**FUEL PRESSURE TOO HIGH: INSPECT**
Low fuel level (add fuel) Pump not running (Fuel pump or circuit malfunction) Restricted fitting, fuel supply line, or gauge adapter hose Fuel line kinked or restricted (from tank fitting to rail) Fuel line leaking (leaking air in or fuel out) Vent restriction Plugged fuel filter (located in fuel tank) Pressure regulator malfunction (located on pump in fuel tank) Fuel pump malfunction (Pump should run for about 2 seconds the instant that the key switch and Engine Stop switch are turned ON.	Plugged fuel return (in tank on pressure regulator) Pressure regulator malfunction (located on pump in fuel tank).

© 2009 Polaris Sales Inc.

IDLE AIR CONTROL REMOVAL

Also refer to IAC Assembly View on page 5.10.

1. Remove RH cover and IAC cover (page 3.6).
2. Remove wire dart (A).
3. Push tab (B) to disconnect IAC harness.
4. Remove (4) IAC bracket screws (C) using a 5mm ball drive hexagonal socket.

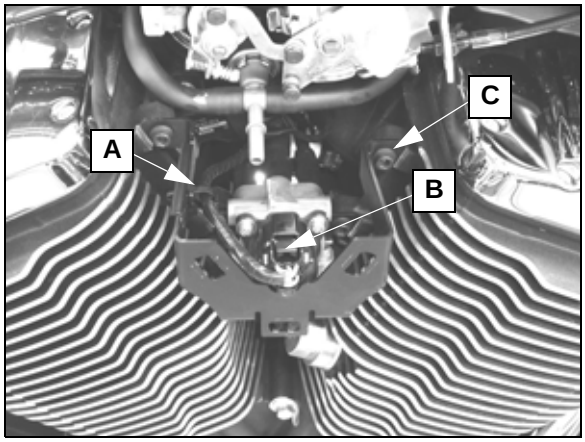

5. Remove high tension leads from coils.

NOTE: The front HTL is routed *behind* the ignition switch cover, not above it upon assembly.

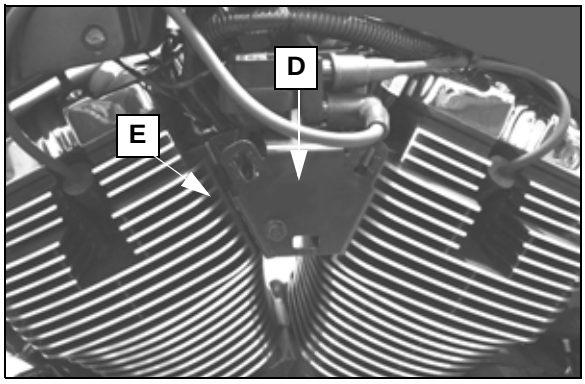

6. Remove (4) screws (E) at the corners of the bracket with a 5mm ball drive hexagonal socket.
7. Disconnect primary wire harness from coil.

8. Push tab on ignition switch connector and remove bracket with switch attached.
9. Remove air supply hose from air box, the front air delivery hose, and the rear air hose with “T” fitting from throttle body.

NOTE: Restricted side of tee fitting faces purge valve on California models. On 49 state models, the restricted side of the tee fitting is plugged (F).

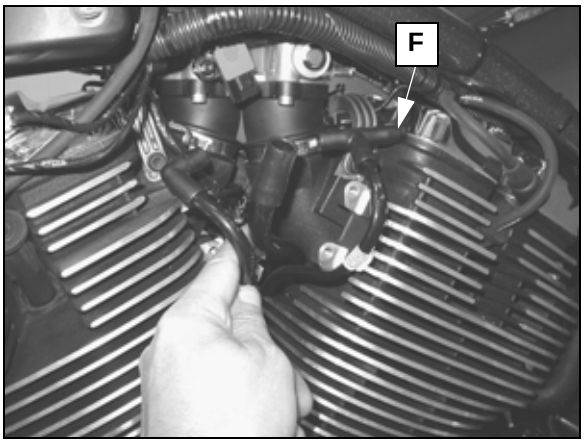

© 2009 Polaris Sales Inc.

EFI SYSTEM COMPONENTS

FUEL INJECTION COMPONENT LOCATIONS

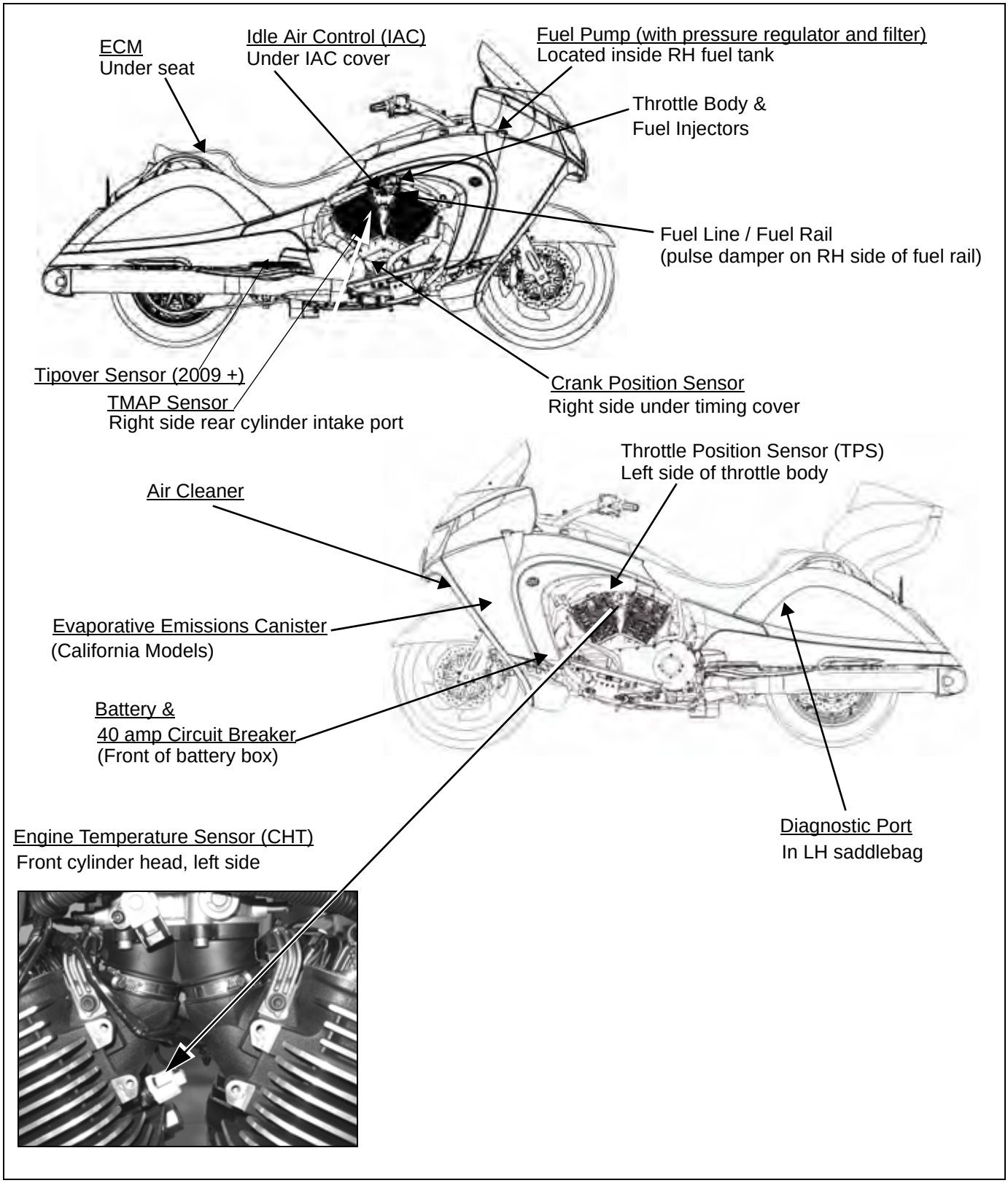

© 2009 Polaris Sales Inc.

FUEL RAIL / FUEL INJECTOR REMOVAL

1. Remove leg fairings (page 3.12).
2. Remove ignition coil with bracket (page 17.12) and IAC bracket assembly with hoses (page 5.21).
3. Remove fuel rail screws (A) and four intake manifold screws (B).

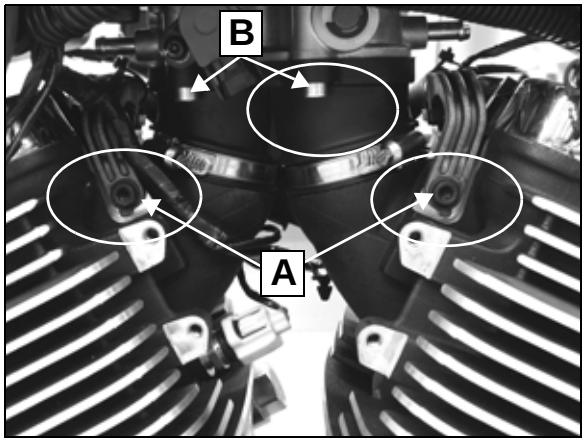

4. Remove throttle cables and cruise control cable.
5. Push throttle body and air box seal up into frame to provide as much clearance as possible for injector removal.
6. Remove red lock tab from each injector harness connector.

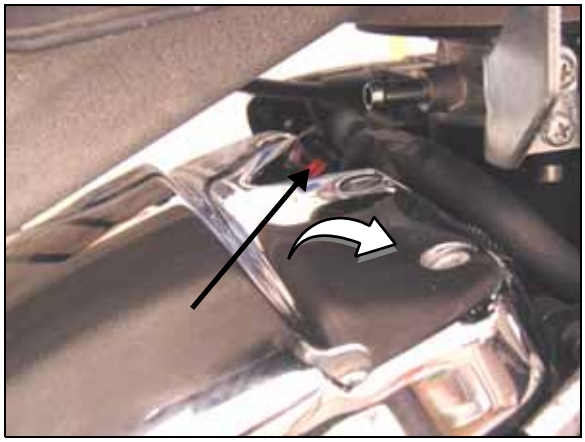

7. Press tab to remove harness from each injector.
8. Slide fuel rail retaining clip back until rail is released from injector, or remove them completely.
9. Lift fuel rail off injectors and remove rail from the right side.
10. Cover the ends of injectors and fuel rail with plastic wrap to prevent contamination.
11. Clean the area around injectors with compressed air to prevent foreign material from entering the engine. Pull injectors out of cylinder heads, keeping them in order (front and rear) for assembly.

FUEL RAIL INSTALLATION

1. Install new O-rings on each injector and lubricate with engine oil. (Note: Service O-rings are the same color and suitable for use on bottom and top of injector).
2. Install retainer clips fully onto each injector. Be sure clips are fully seated in the groove.
3. Install injectors in cylinder heads with rear connector facing straight rearward and front facing straight forward. Press firmly to seat. Remove protective cover.

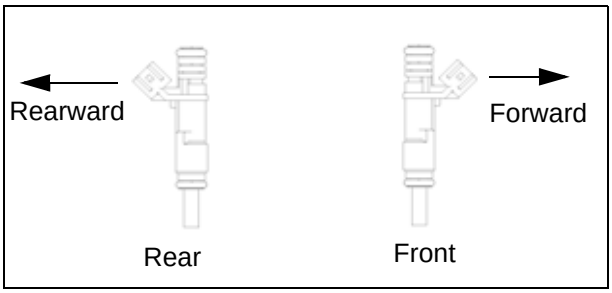

4. Install fuel rail and place in position on top of injectors. Press rail over each injectors evenly until retaining clips “click” into place on the rail. Be sure rail is seated completely and clips are engaged in the groove.

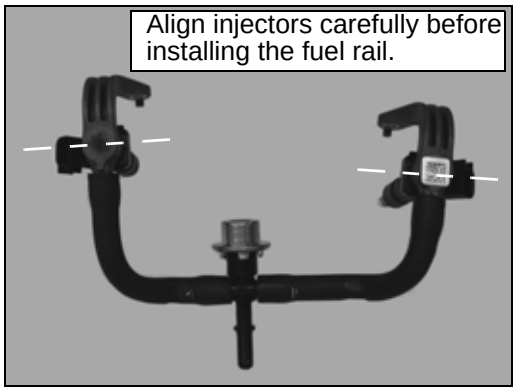

5. Install fuel rail retaining screws and torque to 85 in. lbs. (10 Nm).
6. Install wire harness on each injector and then install the lock clips. Secure wires with new tie straps where any were removed.
7. Assemble remaining parts in reverse order and prime the fuel system (page 5.11).

© 2009 Polaris Sales Inc.

FUEL INJECTION SYSTEM TESTING AND DIAGNOSTICS

FUEL INJECTION SYSTEM - OVERVIEW OF OPERATION

The Electronic Fuel Injection (EFI) system functions to provide the engine with precisely metered fuel under varying loads and conditions.

The Engine Control Module or "ECM", is located under the seat. It is programmed to provide the proper fuel and ignition timing based mainly on primary inputs of engine RPM and the Temperature and Manifold Absolute Pressure (TMAP) sensor inputs. The ECM evaluates other minor sensory information received from various sensors in the EFI system, and also provides grounds or voltage to other *EFI related* circuits of the electrical and fuel delivery systems.

A Throttle Position Sensor (TPS) is mounted on the left side of the throttle body. The TPS is not a primary input for air flow information in the closed loop system. It mainly provides "rate of change" feedback to the ECM (such as rapid acceleration) and also serves as a plausibility check for the TMAP sensor. The MAP portion of the TMAP sensor is the primary air flow and load sensing device.

An electric fuel pump, mounted inside the fuel tank supplies fuel pressure to the injectors continuously when the engine is running or cranking. A pressure regulator incorporated on the pump keeps fuel pressure steady at approximately 50 PSI (3.44 Bar). The fuel pump cycles "ON" for 2-3 seconds when the ignition key and Engine Stop switch are turned on to pressurize the system for start-up.

The fuel injectors inject fuel when they are grounded by drivers inside the ECM. The duration of the injector pulse (length of time the injector circuit is grounded) is controlled by the ECM. Pulse duration determines the amount of fuel delivered to the engine (longer cycles = more fuel). The ECM selects the correct amount of fuel injector cycle time by referencing a three dimensional fuel "map". Simplified, each reference point on the map represents a different amount of time.

Although TMAP and engine RPM are the most influential inputs for selecting a map reference point, the ECM also evaluates feedback from minor sensors in the system, to obtain a more accurate "picture" of the fuel needs at any given moment.

The locations of sensors and other EFI system related components is shown on page 5.22.

IDLE AIR CONTROL (IAC) - OVERVIEW OF OPERATION

The Idle Air Control system consists of the Engine Control Module (ECM), IAC valve, air supply hose, two air delivery hoses, and related wiring between ECM and IAC valve. (See IAC Assembly View on page 5.10).

The IAC valve is located behind the triangular cover on the right side of the throttle body. Its main function is to stabilize the engine's base idle speed by varying the amount of air allowed to the engine when the throttle plates are closed. The air is regulated by main and trim valves located inside the IAC valve body.

The ECM continuously monitors engine RPM, and changes the position of IAC air valves (via step motors) to maintain idle speed between (approx) 900-1000 RPM.

Filtered air from the air box is delivered to the IAC valve body through a supply hose on the lower left side of the air box, then distributed to front and rear cylinder throttle bodies through separate delivery hoses.

IAC CYCLING - Whenever the IAC wire harness is disconnected, or after ECM re-programming (re-flash) cycle the key switch on and off so the IAC valve can "learn" its position. Wait 5 seconds after turning the key ON. The system requires no scheduled maintenance beyond visual inspection to ensure all hoses and electrical connections are tight. NEVER attempt to "adjust" idle speed with the throttle stop screw or flow balance screw located on the throttle body. These screws are factory pre-set. Any tampering will require throttle body replacement.

SELF-DIAGNOSTIC FEATURE

The ECM used on the Victory motorcycle stores trouble codes in memory. Trouble codes are stored by the ECM when a sensor reading is outside of the normal or "plausible" range. These codes are listed and described on page 5.27. The ECM is located under the seat.

When a fault occurs, the ECM records a code in the "Logged Faults" memory. If a fault is currently active, the code is also recorded in the ECM "Current Faults" memory and remains until the fault is no longer occurring. If the problem is corrected, the "Current Fault" is erased, but the code remains in the "Logged Faults" memory until it is manually deleted (cleared) using Digital Wrench™ software. Logged faults remain even if the battery power is removed from the ECM.

Digital Wrench™ diagnostic software is the tool used to interface with the EFI system by coupling to a diagnostic port located under the left saddlebag door. Whenever available, Digital Wrench™ should always be connected to a vehicle for more accurate problem diagnosis.

© 2009 Polaris Sales Inc.

ECM CONNECTOR MAP

Refer to page 5.29 to remove connector from ECM.

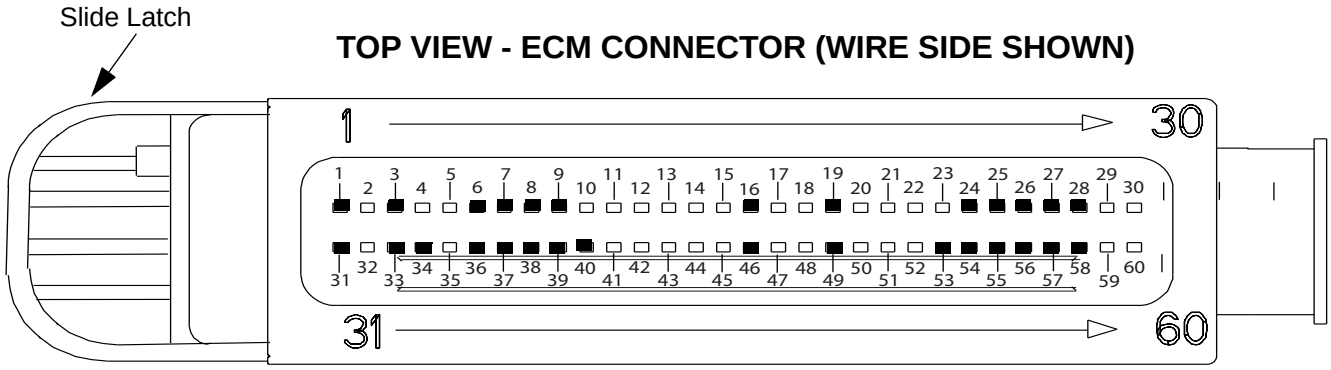

Note: Touch pins with probes, do not force probe into connector pin.

FUEL SYSTEM RELATED ECM CONNECTOR MAP
(System related wire color & pin number shown. Refer to wiring diagram for complete connector diagram).
Some open pin connector positions are included for clarity.

1	3	6	7	8	9		16	19	23	24	25	26	27	28
VIO/PK VPWR	W / BK #2 IGN COIL PWR	BU / PK IAC STEPPER MOTOR 1	BU / W IAC STEPPER MOTOR 2	BU / OR IAC STEPPER MOTOR 3	BU / R IAC STEPPER MOTOR 4		OPEN	BU CANIST PURGE VALVE		OPEN	W / BU INJECTOR 1	W / GY INJECTOR 2	OPEN	GY FUEL PUMP RELAY GROUND ECM CONTROLLED

BN = Brown; GN = Green; BK = Black; GY = Gray; PK = Pink; R = Red; VIO = Violet; W = White; Y=Yellow; OR = Orange; BU = Blue

31	33	36	37	38	39	40	46	49	53	54	55	56	57	58
VIO/PK VPWR	BK / W ECM GROUND	GY / R #1 (FRONT) O 2 SENSOR	GY / BU #2 (REAR) O 2 SENSOR	OR / GN INTAKE AIR TEMP	OR / BU CYLINDER HEAD TEMP	OR / W TIPOVER SENSOR (2009)	BN / BU SIGNAL RETURN	OPEN	OR / Y TPS	OR / BN MAP	BN / R +5 REFERENCE VOLTS	OPEN	R CPS +	BK CPS -

VERIFY TERMINAL PINS ARE NOT LOOSE IN CONNECTOR AND WIRE CONNECTION TO TERMINAL PIN IS SECURE.

CHASSIS TO ENGINE HARNESS CONNECTOR (14 PIN)

Some sensor tests refer to the Engine Harness Connector (A) located behind the left side cover.

Read ECM CONNECTOR REMOVAL procedure on page 5.31 before attempting to remove the ECM connector.

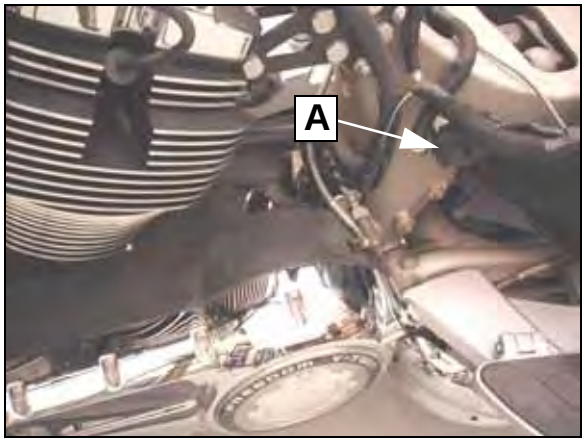

© 2009 Polaris Sales Inc.

VIEWING AND CLEARING TROUBLE CODES

Trouble codes are logged in the ECM memory when a sensor or other supported system fault occurs. To view the codes, do the following:

Viewing Trouble Codes

1. Connect the Digital Wrench™ diagnostic software and establish communication with the ECM.
2. Select the icon to display loaded trouble code(s).
3. The codes are classified as *Current or Historical*. Current codes are occurring at the moment. Historical codes are not occurring at the moment but have occurred in the past. A list of codes is on page 5.27.

Clearing Trouble Codes

4. Click on the "*Clear Trouble Codes*" icon to clear trouble codes.

SENSOR DIAGNOSTICS - IMPORTANT INFORMATION TO UNDERSTAND BEFORE YOU BEGIN

If a sensor fails or reads outside a "normal" range, a "pre-programmed" (default) value is substituted by the ECM until sensor reading returns to normal.

Sensor values can be viewed in Digital Wrench™ on the "Sensor Data Grid Or Graphs" screen. HOWEVER, the sensor reading may be actual feedback from the sensor, or it may be the default value set by the ECM in the event of a fault in the sensor or wiring.

The check engine ("ENG") warning may or may not illuminate to alert the rider of a possible problem, depending on the system fault. Following a check engine light, perform a visual inspection to see if a cause can be determined.

Connect the Digital Wrench™ to see what codes are present in memory, and focus your diagnostics on that sensor and the related wiring for that circuit. (Refer to wiring diagrams for ENG light circuits.

If multiple codes are set, refer to the wiring diagram and focus your efforts on wiring and connections common to each of the sensors. Multiple sensor failure is extremely unlikely.

The sensor tests described in this section are performed at the ECM wire connector. This method ensures that the data from a sensor is reaching the ECM. Sensor tests can be performed at the sensor if easily accessible, but the wiring between the sensor and the 60 pin ECM connector should always be closely examined and tested if the sensor itself passes the test.

Poor or corroded connections are the most common cause of system faults. Always check the integrity of the male pins and female receptacles of the connectors in the affected circuit. These may include the sensor connector, the ECM connector, and any in between the two such as jumper harnesses or the Engine-to-Chassis harness 14 pin connector where applicable.

© 2009 Polaris Sales Inc.

TROUBLE CODES

Code Access Icon

Access codes by clicking on the icon on the Digital Wrench™ diagnostic screen. Refer to Digital Wrench™ guided diagnostics for detailed P-code description and troubleshooting. See page 5.28 for description of FMI / SPN codes and where they appear.

P-CODE NUMBER	BLINK CODE	SPN	FMI	DESCRIPTION
P0107	45	102	4	Manifold Absolute Pressure sensor circuit voltage low - MAP portion of TMAP sensor circuit is open, or shorted to ground.
P0108	46	102	3	Manifold Absolute Pressure sensor circuit voltage high - MAP portion of TMAP sensor circuit is shorted to battery voltage.
P0112	41	105	4	Intake Air Temperature Sensor voltage low - Temperature portion of TMAP sensor circuit is shorted to ground.
P0113	41	105	3	Intake Air Temperature Sensor voltage high - Temperature portion of TMAP sensor circuit is open, or shorted to battery voltage.
P0117	42	110	4	Cylinder Head Temperature (CHT) Sensor voltage low - circuit shorted to ground.
P0118	42	110	3	Cylinder Head Temperature (CHT) Sensor voltage high - circuit open, or shorted to battery voltage.
P0122	22	51	4	Throttle Position Circuit voltage low - TPS open, or shorted to ground.
P0123	22	51	3	Throttle Position Circuit voltage high - TPS shorted to battery voltage.
P0171	34	520204	17	Fuel Correction - system too lean Cyl 1 (Front).
P0172	34	520204	15	Fuel Correction - system too rich Cyl 1 (Front).
P0174	35	520205	17	Fuel Correction - system too lean Cyl 2 (Rear).
P0175	35	520205	15	Fuel Correction - system too rich Cyl 2 (Rear).
P0217	-	110	16	Engine Temperature Sensor - temperature too high.
P0231	56	1347	5	Fuel Pump Driver Circuit - open or shorted to ground.
P0232	56	1347	3	Fuel Pump Driver Circuit - shorted to battery +.
P0261	51	651	5	Injector 1 (Front Cylinder) driver circuit open or shorted to ground.
P0262	51	651	3	Injector 1 (Front Cylinder) driver circuit shorted to battery voltage.
P0264	52	652	5	Injector 2 (Rear Cylinder) driver circuit open or shorted to ground.
P0265	52	652	3	Injector 2 (Rear Cylinder) driver circuit shorted to battery voltage.
P0336	44	636	8	Crankshaft Position Sensor fault - missing tooth signal not detected in CPS signal within the correct period of time.
P0443	82	520202	3	Canister Purge Valve - driver circuit short to battery +.
P0444	82	520202	5	Canister Purge Valve - driver circuit open or grounded.
P0503	26	84	2	Vehicle Speed Sensor - data erratic, intermittent, or missing.
P0508	47	520193	5	Idle Air Control (IAC) circuit or IAC motor shorted to ground.
P0509	47	520193	11	Idle Air Control (IAC) circuit or IAC motor open or shorted to battery voltage.
P0519	47	520193	7	Idle Air Control (IAC) position out of range. Note: Low battery or system voltage can also cause P0519 to appear as a historical code. If code appears as historical and the MIL light is not on (and no running condition problem exists), clear the code, charge battery and re-test.
P0562	31	168	4	System Voltage Low - System voltage too low after the engine has been running for a specific period of time.
P0563	31	168	3	System Voltage High - System voltage above allowable limit.
P0914	72	523	2	Gear Position Sensor Signal - signal fault
P0916	72	523	4	Gear Position Sensor Signal - voltage too low
P0917	72	523	3	Gear Position Sensor Signal - voltage too high
P1217	-	110	0	Engine Temperature Sensor - engine overheat shutdown. (2009 only)

TABLE CONTINUED ON FOLLOWING PAGE

© 2009 Polaris Sales Inc.

P-CODE NUMBER	BLINK CODE	SPN	FMI	DESCRIPTION
P1351	36	1268	5	Ignition Coil Primary Driver Cyl 1 (Front) - driver circuit open or grounded
P1352	37	1269	5	Ignition Coil Primary Driver Cyl 1 (Front) - driver circuit short to battery +
P1353	36	1268	3	Ignition Coil Primary Driver Cyl 2 (Rear) - driver circuit open or grounded
P1354	37	1269	3	Ignition Coil Primary Driver Cyl 2 (Rear) - driver circuit short to battery +
P1501	64	520200	2	Tipover Sensor (Rollover) - signal fault.
P1502	64	520200	4	Tipover Sensor (Rollover) - voltage low.
P1503	64	520200	3	Tipover Sensor (Rollover) - voltage high.
P1504	64	520200	14	Tipover Sensor (Rollover) - tipover condition detected.
P1651	55	1213	5	Check Engine Lamp (MIL) - MIL lamp driver circuit open or shorted to ground.
P1653	55	1213	3	Check Engine Lamp (MIL) - MIL lamp driver circuit shorted to battery voltage.
P1710	-	2369	5	Right Turn Indicator Driver Circuit - driver circuit open / grounded. (2009/2010 only)
P1711	-	2369	3	Right Turn Indicator Driver Circuit - driver circuit shorted to battery + (2009/2010 only)
P1714	-	2367	5	Left Turn Indicator Driver Circuit - driver circuit open / grounded. (2009/2010 only)
P1715	-	2367	3	Left Turn Indicator Driver Circuit - driver circuit shorted to battery + (2009/2010 only)

SPN / FMI ERROR CODES

If the CHECK ENGINE (MIL) light is ON, an ERROR message will appear after the normal LCD Information Display functions (Miles, Trip 1, Trip 2, Miles per Gallon, Average Speed, etc.). Use the MODE button to toggle through the various normal display options and view the ERROR message at the end.

The ERROR message will appear as a 2-part message consisting of an FMI and SPN number.

Example: ERROR 14 - 520200 corresponds to FMI 3 / SPN 520200 (and Trouble Code P1504) in the table above for this combination. The best course of action is to connect Digital Wrench to view logged codes directly and use the guided diagnostics for that code; however, if Digital Wrench is not available you can use the description of the FMI / SPN code to determine which system or component may be causing the code by reading the description from the table.

NOTE: These “ERROR” codes are not stored in the Information Display. The error screen will only appear when the Check Engine light is ON*. If the key is turned OFF, the code and message is lost, but will reappear if the fault is still present after re-starting the engine.

*SPN 520193 / FMI 7: This code can appear on the display if battery / system voltage falls below a set minimum. If this code appears (due to low voltage) the MIL light will not appear. See Description for Trouble Code P0519 on page 5.27 and page 5.36.

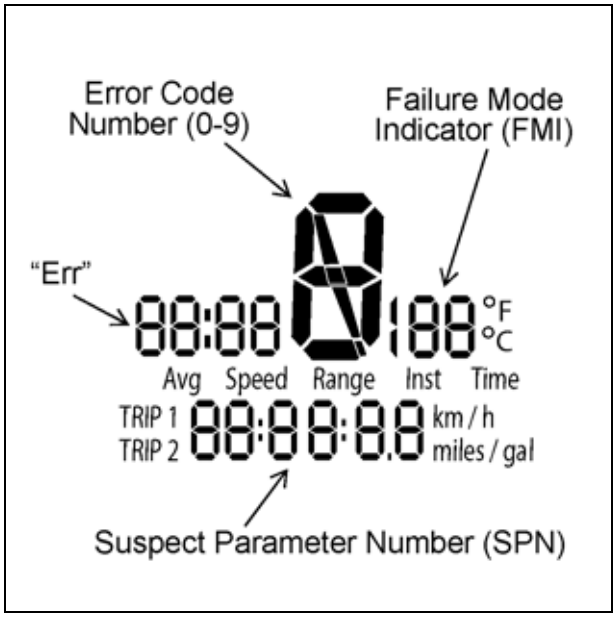

© 2009 Polaris Sales Inc.

ECM HARNESS CONNECTOR TEST PRECAUTIONS

NOTICE: Tests in this section may require reading resistance and voltages at ECM connector. Once ECM connector has been removed from the ECM:

- Do not touch pins on the ECM. Static electricity from your body can damage the ECM.
- Do not attempt to perform tests on the ECM unit.
- Always use the appropriate test connector from the Electrical Connector Test Adapter Kit (PV-43526).
- DO NOT attempt to use a standard meter probe or other devices to probe the sockets in the ECM connector. Doing so could expand the terminal socket or damage the connector case, create a problem where none existed before, and complicate the diagnostic process.
- Sensor tests on the following pages can often be performed at the sensor connector itself or at the ECM connector based on accessibility of the connector or wiring.
- If you perform the test at the sensor and it tests within the specified range (OK), you should then test the circuit wiring, which usually originates at the ECM 60-pin connector, but may include other connections such as the Engine-to-Chassis harness 14 pin connector (located under the seat). Be sure to check all easily accessed connectors and wiring first, to reduce diagnostic time

ECM CONNECTOR REMOVAL

1. Remove seat (page 3.27).

NOTICE: The lock lever also serves as an eject / install mechanism for the 60 pin connector. When removing or installing the connector, you should pull or push lightly on the connector while sliding the lock lever to assist the mechanism, keeping the connector perfectly straight with the ECM to prevent ECM pin or connector block damage.

2. Be sure the connector area is dry and clean.
3. To disconnect ECM 60-pin connector:
   - Guide the connector and pull lightly with one hand while sliding the lock lever outward (toward the right side of the vehicle).
   - Pull the connector straight out of the ECM.

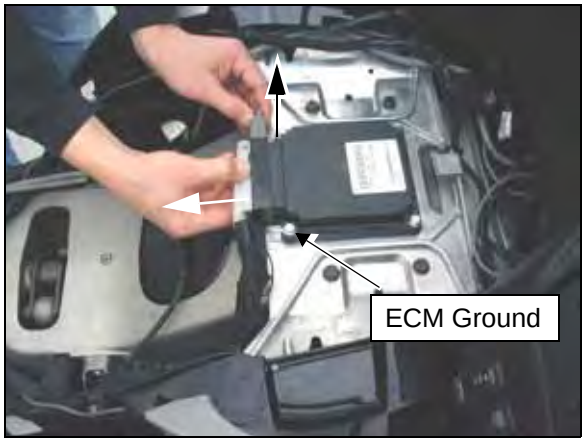

ECM Connector Installation

1. Carefully align the ECM connector straight with the flange on the ECM. (Do not tip or rotate the connector into the ECM).
2. Gently apply straight inward pressure on the connector while sliding the lock lever inward until the lever stops and the connector is fully seated.

ECM REMOVAL

1. Remove seat (page 3.27).
2. Disconnect the harness from the ECM (page 5.29).
3. Remove the mounting screws. Note the washer placed between the ECM and the support plate, and also the location of the ground wire for installation.

© 2009 Polaris Sales Inc.

EFI SENSOR CIRCUIT WIRING DIAGRAMS

NOTE: IAC diagram is on page 5.47

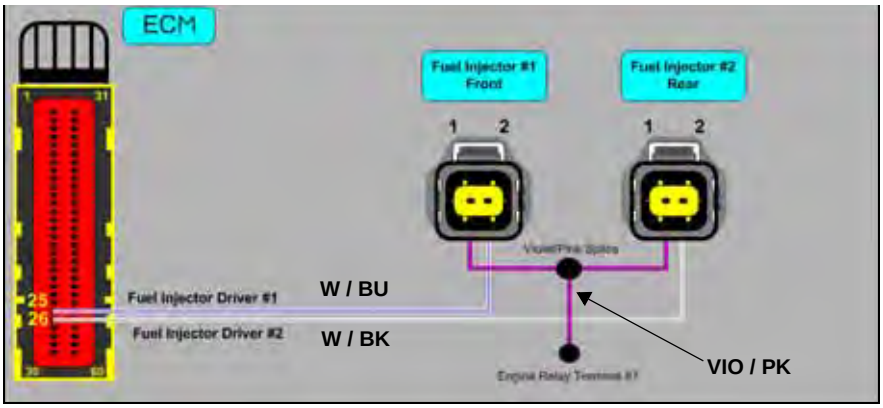

FUEL INJECTORS

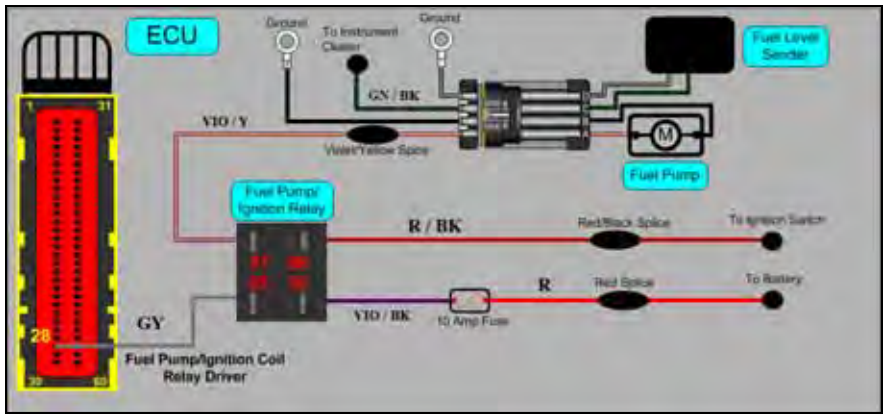

FUEL PUMP

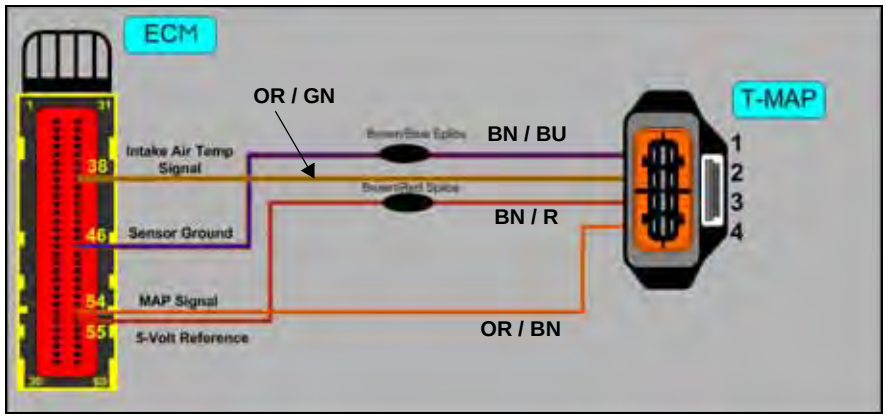

INTAKE AIR TEMP

MANIFOLD ABSOLUTE PRESSURE (MAP)

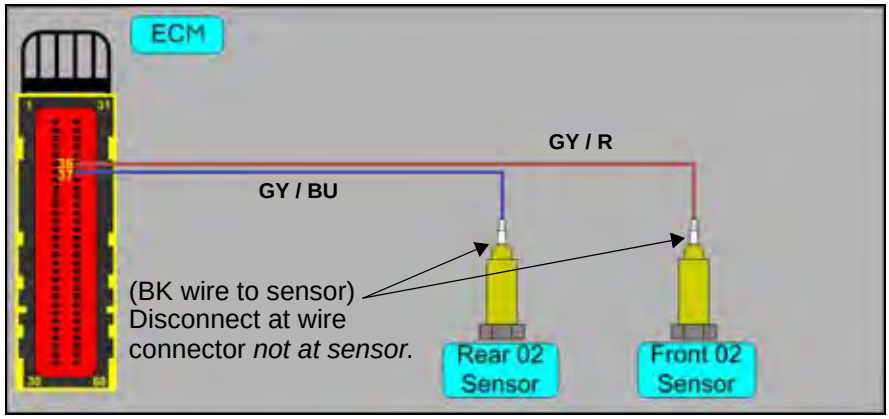

OXYGEN SENSOR

© 2009 Polaris Sales Inc.

EFI SENSOR CIRCUIT WIRING DIAGRAMS

NOTE: IAC diagram is on page 5.47

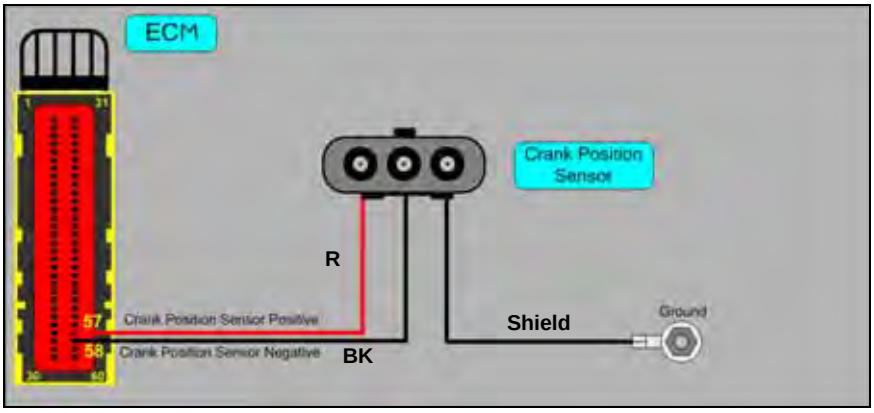

CRANKSHAFT POSITION SENSOR

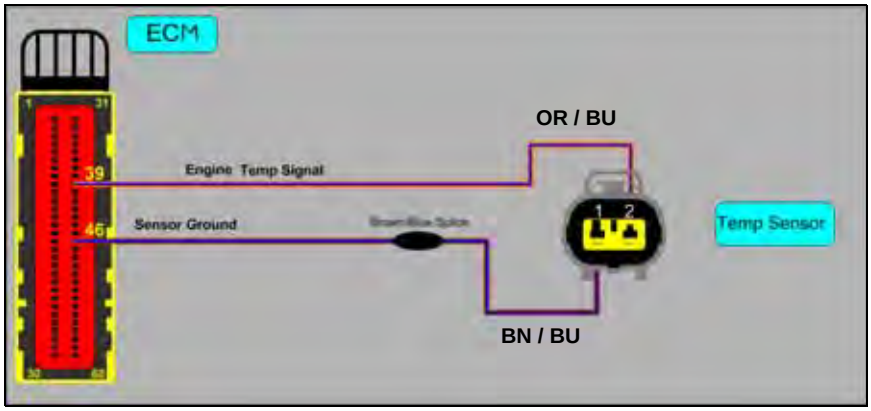

CYLINDER HEAD TEMP (CHT)

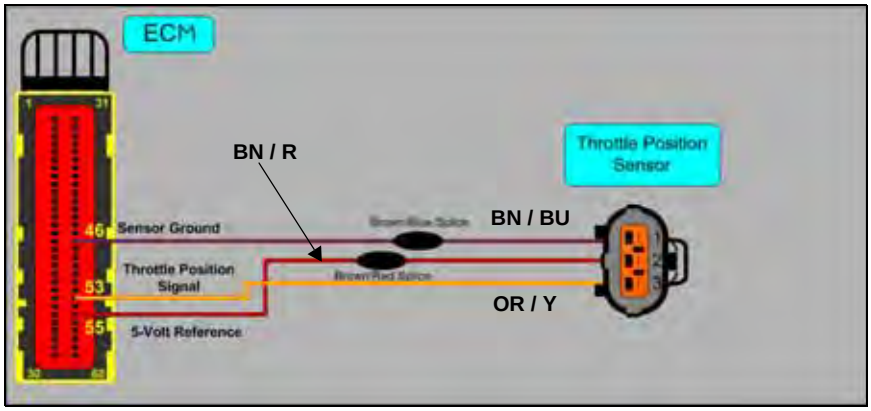

THROTTLE POSITION SENSOR (TPS)

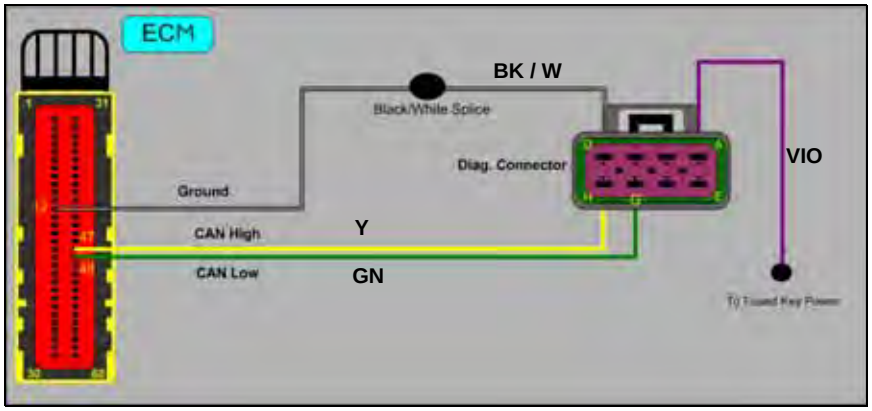

DIAGNOSTIC CONNECTOR

© 2009 Polaris Sales Inc.

SENSOR TESTS

THROTTLE POSITION SENSOR (TPS) DIAGNOSTICS

FAIL CODE: P0122 / P0123		
INDICATES	**INSPECT**	**LOCATION**
Voltage received at ECM from TPS is outside of parameters.	Resistance readings at ECM connector. This test inspects TPS and wiring.	Left side throttle body

To view and clear trouble codes refer to page 5.26. See page 5.31 for wire colors / pin number in connector.

1. Disconnect ECM 60 pin connector (page 5.29).
2. Attach test lead adapters to meter leads and set DMM selector to measure resistance.
3. Place test leads in open side of connector (**not the ECM**) as indicated in chart below.
4. If results are outside of specifications, disconnect TPS.
5. Inspect wires for continuity from ECM connector to TPS connector. If any wire has no continuity or high resistance, inspect wire harness.
6. If good continuity exists, test TPS separately. Compare to chart below.

TOP VIEW - ECM CONNECTOR (Wire side is shown - perform tests on other side)

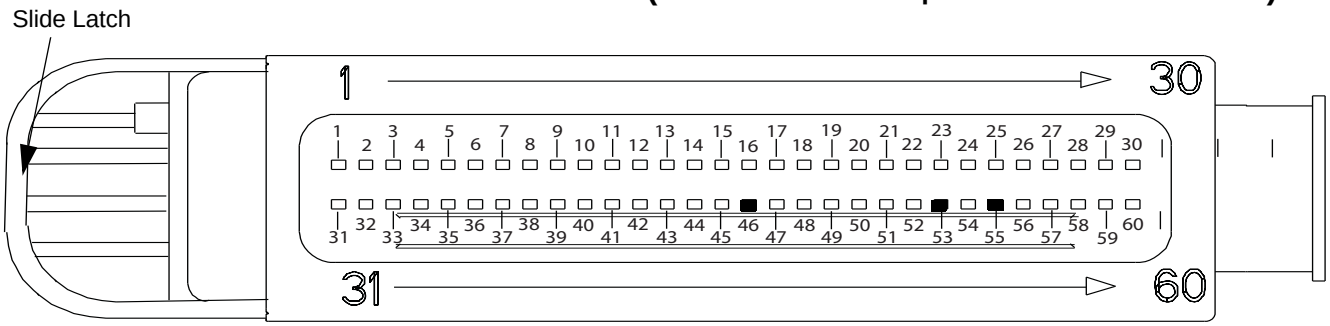

(BOOT AND WIRE COVER REMOVED)

Note: Touch pins with probes, do not force probe into connector pin.

COMPONENT	METER SETTING	TEST CONNECTIONS	SPECIFICATIONS (± 10%)
TPS signal (OR / Y) to +5 VDC reference voltage (BN/R)	OHMS	Pin #53 to #55	1000 - 5000 Ohm +/- 1K Ohm. Resistance changes smoothly as throttle is opened and closed. No gaps.
TPS signal (OR / Y) to signal return (BN/BU)	OHMS	Pin #53 to #46	1000 - 5000 Ohm +/- 1K Ohm. Resistance changes smoothly as throttle is opened and closed. No gaps.
TPS +5 VDC ref wire (BN/R) to signal return (BN/BU)	OHMS	Pin #55 to #46	1000 - 5000 Ohm +/- 1K Ohm. NOTE: Reading does not change with throttle position
+5 VDC reference voltage (BN/R)	DC Volts	Red DMM lead to pin 3 of TMAP sensor. Black to ground.	Re-connect ECM 60 pin connector. Disconnect TMAP sensor connector at the sensor. Turn key and stop switch ON. Verify 5 Volts DC present at pin 3 of connector.
NOTE: Resistance readings may vary slightly from vehicle to vehicle. The important thing to remember when testing the TPS is to look for a smooth, uninterrupted sweep between closed and open throttle. Sweep can also be checked using Digital Wrench™ diagnostic software.			

© 2009 Polaris Sales Inc.

TEMPERATURE & MANIFOLD ABSOLUTE PRESSURE SENSOR (TMAP) DIAGNOSTICS

FAIL CODE: P0107 / P0108 (MAP SENSOR COMPONENT OF TMAP SENSOR)		
COMPONENT AFFECTED: Manifold Absolute Pressure Sensor		
INDICATES	**INSPECT**	**LOCATED**
Voltage received at ECM from MAP sensor is outside of parameters.	Continuity of wires from ECM connector to TMAP connector at sensor. Check for +5 DCV at TMAP sensor BN / R wire (ECM connector attached and Ignition key and stop switch ON.) Connect Digital Wrench for MAP sensor test. Approximate voltage examples: ~ 0.6 V @ 30 kPa ~ 1.0 V @ 50 kPa	On rear cylinder head intake port.

To view and clear trouble codes refer to page 5.26. See page 5.30 for wire colors / pin number in connector.

1. Disconnect ECM 60 pin connector (page 5.29).
2. Disconnect TMAP sensor connector (push black tab).
3. Attach test lead adapters to meter leads and set DMM to measure resistance.
4. Place test leads in open side of connector (**not the ECM**) and measure resistance of each wire to the TMAP sensor connector. Verify good continuity on each wire (example: pin 53 of ECM connector to pin 4 of the TMAP connector should have less than .5 Ohm resistance).
5. Re-connect the ECM connector.
6. Turn key ON and turn engine stop switch to RUN.
7. Set DMM to measure DC Volts.
8. Test for 5VDC reference voltage at connector (see test in table below).
9. Check the MAP Sensor Volts and pressure in Digital Wrench. Voltage should be approximately 0.6 V @ 30 kPa, (approximately 1.0 V @ 50 kPa), etc.

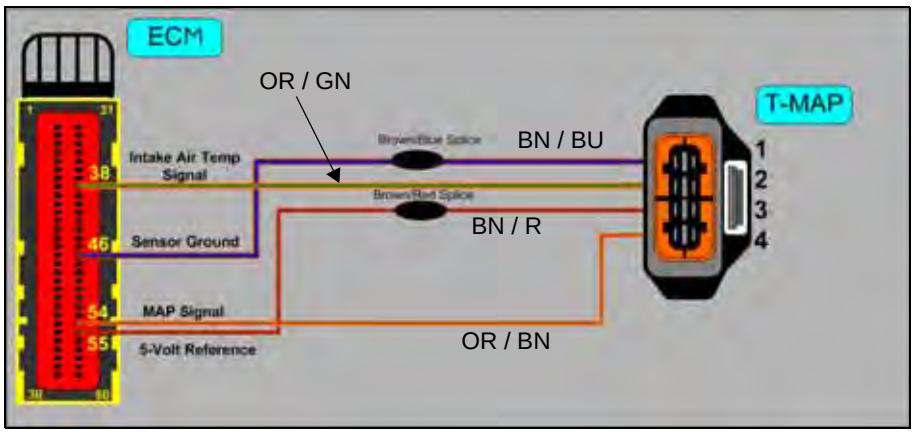

TMAP Sensors

2008= 250 kPa

2009 / 2010 = 115 kPa

Do not interchange.

COMPONENT	METER SETTING	TEST CONNECTIONS	SPECIFICATIONS (±10%)
+5 VDC reference voltage (BN/R) to TMAP connector.	DC Volts	Red DMM lead to pin 3 of TMAP. Black DMM lead to ground.	Re-connect ECM 60 pin connector. Disconnect TMAP connector from sensor. Turn key / stop switch ON. Verify 5 Volts DC present at pin 3 of connector. If Code 107 (Low voltage to MAP) code is present, jump pin 3 (5 V ref) to pin 4 (sigrtrn). Does code go out? If yes, replace MAP Sensor. If no, check wiring.

© 2009 Polaris Sales Inc.

AIR TEMPERATURE SENSOR (ATS) DIAGNOSTICS

FAIL CODE: P0112 / P0113		
COMPONENT AFFECTED: Air Temperature Sensor		
INDICATES	**INSPECT**	**LOCATED**
Voltage received at ECM from ATS is outside of parameters.	Resistance readings at ECM connector (ECM disconnected). This test will inspect wiring, connectors, and Air Temperature sensor resistance.	On rear cylinder head intake port (in TMAP sensor).

To view and clear trouble codes refer to page 5.26. See page 5.30 for wire colors / pin number in connector.

1. Disconnect ECM 60 pin connector (page 5.29).
2. Attach test lead adapters to meter leads.
3. Set DMM to measure resistance.
4. Place meter leads in pins 38 and 46 of connector **(not the ECM)** and compare to specification.

NOTE: Temperature of engine / sensor must be as specified.

5. If reading is outside of specifications, disconnect air temperature sensor connector and verify wires have good continuity back to the 60 pin connector.
6. If wiring is correct, measure the sensor resistance directly at the sensor. In addition, ATS data can be viewed as a temperature value in Digital Wrench™ diagnostic software. The sensor should display a temperature close to ambient room temperature.
7. Replace TMAP sensor if out of specified range.

TOP VIEW - ECM CONNECTOR (Wire side is shown - perform tests on other side)

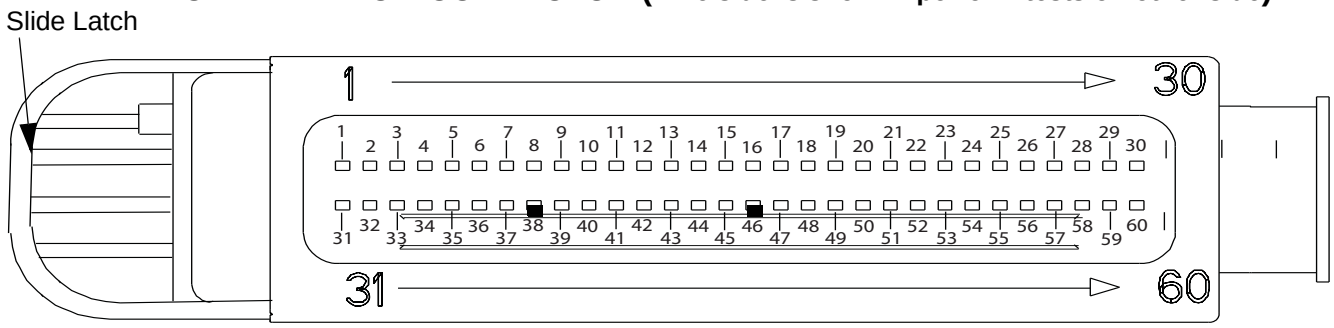

(BOOT AND WIRE COVER REMOVED)

Note: Touch pins with probes, do not force probe into connector pin.

COMPONENT	METER SETTING	TEST CONNECTIONS	SPECIFICATIONS (±10%)
AIR TEMPERATURE SENSOR signal return (BN / BU) to OR / GN	OHMS	Pin #46 to #38	2.5 K Ohms +/- 5% at 20° C (68° F)

© 2009 Polaris Sales Inc.

CYLINDER HEAD TEMPERATURE SENSOR (CHT) DIAGNOSTICS

FAIL CODE: P0117 / P0118	
COMPONENT AFFECTED: Cylinder Head Temperature Sensor (Engine Temperature)	
INDICATES	**INSPECT**
Voltage received at ECM from CHT sensor is outside of parameters.	Resistance readings through sensor and wiring at ECM connector (ECM disconnected). This will test will inspect the wiring, connectors, and CHT sensor resistance.

To view and clear trouble codes refer to page 5.26. See page 5.31 for wire colors / pin number in connector.

1. Disconnect ECM 60 pin connector (page 5.29).
2. Attach test lead adapters to meter leads.
3. Set DMM to measure resistance.
4. Measure resistance between pin 46 and pin 39 of the ECM connector and compare to specification.
5. If resistance is out of specified range, disconnect sensor and measure the resistance through each wire from ECM connector to the sensor connector. Resistance should be less than 1 Ohm (good continuity).
6. If continuity is good from Step 5, measure the resistance through the sensor and compare to specification.

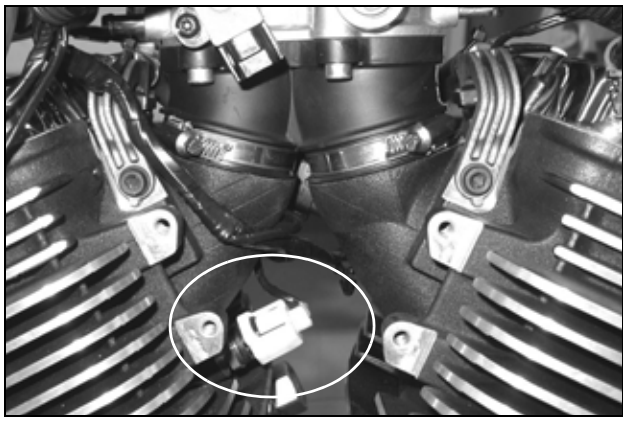

Left Side View

TOP VIEW - ECM CONNECTOR (Wire side is shown - perform tests on other side)

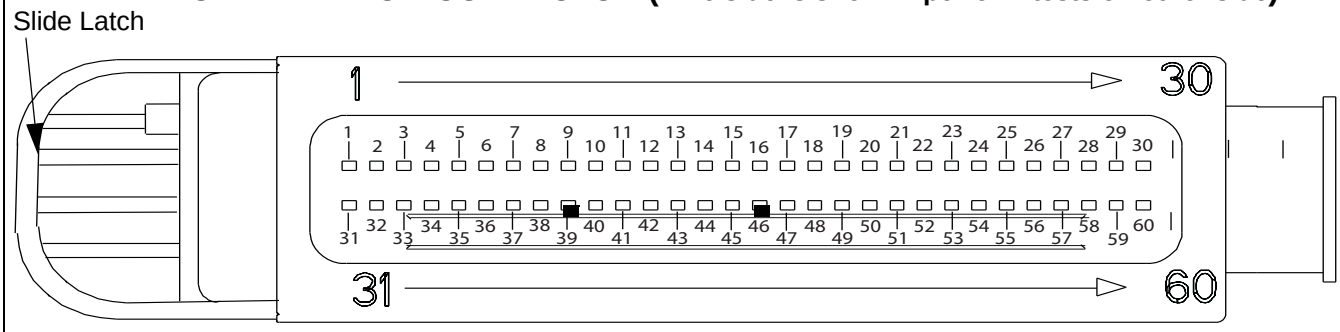

(BOOT AND WIRE COVER REMOVED)

Note: Touch pins with probes, do not force probe into connector pin.

TEST #	COMPONENT	METER SETTING	TEST CONNECTIONS	SPECIFICATIONS (±10%)
CYLINDER HEAD TEMPERATURE SENSOR		OHMS	Pin #46 to #39	30.5 K Ohms +/- 13% @ 25° C (77° F)

© 2009 Polaris Sales Inc.

IDLE AIR CONTROL (IAC)

Air leaks or air restrictions in the IAC air supply or delivery hoses will not cause a trouble code in the system, and are the most common cause of idle control problems. Always be sure hoses are connected properly and securely when idle control problems exist. If an IAC code is present, perform the following circuit tests.

FAIL CODE: P0508 / P0509		
INDICATES	**INSPECT**	**LOCATION**
P0508 - IAC circuit or IAC motor shorted to ground. P0509 - IAC circuit or IAC motor open or shorted to battery voltage. P0519 - IAC position out of range. NOTE: This code can also be due to low battery/system voltage. If there is no running condition problem, clear the code and be sure battery is fully charged and in good condition.	Connector pin visual inspection. Continuity - Verify ECM to IAC motor harness connector. Verify battery voltage is supplied to IAC motor on VIO/PK wire from Engine Relay.	IAC valve - under fuel rail cover. (Upper right side triangular cover)

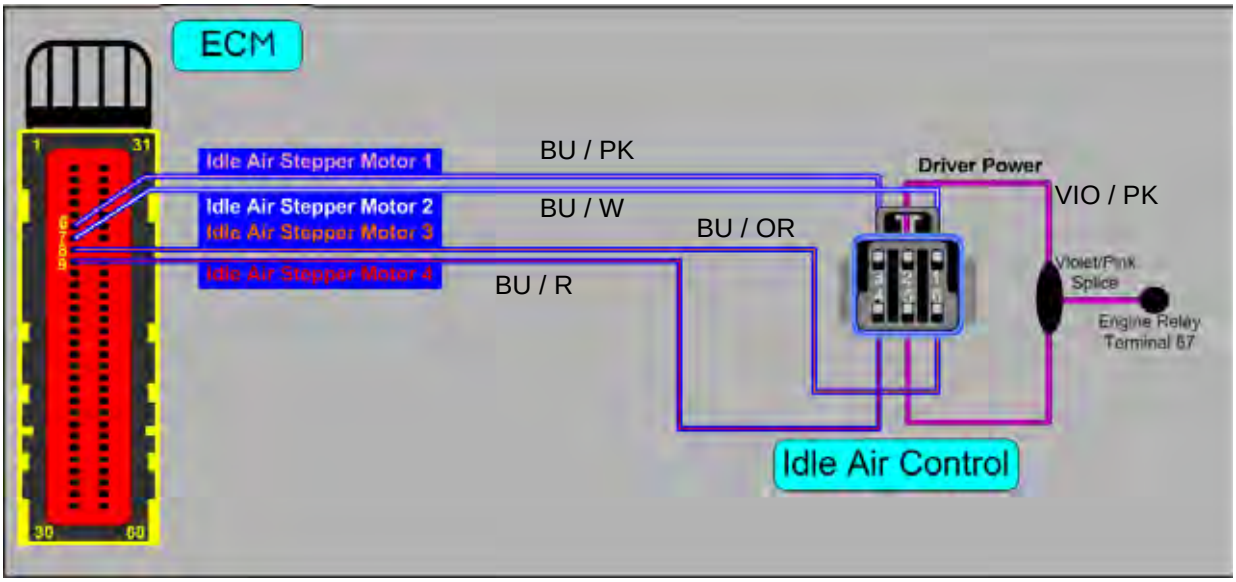

COMPONENT	METER SETTING	TEST CONNECTIONS	SPECIFICATIONS (± 10%)
IAC Circuit Resistance	OHMS	ECM pin 6 to IAC connector pin 3.	Less than 1 Ohm
IAC Circuit Resistance	OHMS	ECM pin 7 to IAC connector pin 1.	Less than 1 Ohm
IAC Circuit Resistance	OHMS	ECM pin 8 to IAC connector pin 6.	Less than 1 Ohm
IAC Circuit Resistance	OHMS	ECM pin 9 to IAC motor harness connector pin 4.	Less than 1 Ohm
Voltage Supply To IAC Motor Harness Connector	DCV	DMM "+" lead to Pin 2 or pin 5 of IAC harness (VIO/PK). DMM "-" lead to ground.	Re-connect ECM 60 pin connector. Disconnect wire harness from IAC motor. Turn ignition key and engine kill switch ON. Check for battery voltage at pin 2 and pin 5 of IAC motor harness connector.

© 2009 Polaris Sales Inc.

VEHICLE SPEED SENSOR TEST

To view and clear trouble codes refer to page 5.26. See page 5.25 for wire colors / pin number in connector.

1. Refer to Chapter 19 to test the speed sensor, located on the crankcase behind the rear cylinder (A).

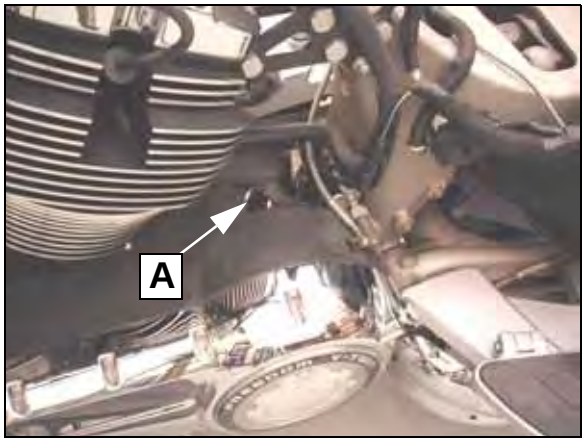

GEAR POSITION SWITCH TEST

1. Refer to Digital Wrench and Chapter 19 to test the gear position switch on the vehicle. The connector is located at the top of the engine crankcase behind the side covers.

MEMORY CHECK SUM ERROR

To view and clear trouble codes refer to page 5.26. See page 5.25 for wire colors / pin number in connector.

FAIL CODE: P0601	
COMPONENT AFFECTED: ECM	
INDICATES	INSPECT / ACTION
Module Memory Check Sum Error when installing new ECM.	Clear code and check to see if code re-appears

NOTE: All new ECMs have the "Memory Check Sum Error" at first power-up after the memory is loaded into the ECM. This code must be cleared at the time the ECM is initialized. If this code appears when using the diagnostic software, it is possible that a new ECM was not cleared successfully. If this is the case, the code may be present without an actual fault.

1. If Trouble Code message P0601 (Internal Control Module Memory Check Sum Error) is present when using the diagnostic software, first record any other faults present, then try clearing the P0601 trouble code.
2. If the code reappears, further inspection is required; however, it is more likely the code was not cleared from memory during initialization, and will not be present after it is cleared.

TIPOVER SENSOR

Refer to Chapter 19 and Digital Wrench for tipover sensor information.

© 2009 Polaris Sales Inc.

CRANKSHAFT POSITION SENSOR DIAGNOSTICS

See page 17.11 for CPS test procedure.

BATTERY VOLTAGE AT ECM DIAGNOSTICS

FAIL CODE: P0562 / P0563	
COMPONENT AFFECTED: Battery Voltage to ECM	
INDICATES	**INSPECT**
Voltage received at ECM is outside of parameters.	Vehicle Battery Voltage

To view and clear trouble codes refer to page 5.26. See page 5.25 for wire colors / pin number in connector.

1. Turn the DMM selector dial to measure DC volts. Measure open circuit voltage at battery (page 18.7).
2. Battery voltage must be 12.5VDC or above. If below 12.5, charge or replace battery before proceeding.
3. Check the 15 A Engine fuse.
4. Connect red (+) DMM lead to Pin A of the Engine-to-Chassis wire harness connector (page 5.29). Connect black (-) DMM lead to battery negative terminal.
5. Turn ignition key ON and cycle the engine stop switch from OFF to RUN. Battery voltage should appear on Pin A for 2-3 seconds after the engine stop switch is turned ON. To repeat the test, leave key ON and turn stop switch OFF for at least 10 seconds before repeating test.
6. Turn both ignition and engine stop switches OFF.
7. Attach test lead adapters to the DMM leads, or use Fluke accessory probes.
8. Disconnect ECM 60 pin connector (page 5.29).
9. Connect a jumper wire from Pin 11 in the ECM connector to ground. Verify battery voltage is present on pins 1 and 31 when Pin 11 is grounded. If voltage is not present, test related wiring If voltage is present, go to Step 10.
10. Check for power at ECM Pin 34 (for 2-3 seconds) with ignition key ON and engine stop switch set to RUN.

TOP VIEW - ECM CONNECTOR (Wire side is shown - perform tests on other side)

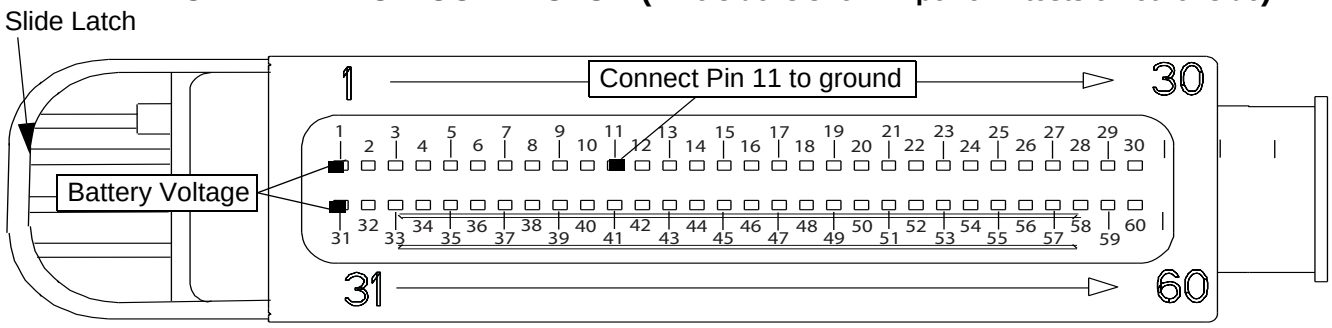

(BOOT AND WIRE COVER REMOVED)

Note: Touch pins with probes, do not force probe into connector pin.

© 2009 Polaris Sales Inc.

DIGITAL WRENCH

USING DIGITAL WRENCH™ DIAGNOSTIC SOFTWARE

Refer to Section 2, 3, and 4 in the Instruction Manual provided in the Diagnostic Tool Kit PV-46085 to install the Polaris Digital Wrench™ software on a laptop computer. Once installed, select the HELP icon (?) for more information.

TOOLS

DIGITAL WRENCH DIAGNOSTIC SOFTWARE	PART NUMBER
Victory/Polaris Diagnostic Tool Kit	PU-46085-A
PU-46085-A (above) INCLUDES:	Digital Wrench Software: PU-48731
	Standard Interface Cable: PU-47151
	Victory Adapter: PV-46085-2
	SmartLink Interface Kit: PU-47471
Fuel Pressure Gauge	PU-43506-A
Fuel Pressure Gauge Adapter	PV-48656
Fluke 73 Digital Multi-Meter or Fluke 77 DMM	PV-48656 (Fluke 77 - PV-43568)
Electrical Connector Test Adapter Kit	PV-43526
Laptop Computer (Refer to diagnostic software user manual or HELP section for minimum specifications	Commercially Available

DIAGNOSTIC SOFTWARE VERSION

Always be sure you are using the most current version of Digital Wrench to ensure you have the latest enhancements. Reprogramming files are added to file sets as required for new models, new accessory kits, and fuel/ignition map updates. For information on how to determine if you have the latest file set download available, see Reprogramming Tips on page 5.45.

TPS CALIBRATION NOT REQUIRED

The TPS *does not require calibration* in the closed loop EFI system as in earlier systems. TPS Calibration is not a menu option in Digital Wrench for 2008-current models.

ECM REPLACEMENT

Although the need for ECM replacement is unlikely, a specific replacement procedure is required to ensure that all essential data contained within the original ECM is transferred to the replacement ECM.

Refer to procedure and carefully follow all instructions provided in Digital Wrench.

© 2009 Polaris Sales Inc.

DIGITAL WRENCH™ FEATURES

Once connected to Digital Wrench™, a variety of features are available for reference or to use as diagnostic tools.

You do not have to be connected to a vehicle to use the help feature.

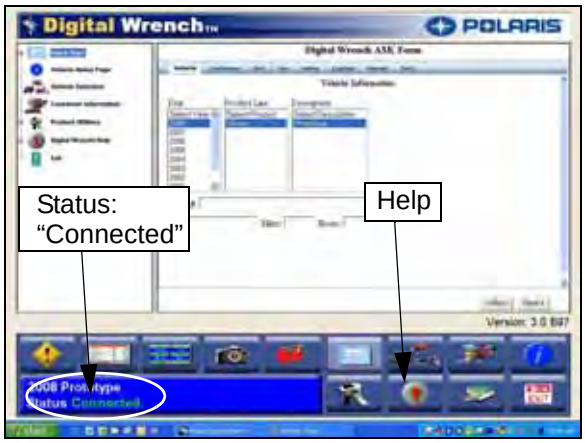

Vehicle specific service reports can be saved for future reference.

Data grids with typical or "normal" sensor values can be saved for future reference. Some examples are shown on the following pages.

GUIDED DIAGNOSTICS AVAILABLE

Guided diagnostics are available within Digital Wrench™ for all supported Trouble Codes (that is, any fault that will turn on the CHK ENG light).

In addition, guided diagnostics are also available for many other electrical sub systems.

Diagnostic modules are added to subsequent versions of Digital Wrench™ as they become available. Check your release version often and upgrade to be sure you're using the most current tools available.

DIGITAL WRENCH™ COMMUNICATION ERRORS

If you experience problems connecting to a vehicle or any Digital Wrench related problem, visit the Digital Wrench Knowledge Base for the most current troubleshooting information, FAQs, downloads and software updates at: ***http://polaris.diagsys.com/.***

Victory dealers can access the Digital Wrench site by visiting www.polarisdealers.com and clicking on the Digital Wrench Updates link in the Service and Warranty drop down menu.

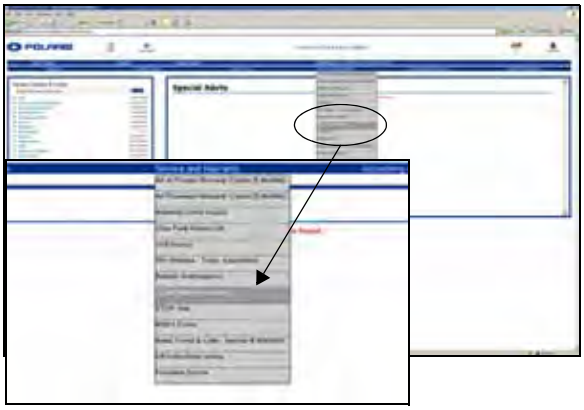

© 2009 Polaris Sales Inc.

DIGITAL WRENCH™ FEATURE MAP

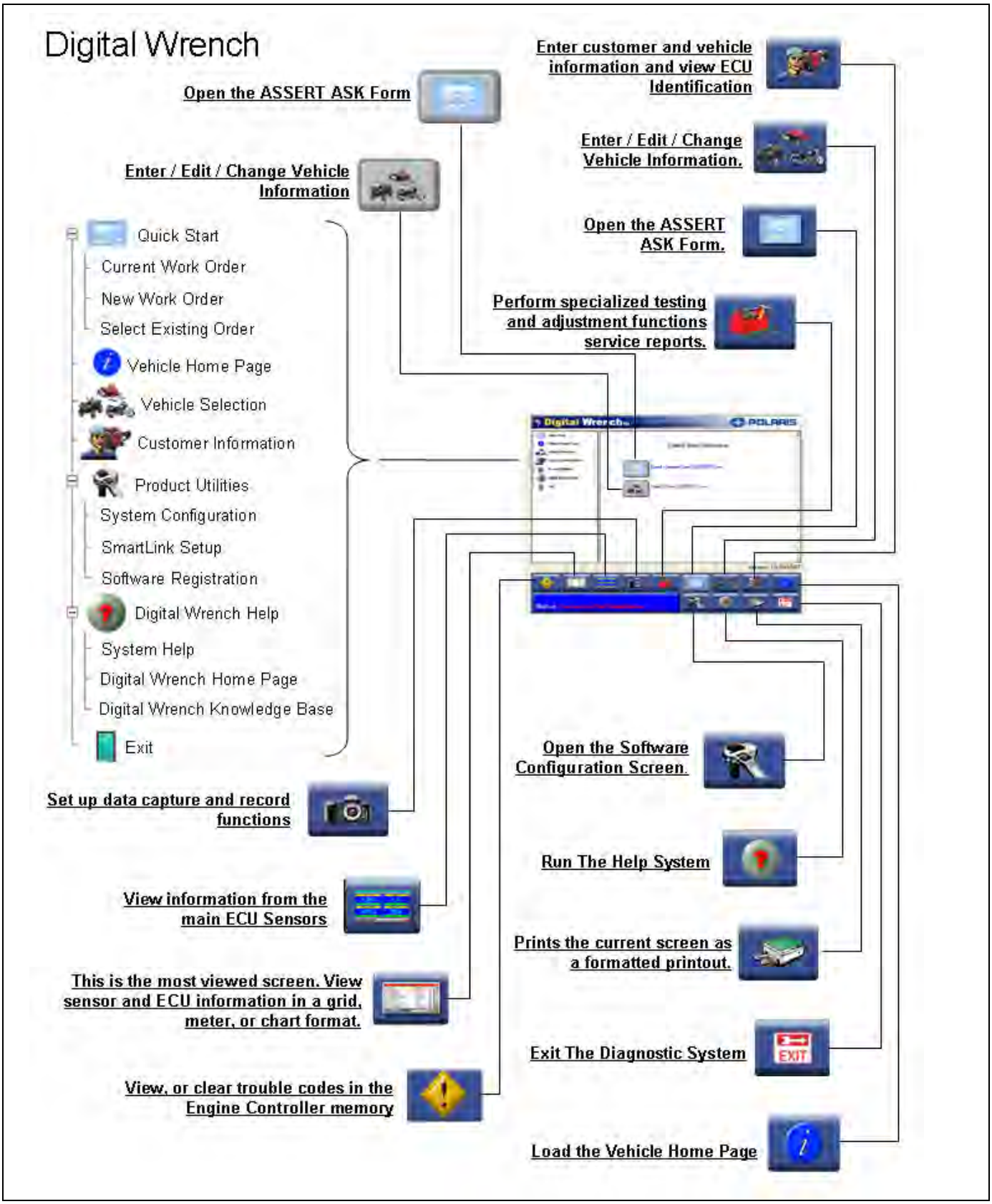

© 2009 Polaris Sales Inc.

DIGITAL WRENCH SCREEN EXAMPLES

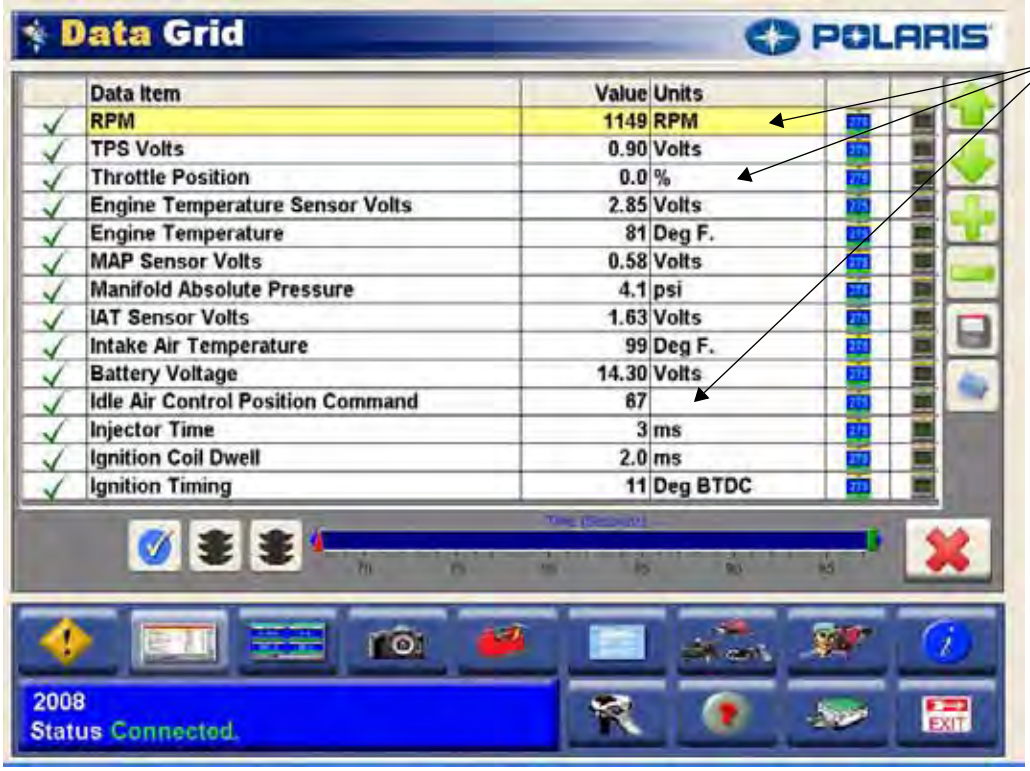

Data Item	Value	Units
RPM	1149	RPM
TPS Volts	0.90	Volts
Throttle Position	0.0	%
Engine Temperature Sensor Volts	2.85	Volts
Engine Temperature	81	Deg F.
MAP Sensor Volts	0.58	Volts
Manifold Absolute Pressure	4.1	psi
IAT Sensor Volts	1.63	Volts
Intake Air Temperature	99	Deg F.
Battery Voltage	14.30	Volts
Idle Air Control Position Command	67	
Injector Time	3	ms
Ignition Coil Dwell	2.0	ms
Ignition Timing	11	Deg BTDC

Cold engine at idle during warm up.

Data Item	Value	Units
RPM	2610	RPM
TPS Volts	1.23	Volts
Throttle Position	8.8	%
Engine Temperature Sensor Volts	2.23	Volts
Engine Temperature	102	Deg F.
MAP Sensor Volts	0.63	Volts
Manifold Absolute Pressure	4.6	psi
IAT Sensor Volts	1.53	Volts
Intake Air Temperature	104	Deg F.
Battery Voltage	14.60	Volts
Idle Air Control Position Command	122	
Injector Time	4	ms
Ignition Coil Dwell	2.0	ms
Ignition Timing	34	Deg BTDC

Throttle partially open. TPS voltage value has increased.

© 2009 Polaris Sales Inc.

DIGITAL WRENCH SCREEN EXAMPLES

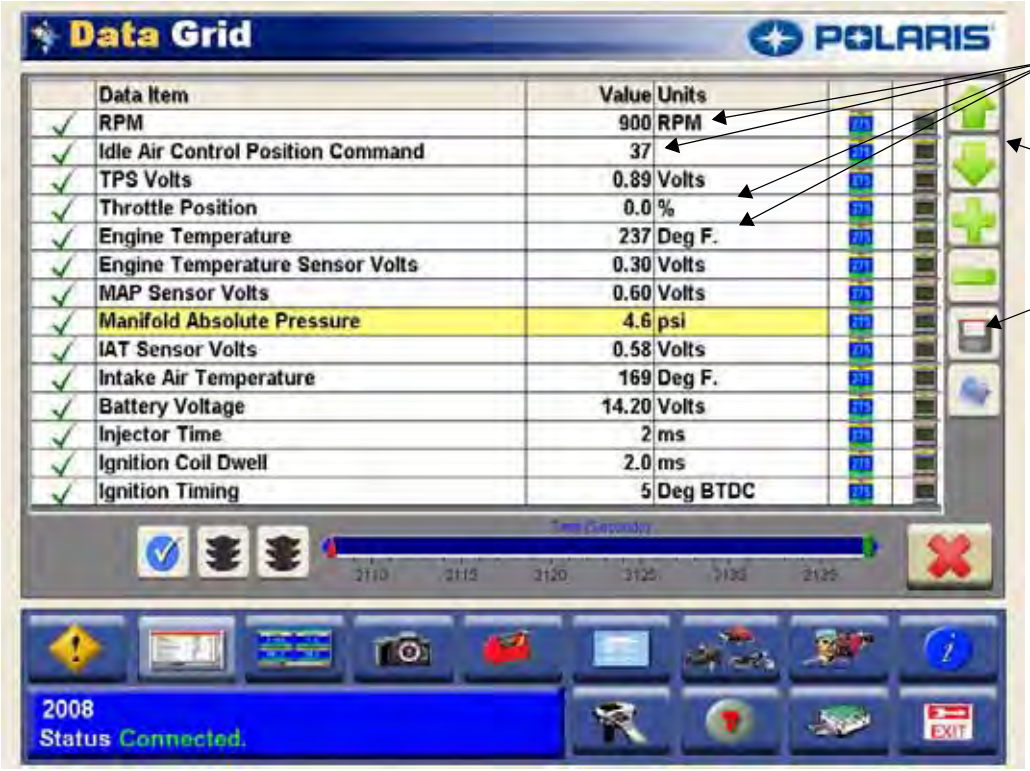

Warm engine at idle. RPM has stabilized

Change the position of various data items in the table with these buttons.

Save data grid for future reference

Meter Grid Display items

© 2009 Polaris Sales Inc.

DIGITAL WRENCH SCREEN EXAMPLES

TPS Sweep can be checked for smooth transition from zero to full throttle with engine off

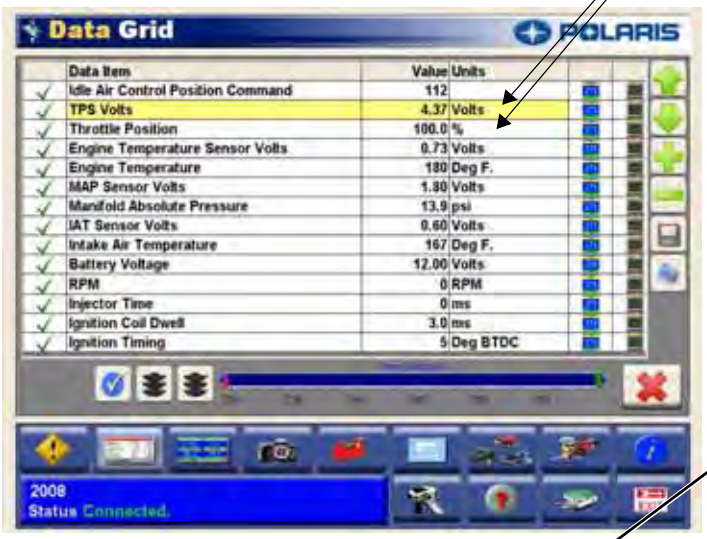

Special Tests menu for Service Reports

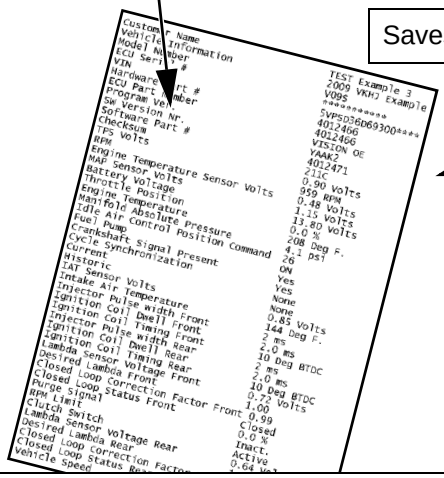

Saves as a .txt file

You can save a Service Report for future reference, comparison, or for diagnostic assistance.

© 2009 Polaris Sales Inc.

REPROGRAMMING THE ENGINE CONTROL MODULE (ECM)

PROCESS OVERVIEW

The Digital Wrench™ Engine Controller Reprogramming (or "Reflash") feature allows reprogramming of the ECM fuel and ignition map. To successfully reprogram the ECM, an Authorization Key must be obtained by entering a Request Code in the box provided on the Reflash Authorization site. The Request Code is automatically generated by Digital Wrench during the reprogramming process. The Reflash Authorization site is located under the *Service & Warranty* drop down menu on the dealer website at www.polarisdealers.com.

The Auxiliary Controller Reprogramming feature of Digital Wrench allows reprogramming of the main radio, CB radio, or Instrument Cluster in the same manner as the ECM. **See Chapter 19 for *Auxiliary Controller Reprogramming*.**

NOTICE: *Failure to follow instructions completely and correctly can result in an engine that does not run! Review all Reprogramming Tips below and the following pages to reduce the chance of reprogramming problems.*

REPROGRAMMING TIPS

The reprogramming feature is in the Special Tests menu on the Digital Wrench™ screen. Simply start Digital Wrench and click on the Special Tests menu icon (the red tool box). A technician should be familiar with the process and with computer operation in general before attempting to reprogram an ECM.

If you have not yet installed the software, read the *Install Instructions* in the *Getting Started* section of the Diagnostic System Installation Guide and User Manual. Laptops that fit the *System Requirements* guidelines listed in the User Manual can be used for reprogramming. Pay close attention to system requirements listed for the Windows version on your laptop (*Page 3 of User Manual).*

1. BATTERY VOLTAGE: The majority of problems with reprogramming can be attributed to a low battery. Be sure the battery voltage (no load) is at least **13 volts and at least 12.5 volts with the key ON.** Connect a battery charger if necessary to bring voltage level above minimum. Fully charge the battery before you attempt to reprogram, or leave a charger connected during the process. If "Key ON" voltage is marginal, it may help to remove the headlamp relay in the fuse box (2008 Vision models).

2. DEDICATED LAPTOP: Best results are obtained using a laptop computer that is "dedicated to Polaris/Victory service". A laptop that is used by a variety of people and in several applications around the dealership is more likely to cause a reprogramming problem than one dedicated to Digital Wrench™ diagnostics only.

3. OBTAINING THE LATEST FILE SET: Reprogramming file sets are updated periodically and contain the most recent calibrations for both Stock and Performance updates. If you have the most current version of Digital Wrench (version 3.1 dated 4-27-09 as of this printing) your file sets are current. If you attempt to load a non-current reprogramming file you will be advised when you connect to the Reflash Authorization Website.

To see what version of digital wrench you currently have installed, start Digital Wrench and look on the right side, just above the icon bar.

Compare your version with the version listed in the Downloads area at *www.diagsys.com*. If a later version is available, follow the instructions provide to download the most current version of Digital Wrench which will also update your file set with the most current available.

© 2009 Polaris Sales Inc.

4. CLOSE NON-ESSENTIAL PROGRAMS:
   Victory recommends that you DO NOT install non-essential programs on a Service Department laptop. Camera detection software, Virus Scanners, Tool Bars, etc. may clog up memory if running in the background and make it harder for the diagnostic software to operate. A good "quick check" is the number of icons in the system tray, (icons in the task bar next to the clock). More than 4, or 5 items is a potential problem. Things to watch out for include:
   - Video playing software
   - Automatic programs started by your ISP.
   - Financial software (checking account, business operations and accounting, tax reporting software etc.)
   - All "shareware" & "freeware" downloaded from the internet
   - Personal hand-held PC links (can prevent diagnostic software / reprogram procedure from working)
   - Internet firewalls set to "high security mode" or virus scanning software running in the system tray.

A good rule to follow is that if a particular piece of software wasn't installed when Windows was installed, it has the potential to create problems if it's running at the same time as the diagnostic software. If you're having problems, click on the icons of *non-essential* programs and close, quit, or exit them before starting the reprogramming procedure.

5. KNOW THE PROCESS: If you are not familiar with the entire reprogramming process, review the **HELP** section of the diagnostic software before you attempt reprogramming. Click on the **?** on the toolbar or press F11. The information in the on-line help is the most current and complete information available. This should be your first step until you are familiar with the process.

6. COMMUNICATION PROBLEMS: If you have had problems communicating with a vehicle while performing diagnostic functions, do not attempt reprogramming until the cause has been identified and fixed. Check all connections, and be sure battery voltage is as specified in Step 1.

   Go to *www.diagsys.com* for specific information and FAQs on how to troubleshoot communication problems.

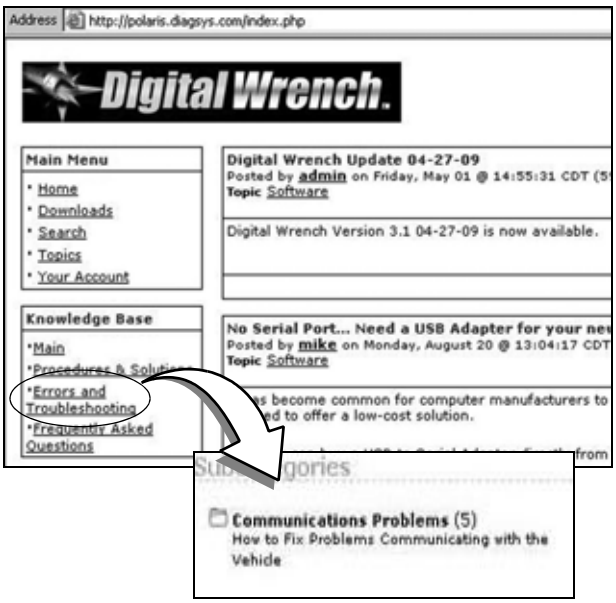

7. DON'T DISTURB THE PC: when a reprogramming is in progress. Don't move the mouse, and don't touch the keyboard. The process only takes a few seconds, and is best left alone until complete.

8. You can select Vehicle Information from the Special Tests menu to view the part number of the software (map) installed when reprogramming is completed.

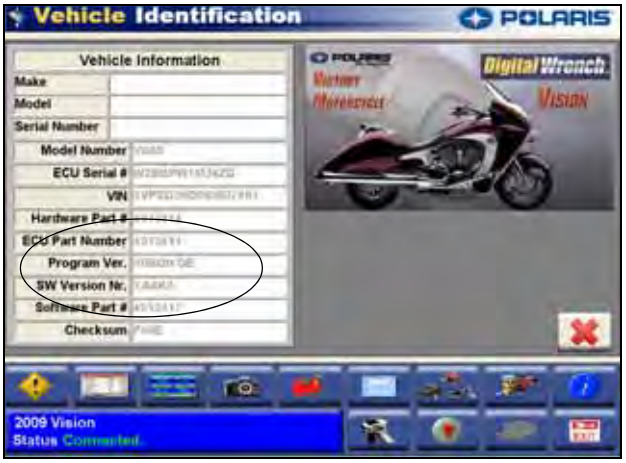

© 2009 Polaris Sales Inc.

REPROGRAMMING PROCESS

If you are not familiar with the reprogramming process, review tips beginning on page 5.45 before you begin. Following is an overview of the reprogramming process. Follow the on-screen instructions as you progress through the steps. If you encounter a problem, always check the On-Line help for current tips and information.

1. Connect the communication cable to the diagnostic connector (A) in the left saddlebag. On models equipped with ABS, remove the cover panel from the inner bag to access the diagnostic connector.

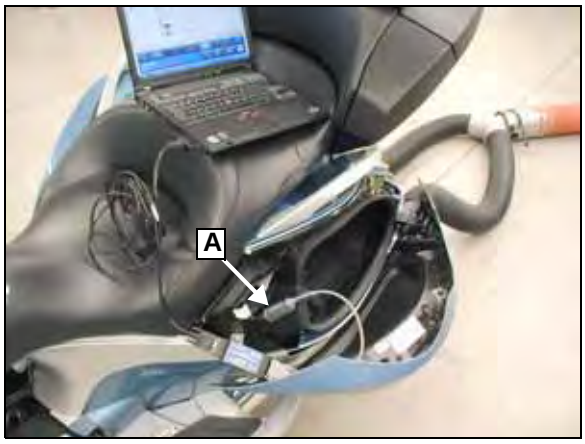

2. Start the Digital Wrench™ program.

3. Select the year, product, and model from the menus, then click the tool box icon to open the Special Tests menu.

4. Select Engine Controller Reprogramming.

5. Select the file you want to load into the ECM then click CONTINUE to proceed to the Integrity Check and obtain a Request Code.

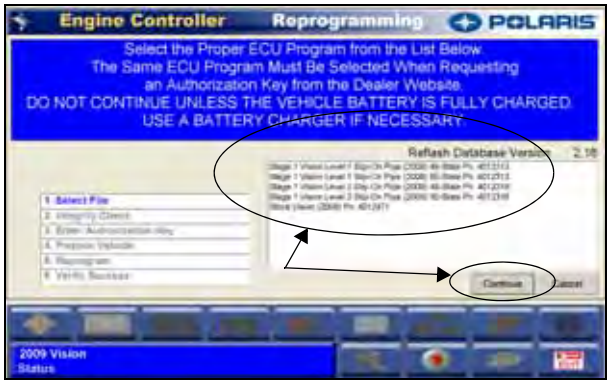

6. Copy the Request Code that will be required on the web site in the next step. DO NOT CLOSE Digital Wrench or the Request Code will be invalid. All characters are letters; there are no numbers in a request code.

NOTE: Request Codes, Calibration I.D. numbers (for accessory exhaust) and Authorization Keys must be entered EXACTLY as they appear on the screen.

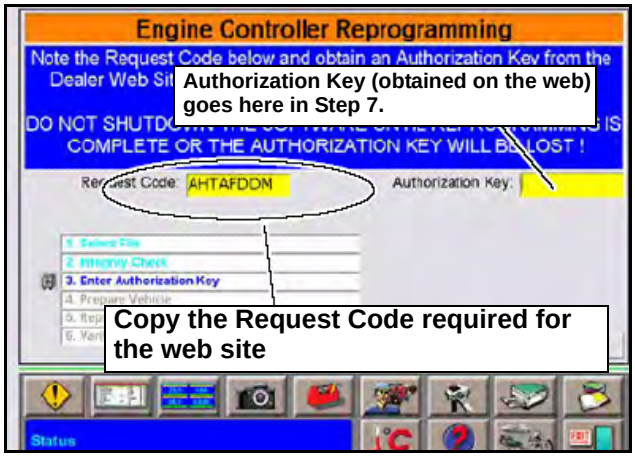

© 2009 Polaris Sales Inc.

7. Go to www.polarisdealers.com and click on “Re-Flash Authorization” from the *Service and Warranty* drop-down menu.

8. Enter (or paste) the Request Code into the box.

9. Select the same file type from the list that you selected previously (e.g. *Stage 1 Vision Level 1 Slip-On Pipe*), and click the Authorize button to proceed to the next screen.

10. In the empty box provided on the screen, enter the 9 digit Calibration I.D number from the card enclosed with the accessory kit, then click “Continue”.

NOTE: Stock reprogramming files do not require a Calibration I.D. number. An Authorization Key will appear after clicking the Authorize button in Step 9.

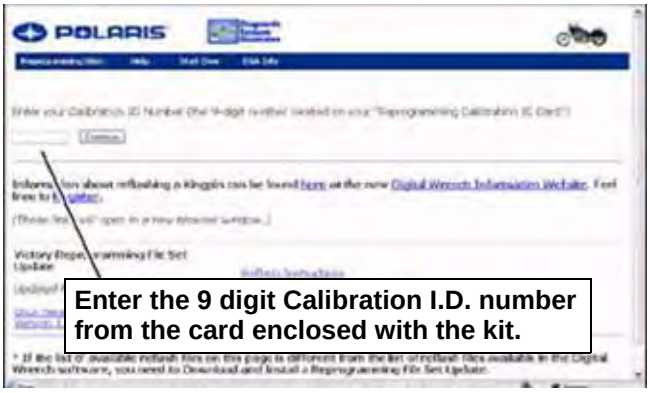

11. An 8-digit “AUTHORIZATION KEY” will be appear in the upper left corner of the screen. Copy this number exactly as it appears, and enter it in the Authorization Key box on the Digital Wrench™ screen. Follow instructions provided on the screen to complete the reprogramming procedure.

© 2009 Polaris Sales Inc.

TROUBLESHOOTING

FUEL SYSTEM TROUBLESHOOTING

PROBLEM	POSSIBLE CAUSE	AFFECTED PART(s)	REPAIR RECOMMENDED
Engine turns over with electric starter, but won't start	Compression too low	See engine section	
	No spark at spark plugs	See ignition system	
	No fuel reaching intake tract	Out of fuel Blown Fuse Plugged fuel filters / lines Fuel pump not working Fuel pressure regulator Faulty fuel pump relay Open wiring / connector Faulty connection at ECM	Add Fuel Replace Clean/Replace Test / Replace Test / Replace Test / Replace Inspect / Repair Inspect / Repair
	Excessively rich or lean fuel mixture	Fuel pump Fuel pressure regulator Crank Position Sensor Low Battery TMAP sensor CHT sensor Fuel Injector	Test / Replace Test / Replace Test / Replace Test / Replace Test / Replace Test / Replace Test / Replace
	Spark at wrong time or no spark. Fuel delivery timing incorrect.	Timing Wheel or CPS installed incorrectly, damaged, or dirty; faulty CPS	Install correctly, inspect for proper air gap (gap is preset but cover, sensor, and timing wheel must be clean and in good condition).
Poor idle	Excessively rich or lean fuel mixture	Air Leaks Air restriction in IAC Fuel Pump Fuel injector or fuel rail obstructed or leaking Air Filter Wrong Fuel / Old Fuel Crank Position Sensor	Inspect IAC system Inspect IAC hoses and fittings Inspect fuel pressure Replace Replace Inspect / Replace Inspect / Replace
Poor Running in Higher RPM Range	Air intake restriction Oil Overfilled Ignition problems Low Battery Voltage Loose, corroded, or wet connector(s) Valve train problems	Air filter - Ignition Coil(s) / plug wires Battery ECM and wiring harness Valve springs, valve, head	Inspect Inspect oil level and condition Refer to ignition section. Charge or replace Unplug connections - inspect Inspect cylinder head & valves

© 2009 Polaris Sales Inc.

FUEL SYSTEM TROUBLESHOOTING (cont.)

PROBLEM	POSSIBLE CAUSE	AFFECTED PART(s)	REPAIR RECOMMENDED
Engine Stalls	Fuel Pump Problem	Low battery voltage Faulty fuel pump No signal from ECM Wiring problem	Battery/Charging system Check fuel pressure Repair Wiring Repair/Chk Pump Relay
	Excessive rich or lean fuel/air mixture	TMAP Sensor Plugged fuel filter Fuel pump (pressure) Fuel pressure regulator Vacuum leak Wiring problem Air Filter Low battery voltage	Repair / Replace Replace Test / Replace Test / Replace Pump Assembly Repair / Replace hoses Repair Replace Ck battery & charging system
	Control Circuit/Sensors not functioning correctly	Fuel pressure regulator TPS Engine speed sensor Fuel pump relay Rotor Fuse ECM Relay Low battery voltage ECM	Test Pressure / Replace Test / Replace Test / Replace Test / Replace Inspect / Install correctly Replace Replace Inspect Charging system
	Valve train problems or Compression low	Refer to chapter 7	
Backfiring	Low Battery Voltage Ignition Problem Air leaks Restricted air intake or throttle body	Battery, spark plug fouled, poor wire connection for ignition or fuel injection, loose pin in multi-pin connector for ECM or wiring harness Inlet and Exhaust Intake tract / Throttle body	Refer to battery section Replace plugs / diagnose Inspect wiring connections Disconnect and check pin connections Seal intake or exhaust leaks Clean air inlet tract and throttle body

© 2009 Polaris Sales Inc.

FUEL SYSTEM TROUBLESHOOTING (cont.)

PROBLEM	POSSIBLE CAUSE	AFFECTED PART(s)	REPAIR RECOMMENDED
Poor Running in upper rpm ranges	Control Circuit/ Sensors not functioning correctly	Engine speed sensor TPS Air temperature sensor Manifold Absolute Pressure sensor Intermittent wiring / connector problem ECM	Test / Replace Test / Replace Test / Replace Test / Replace Repair/Replace Test / Replace
	Fuel delivery incorrect	Plugged or kinked fuel and/ or vent hoses Fuel pump Fuel regulator Fuel filter Battery/Charging System Fuel Injector plugged Contaminated fuel (water, additives, etc.) Inadequate octane Defective throttle valve Low battery voltage	Repair/Replace Test / Replace Test Pressure / Replace Test / Replace Charge/Replace Clean/Replace Clean/Replace Use correct fuel Replace throttle body Charging system
	Air intake restriction	Dirty Air Cleaner Intake restriction	Clean Repair
	Air Leak	Throttle body gasket surfaces Intake manifold Throttle body	Repair/Replace Repair/Replace Repair/Replace
Engine lacks power	Engine component problems Ignition problems Overfilled with oil	See chapter 7, 8 See chapter 17 See chapter 2	
	Improper fuel delivery	Plugged fuel injector TPS Dirty air cleaner Vacuum leaks Fuel pump Fuel pressure regulator Air temperature sensor Engine speed sensor TMAP sensor Plugged vent hose Low battery voltage ECM	Replace Inspect / Replace Replace Repair / Replace Test / Replace Test / Replace Test / Replace Test / Replace Test / Replace Charge Battery / Replace Test batt./Charging system Test / Replace

© 2009 Polaris Sales Inc.

FUEL SYSTEM TROUBLESHOOTING (cont.)

PROBLEM	POSSIBLE CAUSE	AFFECTED PART(s)	REPAIR RECOMMENDED
Engine overheats	Internal Engine Parts	Cooling System	Refer to chapter 4
	Lubrication & Cooling system	Cooling System	Refer to chapter 4
	Low or incorrect oil	Engine Oil	Refer to chapter 3
	Brakes dragging	Brake systems	Refer to chapter 15
	Drive belt too tight	Drive Belt	Refer to chapter 3
	Ignition timing incorrect	Ignition Coils	Refer to chapter 17
		Faulty coolant temperature sensor	Replace
		Faulty engine speed sensor	Replace
		Faulty ECM	Replace
	Spark plug(s)	Heat range incorrect	Replace
	Low battery voltage	Charging System	Refer to charging section
		Faulty Battery	Replace
		Faulty Wiring	Repair
	Lean Air/Fuel mixture	Fuel pressure regulator vacuum hose kinked or plugged	Repair/Replace
		Air leak	Repair
		Fuel injector plugged	Clean/Replace
		Coolant temperature sensor	Replace
		Vent hose plugged/ kinked	Repair
		Air leak at throttle body to manifold seal	Repair
Won't Accept New Calibration	Non-Current Calibration File Set		Go to Dealer website (Victory Re-Flash) and download the most current Victory Calibration File Set
	Low Battery Voltage		Attach Battery Charger During Re-Flash, and Re-Charge Battery When Re-Flash Is Completed
	Attempting Re-Flash Without Proper VIN, Calibration I.D. number, or calibration authorization code		Enter Authorization Code Sent With Accessory Kit

© 2009 Polaris Sales Inc.

CHAPTER 6
ENGINE REMOVAL & INSTALLATION

OVERVIEW - ENGINE REMOVAL 6.2
GENERAL 6.2
SPECIFICATIONS 6.2
SPECIAL TOOLS 6.3
TORQUE VALUES. 6.4
ENGINE MOUNTING - AIRBOX / MAIN FRAME ASSEMBLY 6.4
ENGINE MOUNTING - REAR SUB FRAME ASSEMBLY 6.5
ENGINE REMOVAL. 6.6
PREPARATION FOR REMOVAL 6.6
PRECAUTIONS 6.6
REMOVAL PROCEDURE. 6.6
INJECTOR REMOVAL 6.10
ENGINE INSTALLATION. 6.11
PREPARATION FOR INSTALLATION 6.11
INSTALLATION PROCEDURE. 6.11

© 2009 Polaris Sales Inc.

OVERVIEW - ENGINE REMOVAL

GENERAL

A floor jack or commercially available motorcycle engine lift or hoist is required for engine removal. Arrange for assistance when removing and installing the engine.

Once engine is removed from frame, an engine stand is recommended for engine disassembly and assembly.

Engine removal and installation methods may differ slightly depending on available equipment, but always be sure the engine and chassis are securely supported and secured at all times.

REQUIRES ENGINE REMOVAL FOR SERVICE	CAN BE SERVICED WITH ENGINE IN FRAME
Camshaft	Alternator
Camshaft Chain / Guide / Tensioner Blade	Cam Chain Tensioner
Crankcase Breather Reed Valve	Clutch
Crankshaft & Crankshaft Component Service	Fuel Injectors / Fuel Rail
Cylinder Heads	Gearshift Linkage (External)
Valve Covers	Ignition System
Oil Pump	Output Shaft Seal
Oil Pump Drive / Balance Shaft	Starter, Starter One-Way Clutch, Starter Torque Clutch,
Piston / Cylinder	Throttle Body
Transmission / All Internal Transmission Parts	Torque Compensator Assembly

SPECIFICATIONS

ENGINE WEIGHT and OIL CAPACITY	
Item	**Specifications**
Engine Dry Weight	Approximately 120 Kilograms (265 lbs)
Oil Capacity	Approximately 4.75 Liters (5.0 Quarts)

© 2009 Polaris Sales Inc.

SPECIAL TOOLS

1.) Motorcycle table lift with wheel vise (commercially available)

2.) Engine platform jack or platform lift (commercially available)

3.) Engine stand (commercially available)

4.) Engine Mounting Plates (PV-48737)

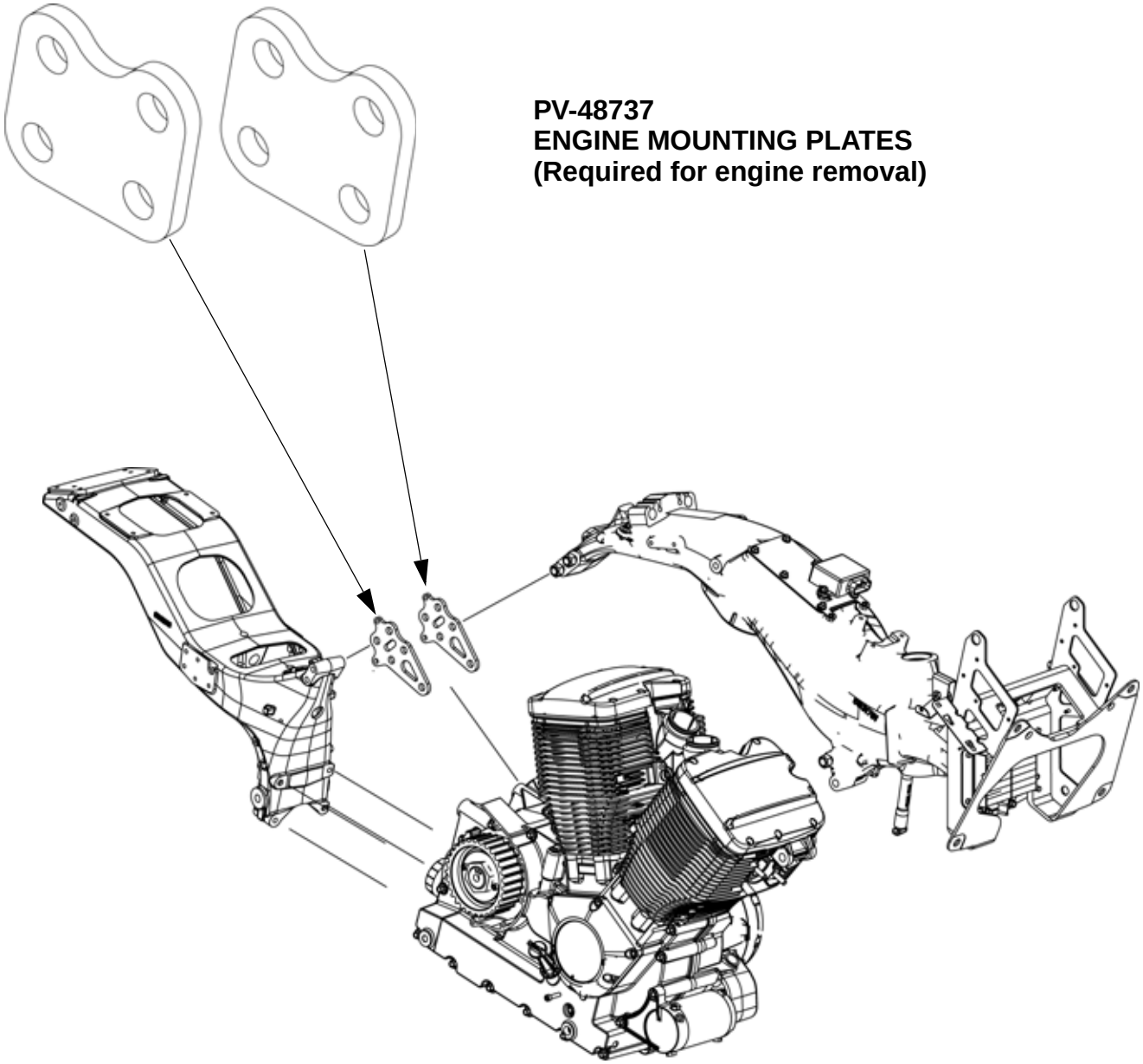

© 2009 Polaris Sales Inc.

TORQUE VALUES

ENGINE MOUNTING - AIRBOX / MAIN FRAME ASSEMBLY

= Apply Victory All Purpose Grease 2872187

ENGINE INSTALLATION
(See page 6.11 - 6.12 for procedure)

1. **Install all bolts in order A-D page 6.4 and 6.5. Do not tighten.**
2. **Torque bolts as specified in order 1 - 4**
3. **Refer to Chapter 3 for Body Panel Removal procedures and torque specifications.**

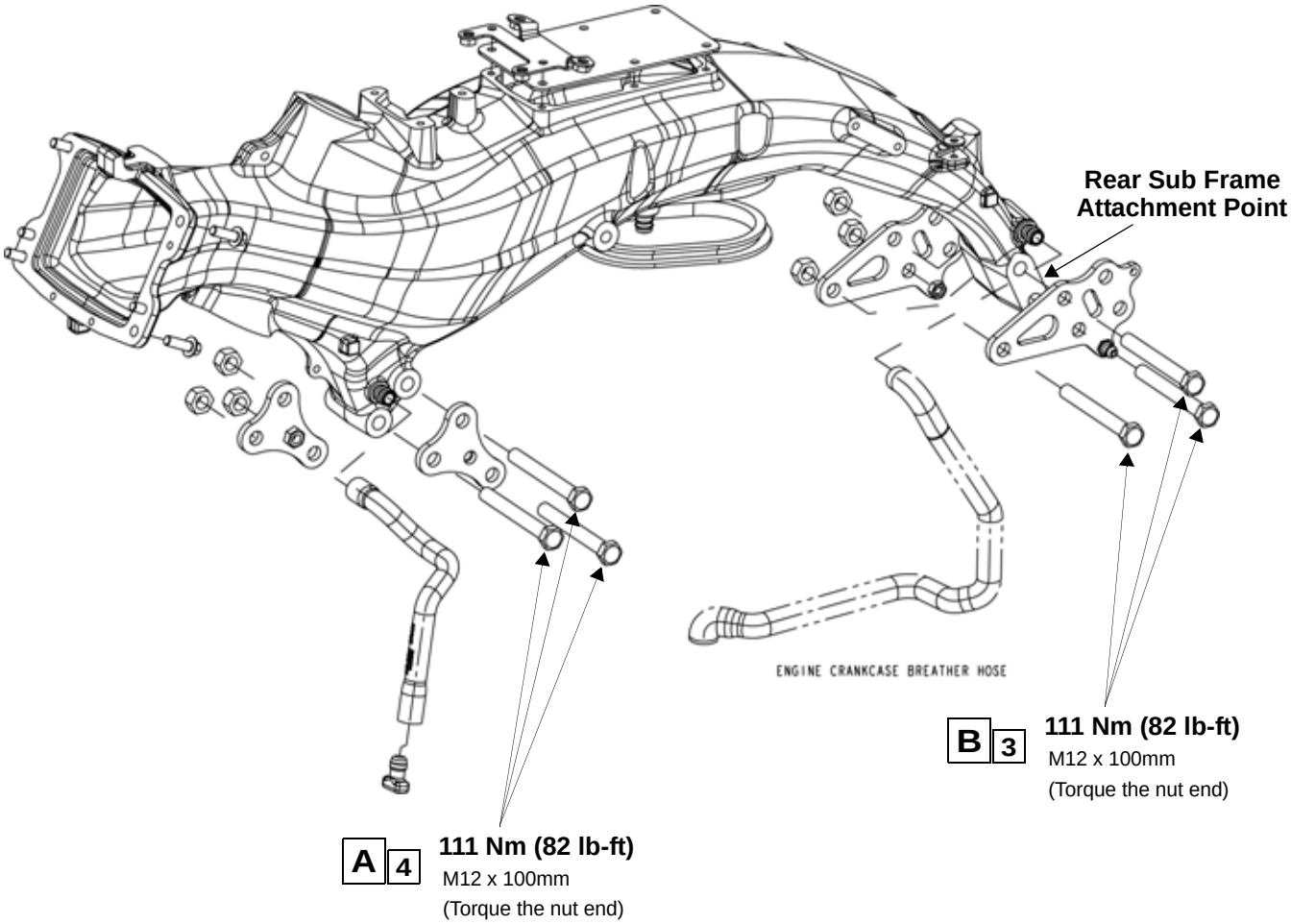

© 2009 Polaris Sales Inc.

ENGINE MOUNTING - REAR SUB FRAME ASSEMBLY

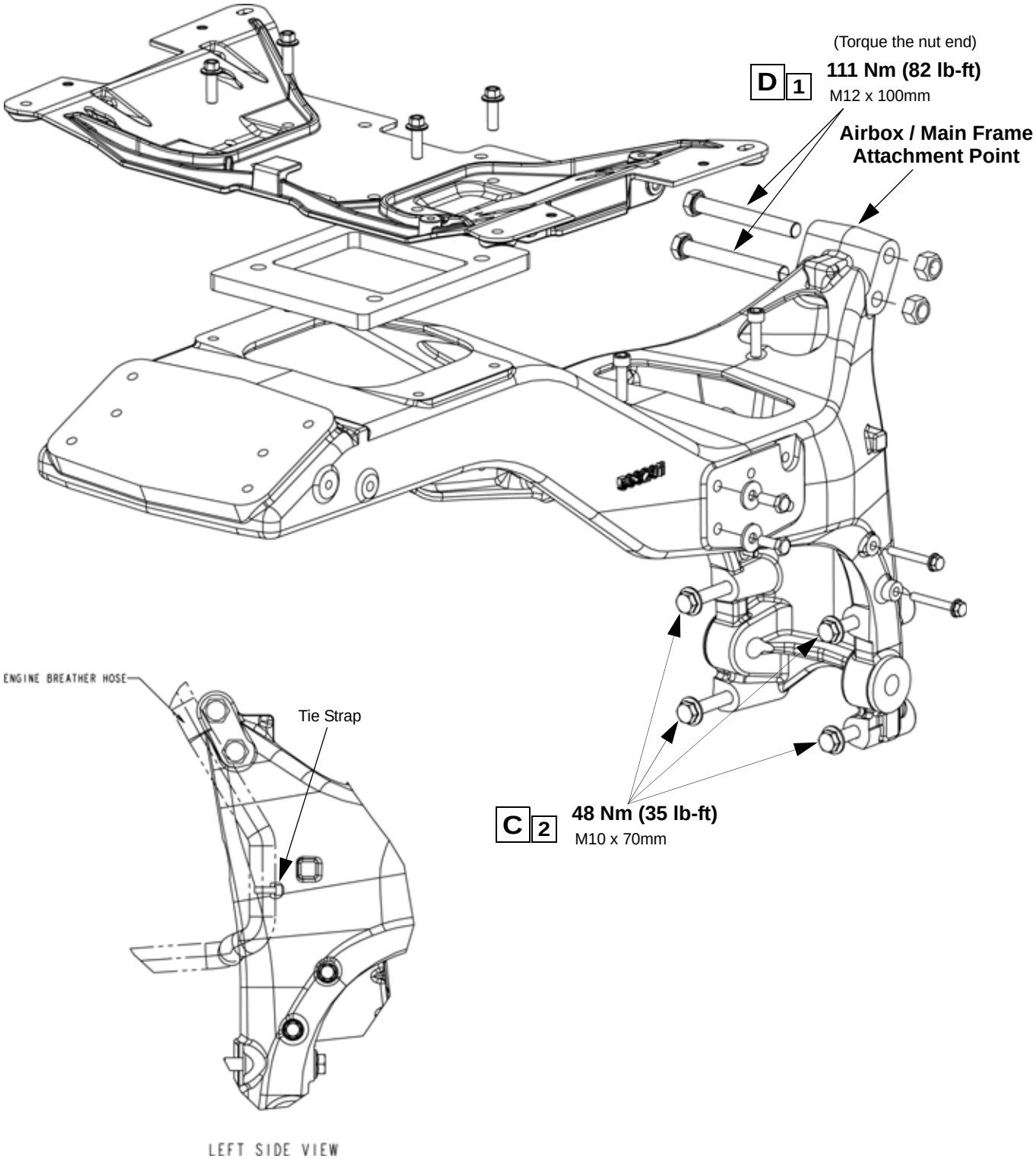

© 2009 Polaris Sales Inc.

ENGINE REMOVAL

PREPARATION FOR REMOVAL

A number of different methods can be used to remove the engine depending on the equipment available to the technician.

- Support motorcycle securely in an upright position during engine removal. Clamp front tire securely with lift bench wheel vise.

PRECAUTIONS

- Clean engine thoroughly before removal. Cover openings during and after engine removal.
- Note routing of wires, cables and hoses. Refer to routing diagrams in Chapter 1.

REMOVAL PROCEDURE

1. Completely drain fuel from fuel tank halves.
2. Disconnect battery cables (Chapter 2).
3. Remove front body work and seat (Chapter 3)
4. Remove bolt (A) then lever (B) from shift shaft.

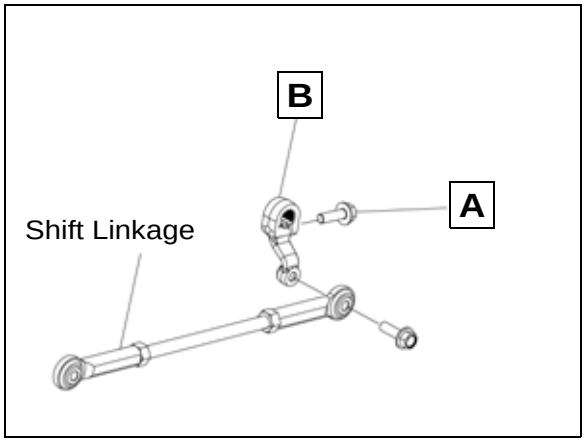

5. Remove LEFT floorboard assembly (C).

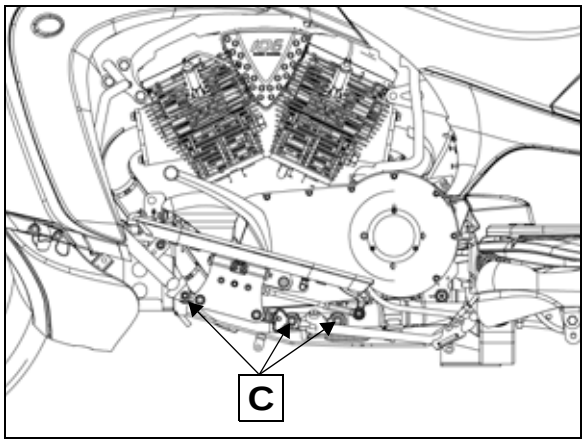

6. Remove RIGHT floorboard assembly (D).

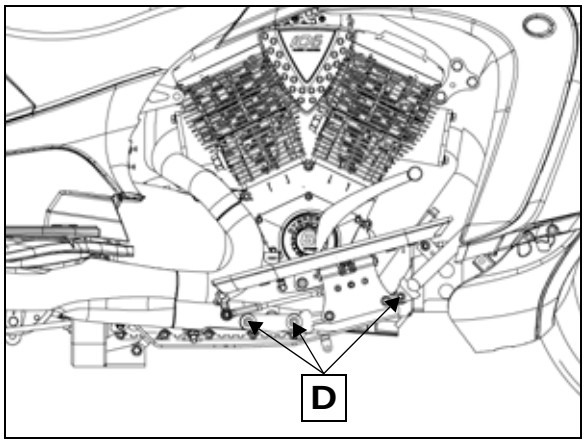

7. Remove rear master cylinder assembly (E) from floorboard mount (F) with all brake lines still attached. Support assembly off to the side. Do not allow assembly to hang from brake lines.

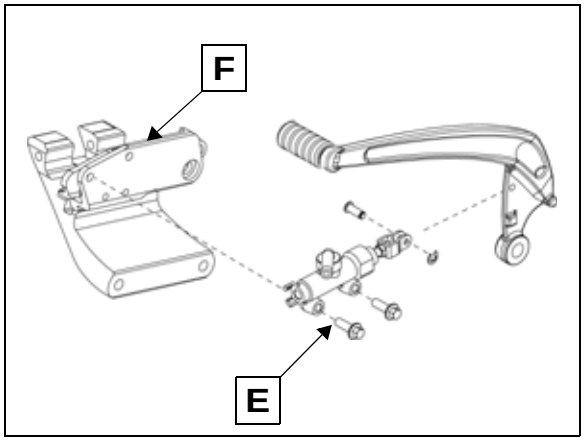

© 2009 Polaris Sales Inc.

8. Disconnect both O_2 sensors at the connector (*not at the sensor*) and remove exhaust system (Chapter 3).

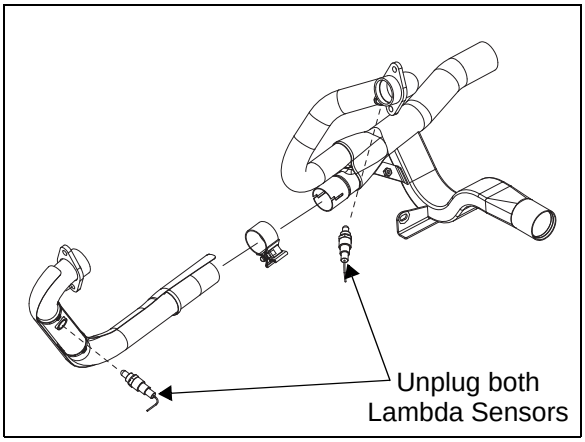

9. Loosen rear axle nut (G) about 3 turns. Loosen belt adjusters on each side about 2 turns. Tap wheel/axle forward to remove belt tension.

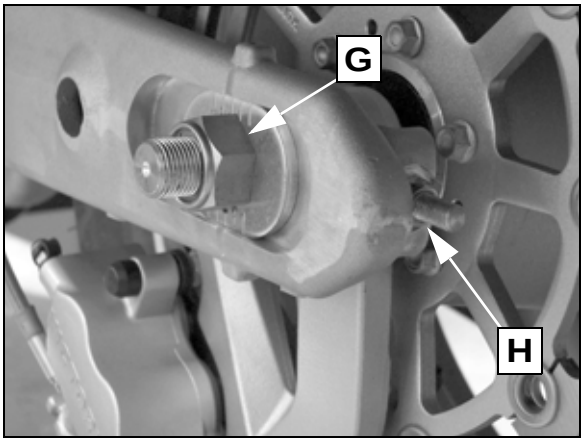

10. Remove reverse motor and gearbox (page 11.10), sprocket cover, and drive belt from sprocket.

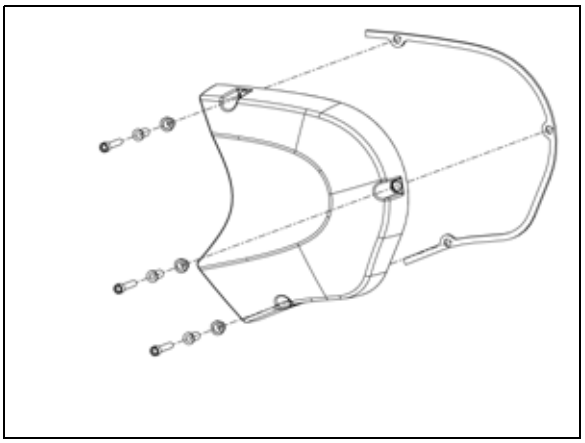

NOTE: Do not kink or twist the drive belt.

NOTE: If you plan to disassemble the engine crankcase, remove drive sprocket (Chapter 11).

11. Remove crankcase breather hose (I).

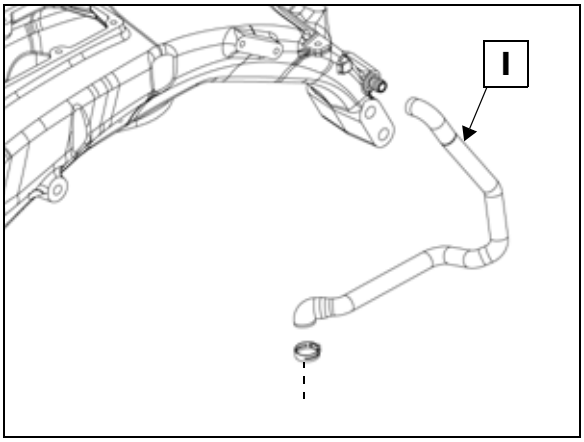

12. Rotate lifter arm inward and disconnect clutch pull rod (hydraulic clutch) or cable end (cable clutch).

13. Remove slave cylinder from crankcase (J).

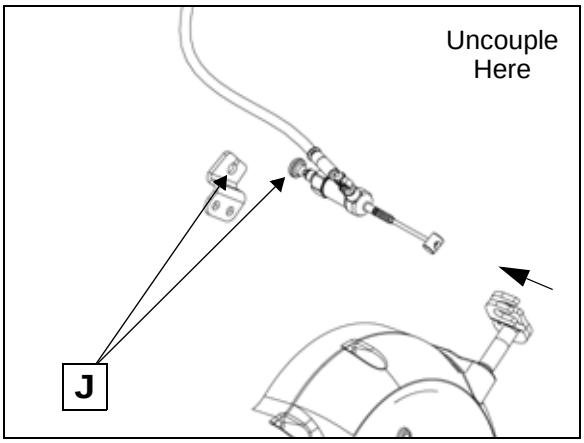

14. Slide lock lever (K) out. Pull ECM connector *straight out* of ECM. Disconnect harness ground wire (L).

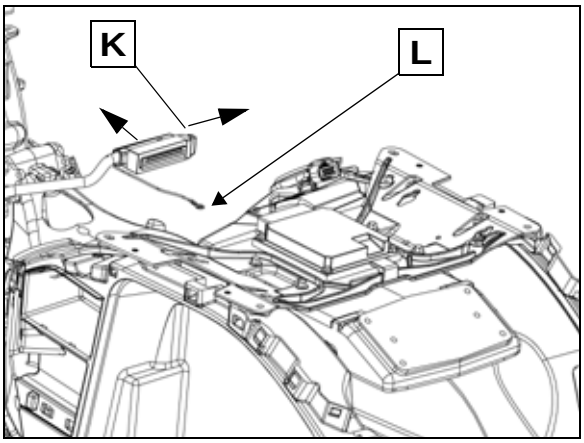

© 2009 Polaris Sales Inc.

15. Disconnect engine harness.

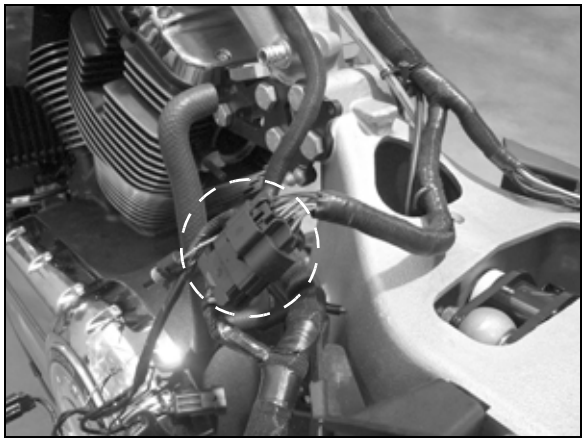

16. Disconnect diagnostic connector (M) and push harness and grommet (N) out of inner saddlebag to allow harness removal.

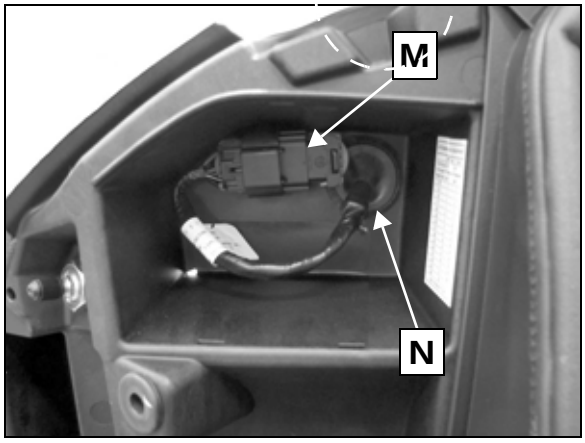

17. Remove fuel tanks (page 5.15).

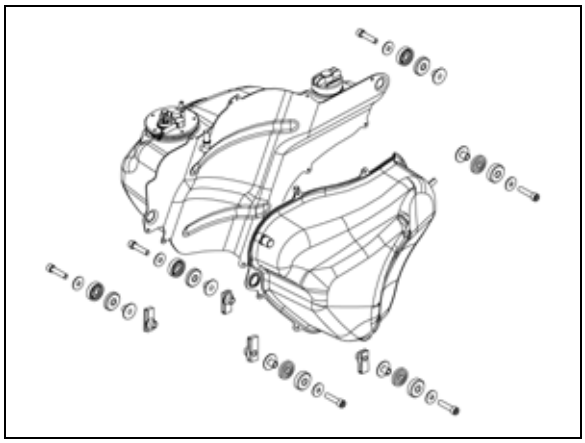

18. Remove the battery (page 2.20).

19. Unplug and remove regulator / rectifier (P).

NOTE: Regulator / Rectifier removal is not required, but it is recommended during engine removal to prevent from damaging the component.

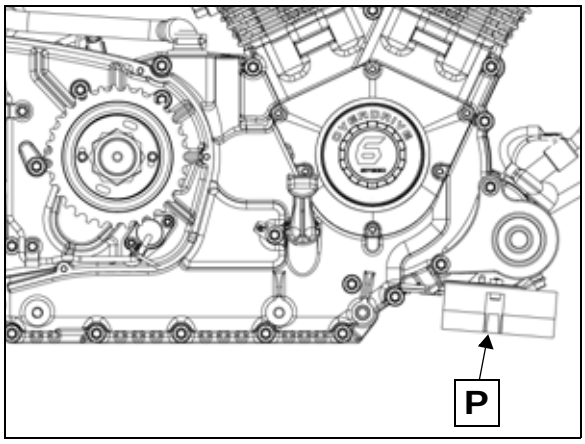

20. Disconnect positive (red) lead from main circuit breaker (Q) and negative (black) lead (and all other ground wires) from engine ground (R).

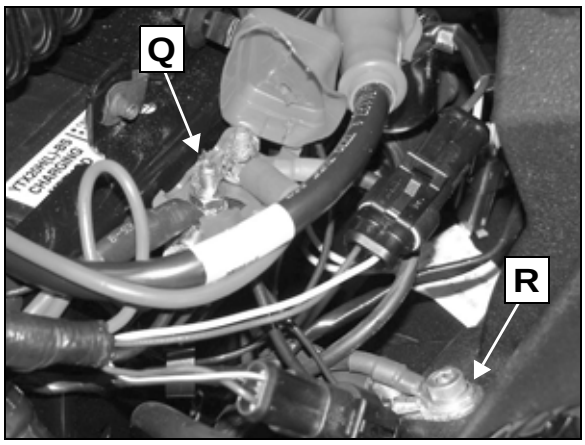

© 2009 Polaris Sales Inc.

21. Remove oil cooler mounting bolts (S).
22. Pull cooler out of grommet (T) for removal with engine.

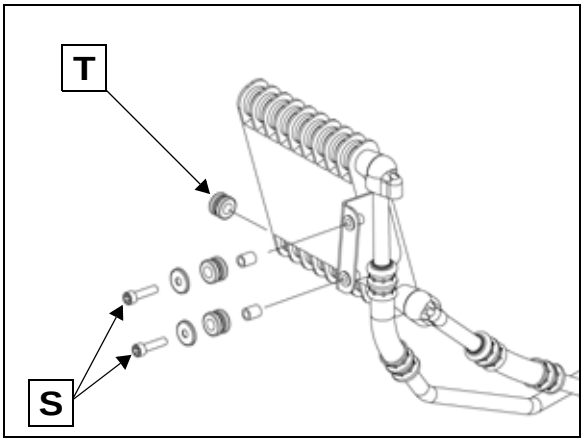

23. Remove positive cable from starter motor.
24. Unbolt brake switch from front sub frame and rear brake line bracket from rear of engine crankcase.

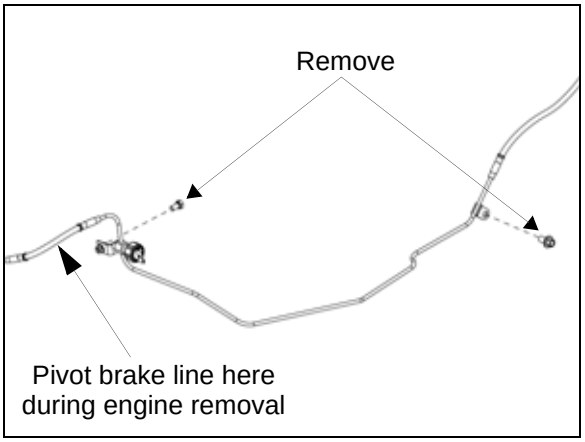

25. Remove (2) bolts from front sub frame. Support sub frame as to prevent pulling or damaging brake line(s).

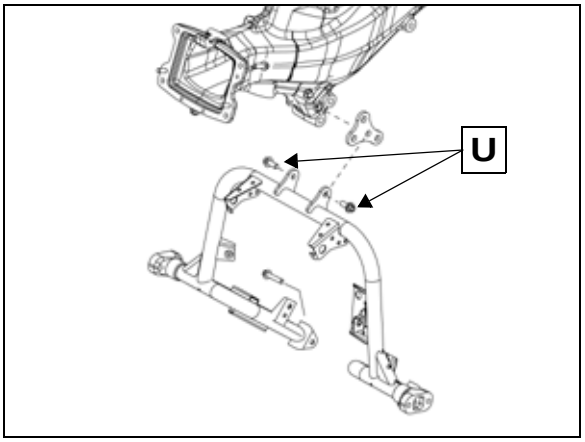

26. Remove upper rear engine mount bolts and plates (V).

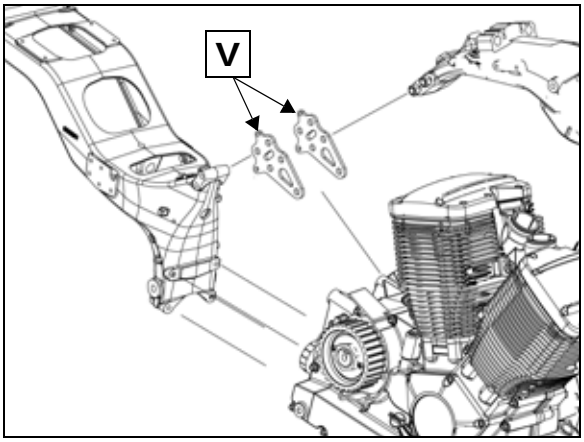

27. Install Engine Mounting Plates PV-48737 in place of original mount plates (page 6.3).

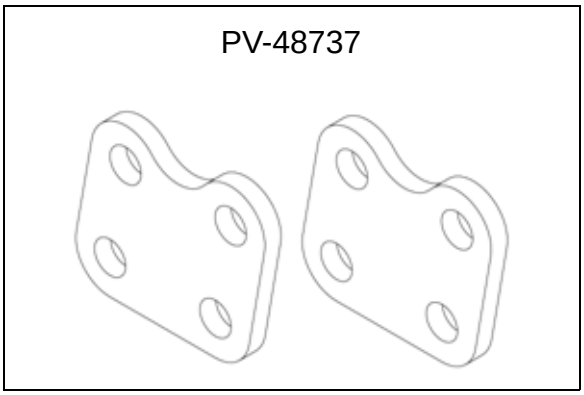

28. Support bottom of engine with a platform jack or platform lift (commercially available).
29. Remove bolts (W) retaining rear sub frame to engine.

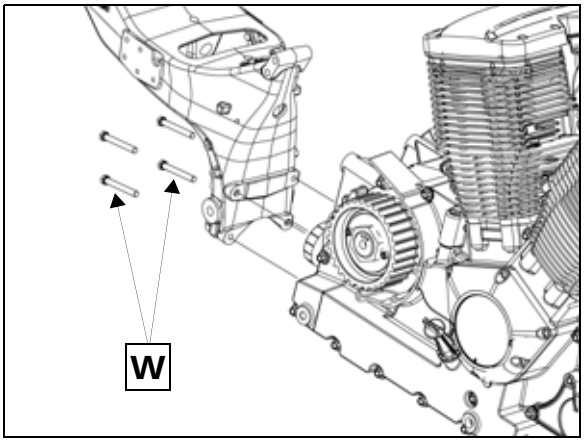

© 2009 Polaris Sales Inc.

30. Remove the right-hand side cover and disconnect the cables from the throttle body (dark cable is pull cable and located on the bottom). Lift cruise control cable out of bracket and disconnect.

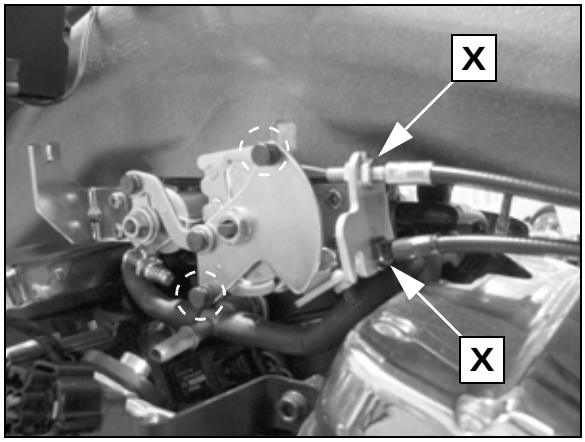

31. Remove upper front engine mount bolts and plates.

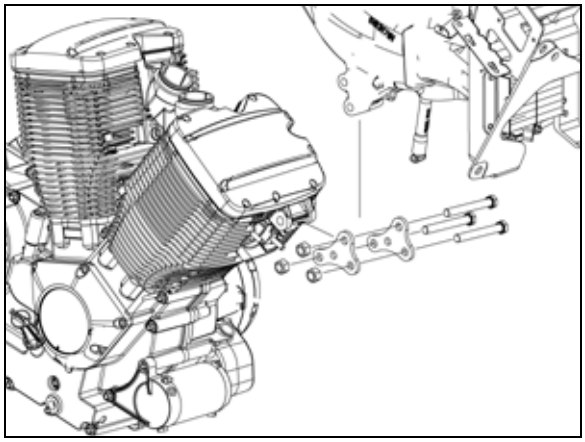

32. Pull engine harness through rear portion of LEFT fairing leg support (Y) to allow engine harness to remain with engine.

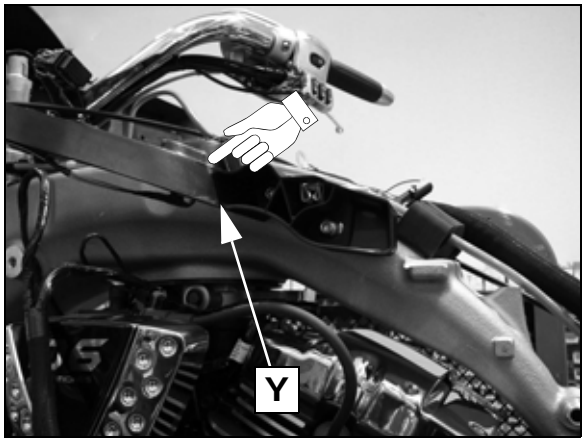

33. When all fasteners have been removed, ensure all hoses, wiring, and other components have been disconnected or removed to allow engine removal.

34. Slowly lower engine and move it forward slightly to release engine from rear crankcase alignment pins.

NOTE: Move rear brake line as needed to clear engine during removal. Take care not to damage the rear brake line.

35. When engine is free of rear sub frame, carefully lower it enough to allow throttle body adaptor to clear the airbox/frame assembly.

36. Remove engine out RIGHT side of chassis.

NOTE: Attach engine securely to an engine stand to prevent damage and for ease of disassembly. Use spacers as needed for stand you are using. If crankcases will be separated, use two left crankcase mounts (Z) only.

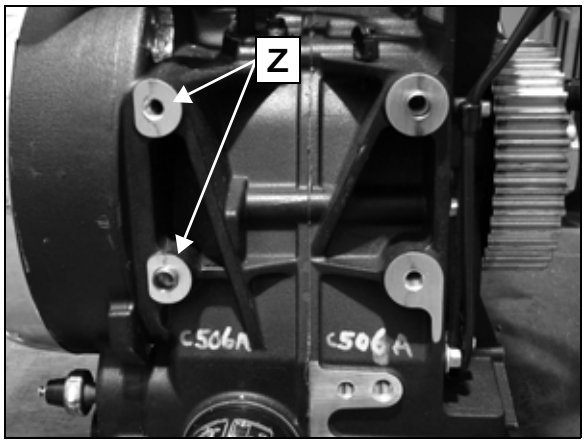

INJECTOR REMOVAL

IMPORTANT: Debris could have collected in and around injector cavities. If injector removal is required, clean cavity and surrounding area with compressed air before removing injectors. If removed, injectors must be indexed properly to the fuel rail (aligned) to ensure proper spray pattern (Chapter 5).

© 2009 Polaris Sales Inc.

ENGINE INSTALLATION

PREPARATION FOR INSTALLATION

Refer to page 6.4 - 6.5 for torque values and assembly views.

Refer to routing diagrams in Chapter 1 for locations and electrical connectors.

> **CAUTION**
>
> Arrange for assistance when installing engine. The engine must be held securely to prevent damage to engine, frame, wiring, or hoses. The engine is very heavy and could cause severe personal injury if not handled properly. Be sure engine is properly supported before proceeding.

IMPORTANT: Be sure alignment dowel pins are in place on rear sub frame or rear portion of engine crankcase.

INSTALLATION PROCEDURE

1. Clean mating surfaces of rear sub frame and engine crankcase. Grease the dowel pins.
2. Slide and rotate engine into frame through RIGHT side and position engine to center of frame.
3. Raise engine and start throttle body adaptor into airbox/frame assembly seal.

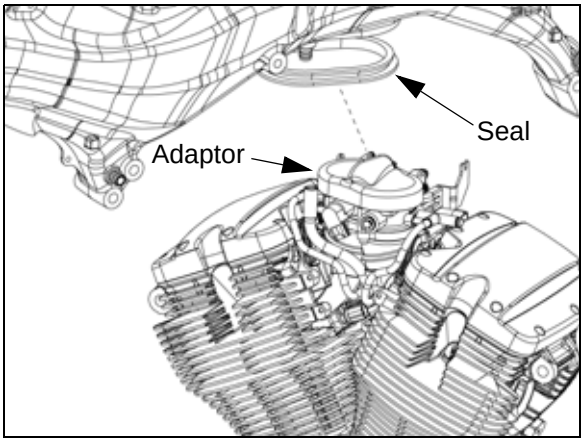

4. Slide engine back onto dowel pins and adjust engine height as needed to align the pins and fully seat the throttle body into the airbox/frame seal.

> **CAUTION**
>
> Be sure engine is aligned at the proper height and angle with the dowel pins. DO NOT force engine alignment using the mounting bolts, or the rear sub frame and dowel pins may be damaged!
> Adjust engine height and angle continuously as required while drawing up the bolts.

5. Tighten (4) rear sub frame bolts evenly until engine is drawn flat against sub frame, but do not torque at this time.
6. Properly route all hoses, wiring and other components before installing engine mounting hardware.
7. Install front cylinder engine mounting plates and loosely install bolts.
8. Remove Engine Mounting Plates (PV-48737).
9. Install original rear cylinder engine mounting plates and tighten bolts evenly, but do not torque at this time.
10. Torque engine mounting bolts in following order:
    1. (4) Rear sub frame bolts (page 6.5)
    2. (5) Rear cylinder engine mounting bolts (page 6.4)
    3. (3) Front cylinder engine mounting bolts (page 6.4)
11. Remove platform jack or platform lift.
12. Route engine harness through rear portion of LEFT leg fairing support.
13. Reinstall throttle cables onto cable bracket and adjust free play (Chapter 2).
14. Install starter motor lead and torque to **6.8 Nm (60 lb-in)**.

© 2009 Polaris Sales Inc.

15. Install front sub frame. Torque upper mounting bolts to **25.8 Nm (19 lb-ft)**.

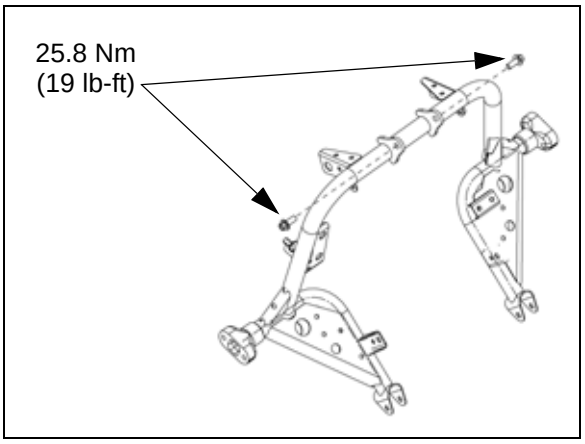

16. Install brake line to engine crankcase and brake switch to front sub frame. Torque to **8.5 Nm (87 lb-in)**.

17. Install oil cooler onto sub frame and torque mounting bolts to **9.6 Nm (85 lb-in)**.

18. Install regulator/rectifier to engine (if removed). Torque fasteners to **9.6 Nm (85 lb-in)**.

19. Install ground wires to engine. Torque screw to **9.6 Nm (85 lb-in)**. Install positive regulator / rectifier wire to circuit breaker. Torque nut to **2.8 Nm (25 lb-in).**

20. Install battery (page 2.20).

21. Install fuel tanks (page 5.15). Torque (6) fuel tank mounting bolts to **47.5 Nm (35 lb-ft)**.

22. Install diagnostic connector harness and connect engine harness to main harness.

23. Connect engine harness to the ECM and attach ECM ground wire.

24. Install clutch slave cylinder or cable bracket to crankcase. Torque screws to **8.5 Nm (87 lb-in)**.

25. Install engine breather hose and secure clamps.

26. Install drive sprocket (if removed). Torque to **244 Nm (180 lb-ft)**. (See Chapter 11).

27. Install drive belt and sprocket cover. Torque cover bolts to **9.6 Nm (85 lb-in)**.

NOTE: Drive belt is installed with "VICTORY" readable from right side. Do not kink or twist the drive belt.

28. Adjust belt tension and tighten axle nut (page 2.24).

29. Install exhaust system and connect O_2 sensors (page 3.45).

30. Install rear master cylinder onto brake pedal support. Torque mounting bolts to **24.4 Nm (18 lb-ft)**.

31. Install right and left floorboard assemblies. Torque cradle to sub frame bolts to **25.8 Nm (19 lb-ft)** and cradle to engine bolts to **47.5 Nm (35 lb-ft)**.

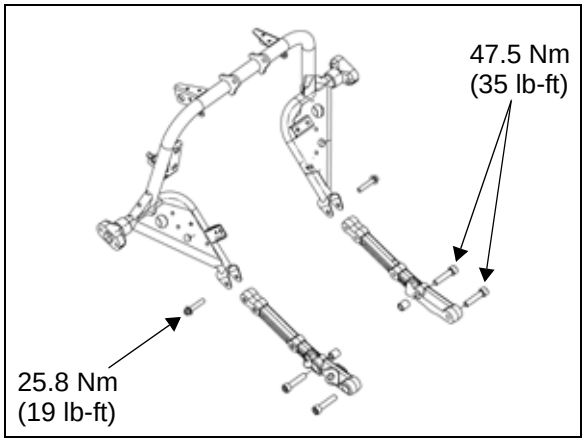

32. Install shift arm onto shift shaft. Install retaining bolt and torque to **9.5 Nm (7 lb-ft)**.

33. Install front body work and seat (Chapter 3).

34. Apply dielectric grease to battery terminals and connect battery cables. Torque terminal bolts to **4.5 Nm (40 lb-in).**

35. Install new oil filter and fill crankcase to proper level with Victory engine oil (Chapter 2).

36. Inspect operation of all controls and adjust as necessary (Chapter 2).

37. Add fuel to fuel tank and prime fuel system (page 5.11).

38. Start engine and inspect for oil leaks.

39. Test brakes to be sure operation and pedal pressure are normal.

40. Test ride motorcycle; check all systems for proper operation.

41. When test ride is completed, check entire vehicle and engine for fluid leaks.

42. Inspect oil level and adjust if necessary.

© 2009 Polaris Sales Inc.

CHAPTER 7
CYLINDER HEAD & VALVE TRAIN

GENERAL INFORMATION 7.2
IMPORTANT NOTES 7.2
SPECIAL TOOLS 7.2
DATA - CYLINDER HEAD 7.3
SPECIFICATIONS 7.3
TORQUE VALUES AND ASSEMBLY VIEWS 7.4
CAM DRIVE & VALVE COVER 7.4
CAMSHAFT CARRIER / ROCKER ARM - 2008 . . . . . 7.5
CAMSHAFT CARRIER / ROCKER ARM - 2009 . . . . . 7.6
CYLINDER HEAD 7.7
CAMSHAFT TIMING QUICK REFERENCE 7.8
CYLINDER HEAD SERVICE 7.9
CAMSHAFT DRIVE COVER 7.9
VALVE COVER REMOVAL 7.9
VALVE COVER INSTALLATION 7.9
CAM CHAIN TENSIONER REMOVAL 7.9
CAM CHAIN TENSIONER INSPECTION 7.10
CAM CHAIN TENSIONER INSTALLATION 7.10
CAMSHAFT CHAIN & SPROCKET REMOVAL 7.11
ROCKER ARM REMOVAL - 2008 . . . . . 7.12
ROCKER ARM & SHAFT INSPECTION - 2008 . . . . . 7.12
CAMSHAFT INSPECTION - 2008 . . . . . 7.13
CAMSHAFT CARRIER REMOVAL - 2009 . . . . . 7.14
ROCKER ARM & SHAFT INSPECTION - 2009 . . . . . 7.14
CAMSHAFT INSPECTION 7.15
CYLINDER HEAD REMOVAL - 2008 . . . . . 7.16
CYLINDER HEAD REMOVAL - 2009 . . . . . 7.16
CYLINDER HEAD DISASSEMBLY 7.17
CYLINDER HEAD INSPECTION 7.18
VALVE SPRING FREE LENGTH INSPECTION 7.18
VALVE INSPECTION 7.18
VALVE INSPECTION 7.20
VALVE GUIDE REMOVAL / INSTALLATION 7.21
VALVE SEAT INSPECTION 7.22
VALVE SEAT RECONDITIONING 7.22
CYLINDER HEAD ASSEMBLY 7.23
CYLINDER HEAD ASSEMBLY 7.24
CYLINDER HEAD INSTALLATION - 2008 . . . . . 7.25
CAMSHAFT / ROCKER INSTALLATION - 2008 . . . . . 7.26
CYLINDER HEAD INSTALLATION - 2009 . . . . . 7.27
CAMSHAFT TIMING - REAR CYLINDER 7.30
CAMSHAFT CHAIN GUIDE INSTALLATION 7.30
CAMSHAFT TIMING - FRONT CYLINDER 7.31
TROUBLESHOOTING, CYLINDER HEAD AND VALVE TRAIN 7.34

© 2009 Polaris Sales Inc.

GENERAL INFORMATION

IMPORTANT NOTES

- This section covers service of the cylinder heads, camshafts, cam chains and tensioners, cam chain guides and rocker arms. Cam chain tensioners can be serviced with the engine in the frame. Most other cylinder head components require engine removal.
- Refer to Chapter 6 for engine removal and installation.
- If cylinder heads are removed the cylinder base gasket must be replaced also.
- Head and base gasket replacement is recommended on 2009-2010 models if camshaft carrier fasteners are loosened or removed. The 1-piece camshaft carrier design on these engines uses common fasteners for the carrier, the cylinder head, and the cylinder.
- Mark and store all mating parts for correct engine assembly.
- Use Moly Assembly Paste P/N 2871460 or Victory Semi-Synthetic 20W/40 Engine Oil P/N 2872176 to lubricate parts where indicated.
- Handle and store all parts in such a way that they will not be damaged or contaminated.
- Some fasteners have a pre-applied locking agent, and must be replaced if loosened or removed. Always replace fasteners that have a pre-applied locking agent or as directed in this service manual.
- There are some precision machining steps to be performed in this section. If you are not sure of your capabilities in these areas, have a competent machinist perform these operations.
- Valve guide and seat reconditioning should be performed by a technician proficient in cylinder head reconditioning techniques using high quality equipment with grinding stones or precision carbide cutters. Do not attempt cylinder head repair without the proper equipment or experience in cylinder head reconditioning techniques.
- The intake and exhaust valves cannot be re-faced.
- Cleanliness of parts is critical to engine life and accurate parts inspection. Use clean solvent to clean all disassembled parts. Dry parts with compressed air and lubricate before engine inspection and engine assembly.

SPECIAL TOOLS

- Valve Spring Compressor PV-1253 or PV-4019 with adapter PV-43513-A
- Crankshaft Rotation Socket PV-48736
- 8mm or 5/16 pin punch (Commercially available)
- Engine lock Tool: PV-43502-A

© 2009 Polaris Sales Inc.

DATA - CYLINDER HEAD

SPECIFICATIONS

CYLINDER HEAD - 2008 - 2010		
	Valve Train	Single Overhead Cam / 4 valves per cyl 2 Intake valves / 2 Exhaust valves
	Intake Valve Opens At 1 mm Lift	1° BTDC
	Intake Valve Closes At 1 mm Lift	27° ABDC
	Exhaust Valve Opens At 1 mm Lift	33° BBDC
	Exhaust Valve Closes At 1 mm Lift	-5° ATDC (5° BTDC)
	Max Lobe Lift (In / Ex)	7.26 mm / 7.07mm
	Max Valve Lift (In / Ex)	10 mm / 10 mm

CYLINDER HEAD & VALVE TRAIN - 2008 / 2009-2010			
Item		**Standard**	**Service Limit**
Cam Chain Tensioner	(Hydraulic)	-	-
Cam Shaft	Lobe Height IN EX	40.259 mm (1.5850") 40.060 mm (1.5772")	40.159 mm (1.5811") 40.02 mm (1.5732")
	Oil Clearance	.036 mm to .086 mm (.0014" to .0034")	
2008	Journal O.D.	23.96 - 23.98 mm (.943 - .944")	23.93 mm (.942")
2009 - 2010	Journal O.D. (Small)	23.96 - 23.98 mm (.943 - .944")	23.93 mm (.942")
2009 - 2010	Journal O.D. (Large)	48.464 - 48.484 mm (1.9080 - 1.9088")	48.434 mm (1.9068")
Cylinder Head	Warpage (Distortion)	-	.10 mm max. (.004")
Rocker Arm, Shaft, & Lifter	Rocker Arm Bore I.D. In/Ex	12.01 - 12.03 mm (.473 - .474")	12.065 mm (.475")
	Rocker Arm Shaft O.D. In/Ex	11.974 - 11.986 mm (.471-.472")	11.944 mm (.470")
	Rocker Arm to Rocker Arm Shaft Clearance In/Ex	.024 - .056 mm (.001 - .0022")	.156 mm (.006")
Valve, Valve Guide, Valve Seat	Valve Clearance	Hydraulic/Self Adjusting	-
	Valve Guide Installed Height (See illustration on page 7.23)	12.2-12.8 mm (.480-.504")	41.40 mm (1.630")
	Valve Stem O.D. In Ex	6.953 - 6.973 mm (.2737 - .2745") 6.950 - 6.970 mm (.273 - .274")	6.933 mm (.2729") 6.928 mm (.2727")
	Valve Stem Deflection	-	.13 mm max. (.005")
	Valve Seat Width Intake	1.2 mm (.047")	-
	Valve Seat Width Exhaust	1.75 mm (.068")	-
	Valve Stem Runout	-	.13 mm max. (.005")
	Valve Head Radial Runout	-	.05 mm max. (.002")
	Valve Installed Height (See illustration on page 7.23)	INTAKE: 49.31 - 50.31 mm (1.941 - 1.981") EXHAUST: 48.78 - 49.78 mm (1.920 - 1.960")	--
Valve Spring	Free Length In/Ex	43.36 mm (1.708")	41.40 mm (1.630")
	Intake Valve Maximum Lift	10.0 mm (.393")	--
	Exhaust Valve Maximum Lift	10.0 mm (.393")	--
	Spring Installed Height (See illustration on page 7.23)	34.20 - 36.20 mm (1.346 - 1.425")	--

© 2009 Polaris Sales Inc.

TORQUE VALUES AND ASSEMBLY VIEWS

CAM DRIVE & VALVE COVER

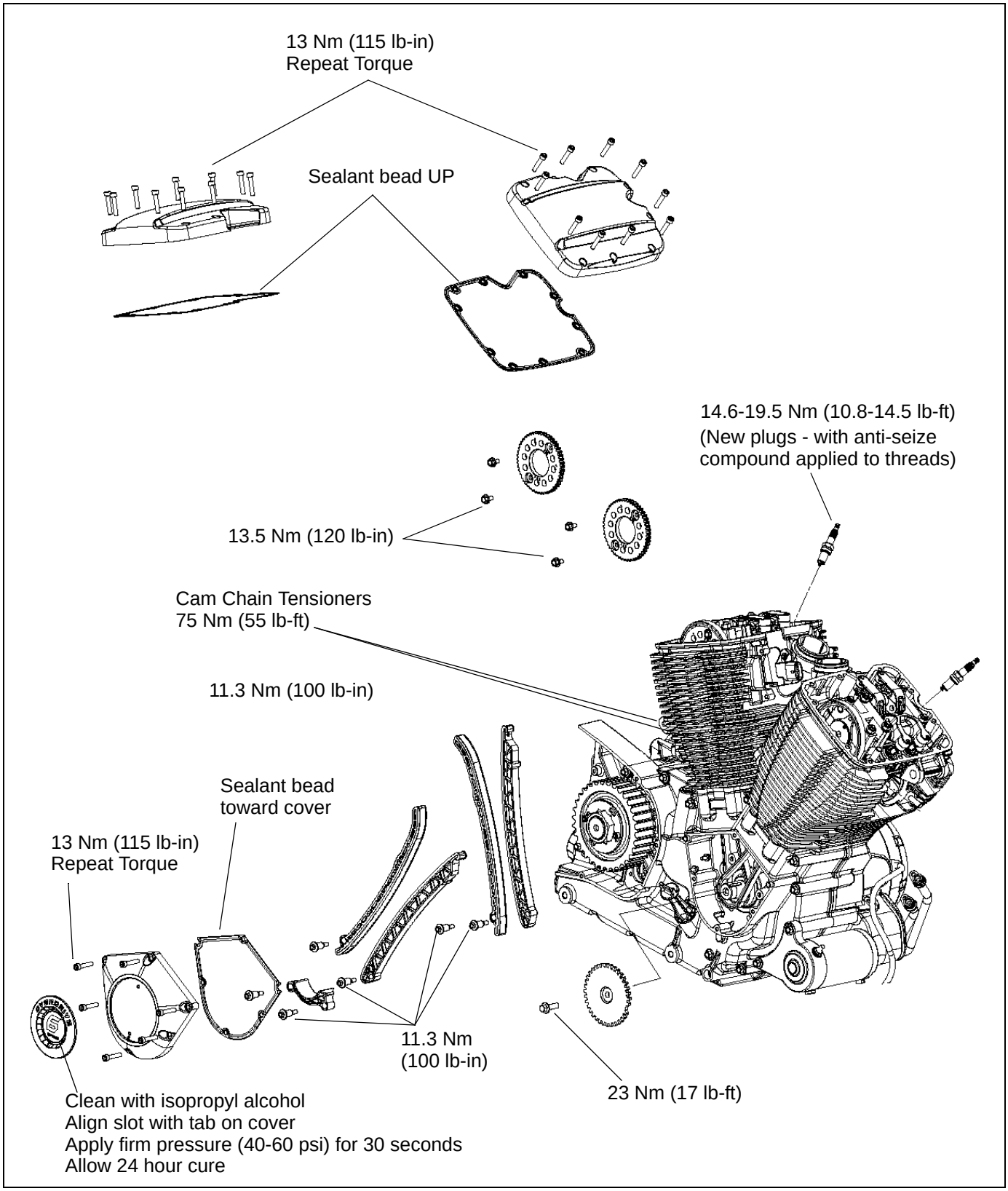

© 2009 Polaris Sales Inc.

CAMSHAFT CARRIER / ROCKER ARM: 2008

NOTES

1 Apply Moly Assembly Paste (PN 2871460)

Upper carrier half must be loose to allow upward movement when cylinder head nuts are torqued. (See Cylinder Head Installation on page 7.25)

After cylinder head nuts have been torqued, torque upper cam carrier as follows:

- Lubricate nuts and washers with engine oil
- Tighten slowly and evenly or cam holder assembly may crack
- Follow sequence shown below
- Torque to 24.5 Nm (18 lb-ft) to seat upper carrier
- Torque to 27 Nm (20 lb-ft) final torque

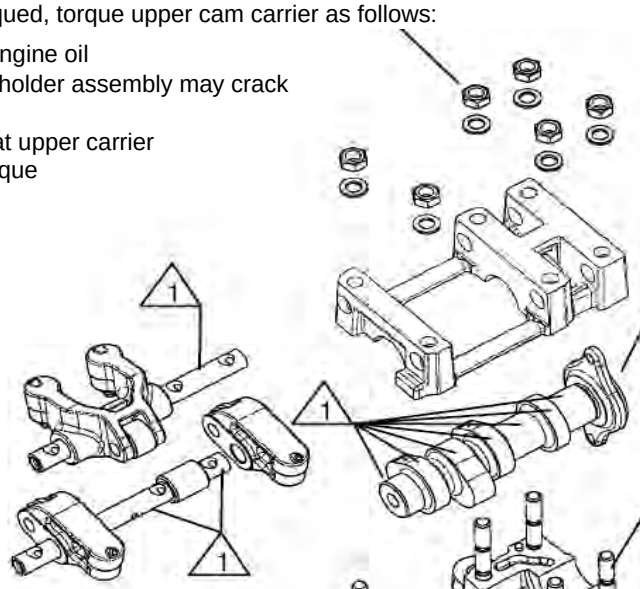

After assembly, rotate cams back and forth slightly to verify free rotation. Allow time for lifters to bleed down before performing this inspection

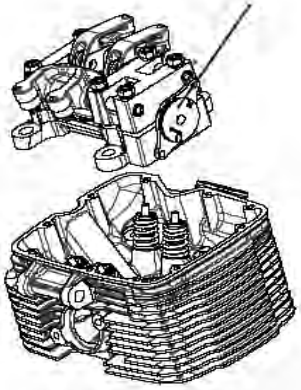

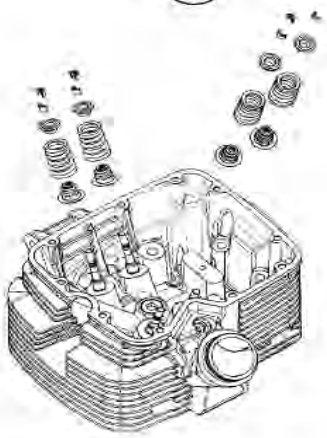

CAM CARRIER TORQUE SEQUENCE

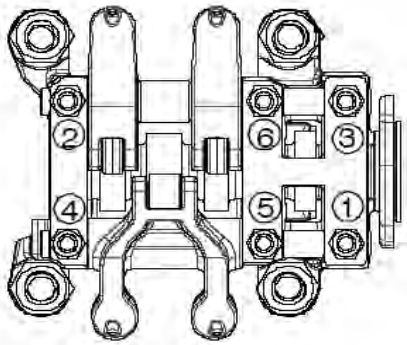

© 2009 Polaris Sales Inc.

CAMSHAFT CARRIER / ROCKER ARM - 2009 - 2010

FRONT 2009-2010

After assembly, rotate cams back and forth slightly to verify free rotation. Allow time for lifters to bleed down before performing this inspection.

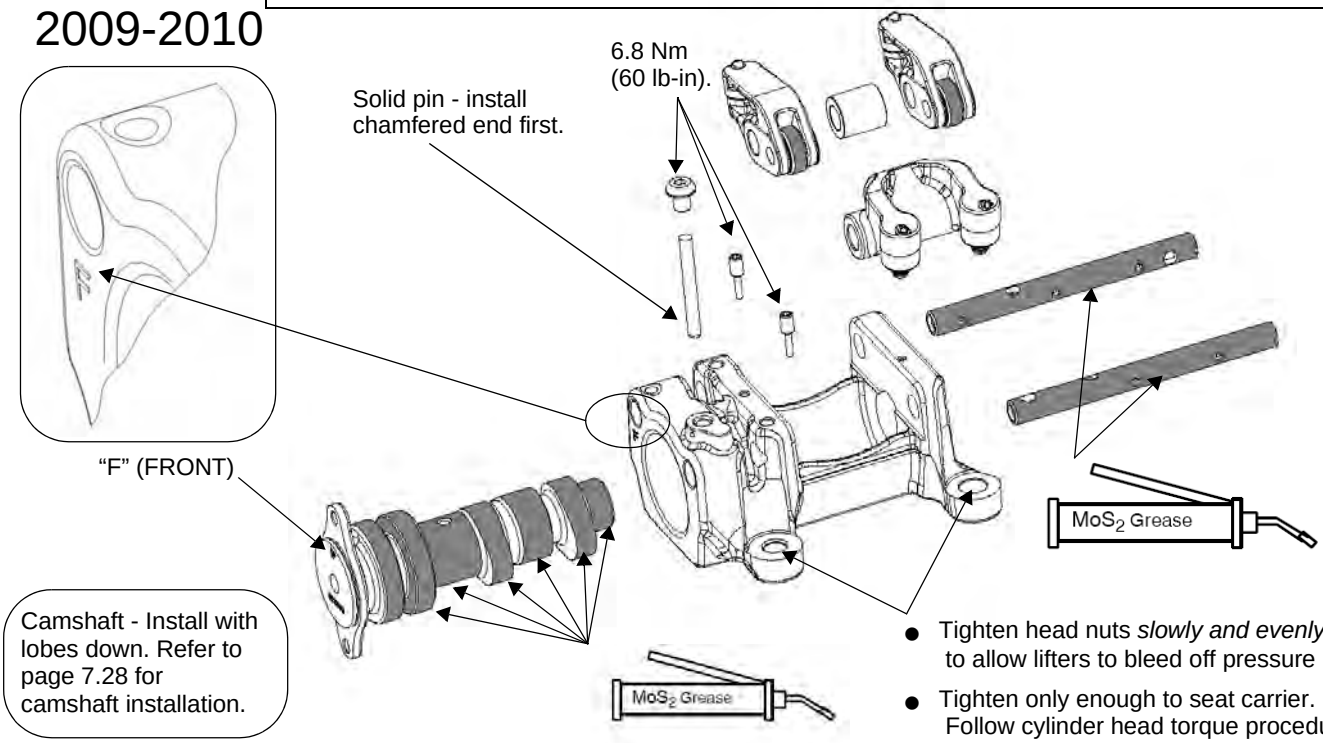

- Tighten head nuts *slowly and evenly* to allow lifters to bleed off pressure
- Tighten only enough to seat carrier. Follow cylinder head torque procedure on page 7.28 - 7.29.

REAR 2009-2010

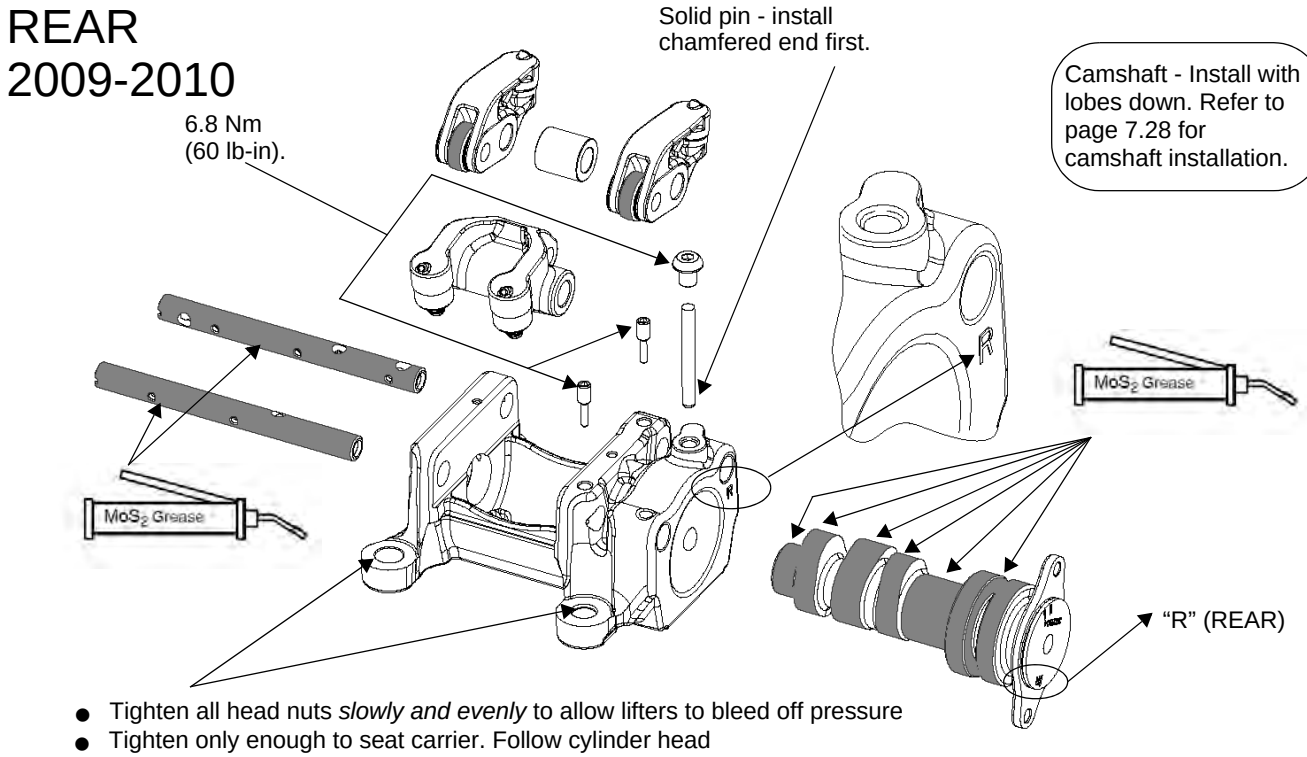

- Tighten all head nuts *slowly and evenly* to allow lifters to bleed off pressure
- Tighten only enough to seat carrier. Follow cylinder head torque procedure on page 7.26.

© 2009 Polaris Sales Inc.

CYLINDER HEAD

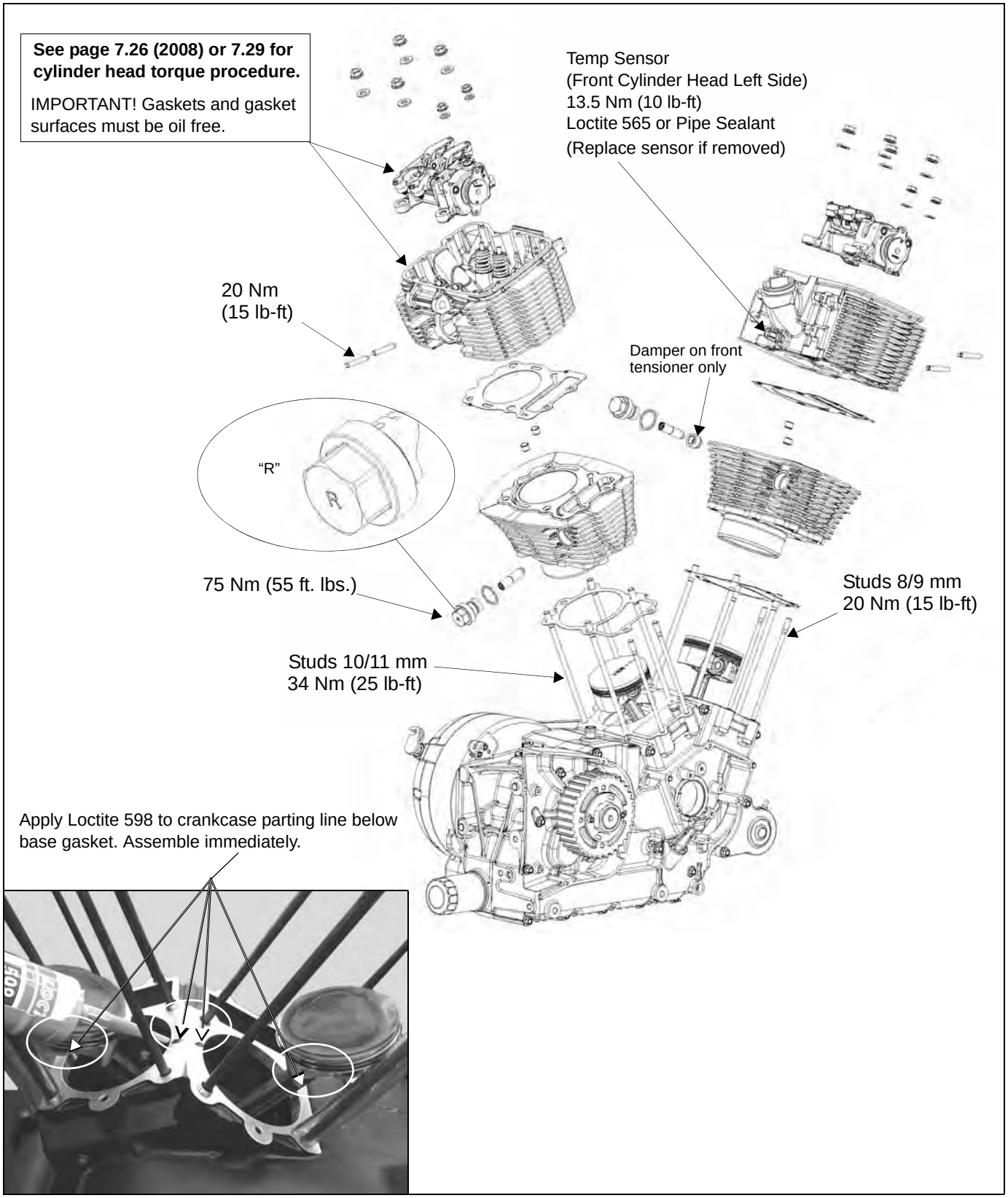

© 2009 Polaris Sales Inc.

CAMSHAFT TIMING QUICK REFERENCE

Use this page as a reference ONLY if you are familiar with the cam timing procedure.

Refer to Page 7.30 for complete camshaft timing procedure

The illustration below shows final cam timing configuration.
The rear cylinder has been timed and the crankshaft rotated 410__ from rear TDC.

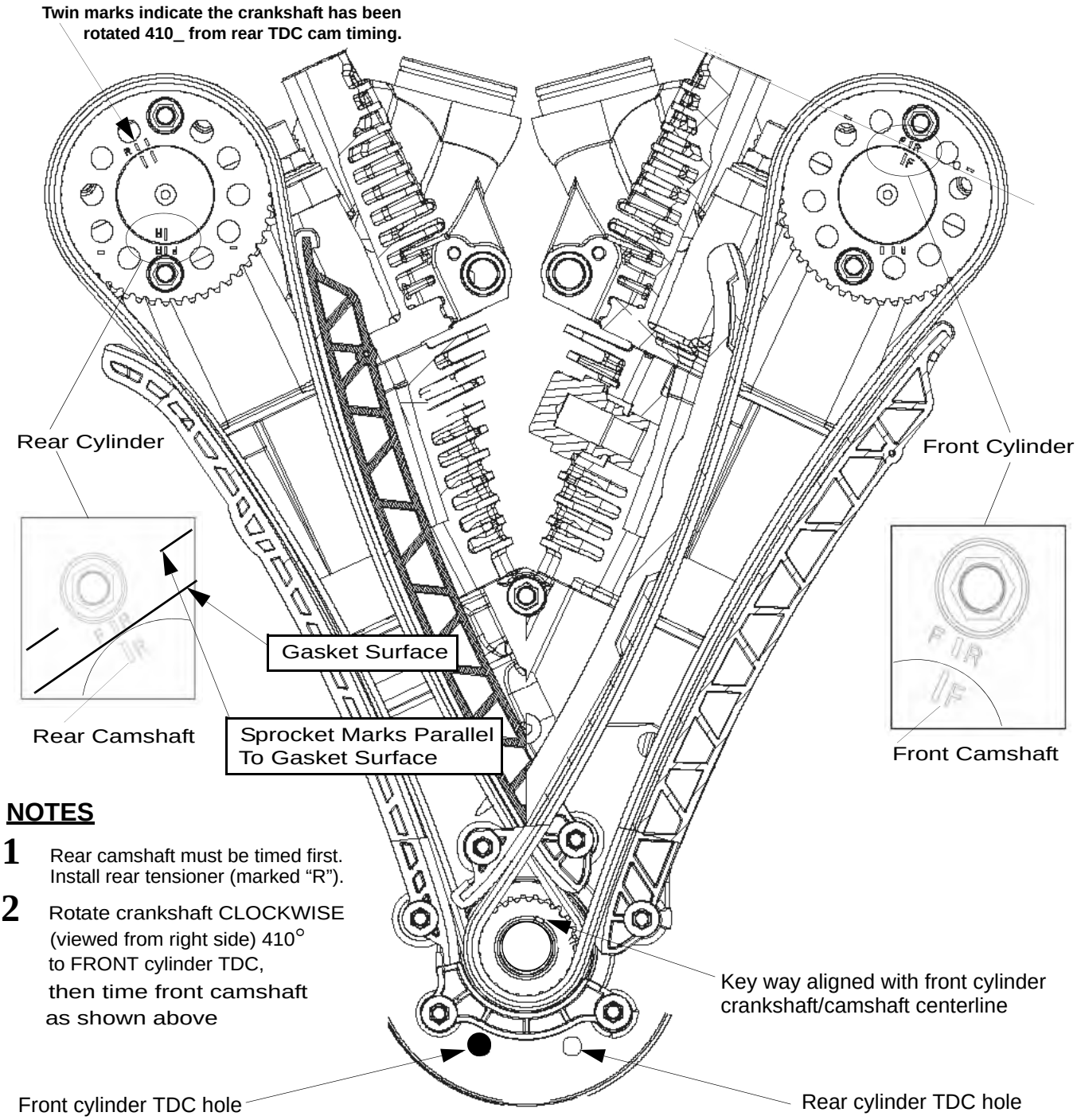

NOTES

1 Rear camshaft must be timed first. Install rear tensioner (marked "R").

2 Rotate crankshaft CLOCKWISE (viewed from right side) 410° to FRONT cylinder TDC, then time front camshaft as shown above

Ill. 1

© 2009 Polaris Sales Inc.

CYLINDER HEAD SERVICE

CAMSHAFT DRIVE COVER

1. Remove cam drive cover.
2. Remove CPS timing wheel.

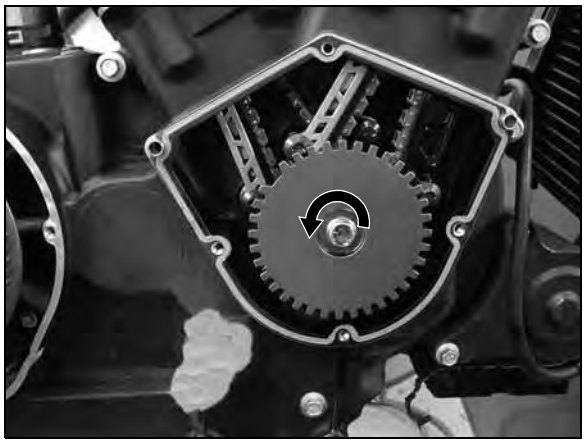

3. Place shop towel in cavity below cam drive sprocket to prevent objects from falling into crankcase.

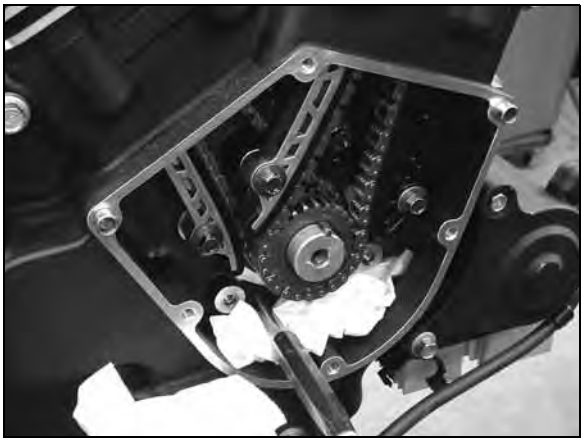

4. Rotate engine to front or rear TDC using Crankshaft Rotation Tool PV-48736.
5. Insert 8mm (5/16) pin at front or rear cylinder TDC to prevent engine rotation. See page 7.8

CAUTION

Do not rotate engine with cam chain tensioner(s) removed.

VALVE COVER REMOVAL

1. Engine removal is required. Refer to Chapter 6.
2. Remove all valve cover screws.
3. Tap cover with a soft faced hammer until loose.
4. Remove cover and gasket.

VALVE COVER INSTALLATION

1. Install gasket with sealant bead UP (toward cover) on clean, dry surfaces.
2. Install all screws and tighten evenly in a cross pattern.

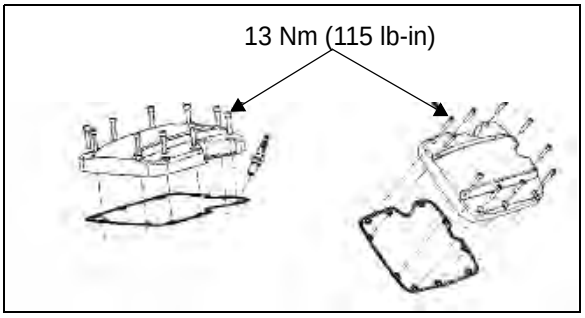

CAM CHAIN TENSIONER REMOVAL

CAUTION

Do not rotate engine with tensioner(s) removed.

1. Remove tensioner body (A), sealing washer (B) and damper sleeve (C) (damper on FRONT cylinder only).
2. Inspect tensioner parts.

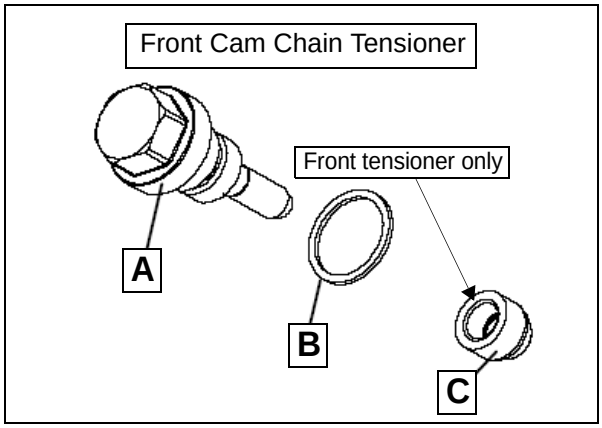

© 2009 Polaris Sales Inc.

CAM CHAIN TENSIONER INSPECTION

1. Visually inspect inner plunger (A) for damage, scoring, or burrs.
2. Lubricate inner plunger with engine oil. Move plunger in and out of outer plunger (B) to check for smooth movement without binding.
3. Inspect damper (C) on FRONT tensioner. It should slip over inner plunger with noticeable drag, not a loose fit.
4. Replace tensioner assembly or damper if worn or damaged.

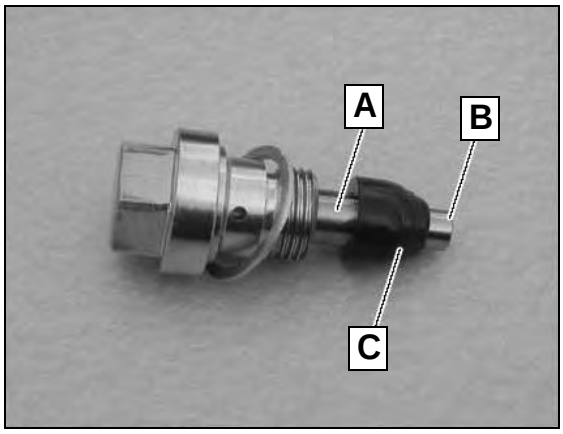

CAM CHAIN TENSIONER INSTALLATION

1. Lubricate all parts with engine oil.
2. Install damper (C) squarely into tensioner bore in cylinder, and push it past the first 4 or 5 threads.

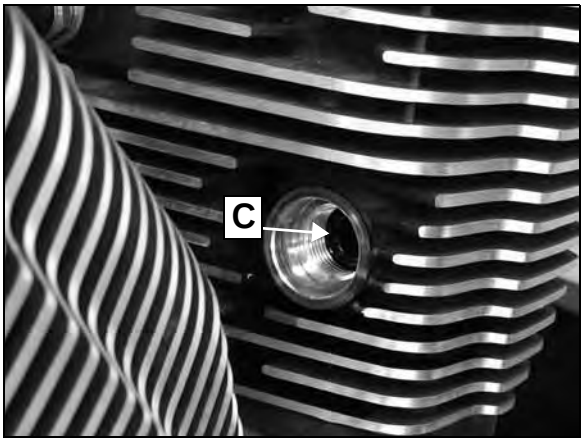

3. Install tensioner body with a new sealing washer.
4. Torque tensioner body to 75 Nm (55 lb-ft).

© 2009 Polaris Sales Inc.

CAMSHAFT CHAIN & SPROCKET REMOVAL

1. Remove engine from frame (Chapter 6).

2. Remove camshaft drive cover and CPS timing wheel (page 7.9).

3. Rotate crankshaft clockwise, past TDC on the compression stroke for front cylinder until bottom sprocket bolt (A) is accessible and remove it.

Crankshaft Rotation Socket: PV-48736

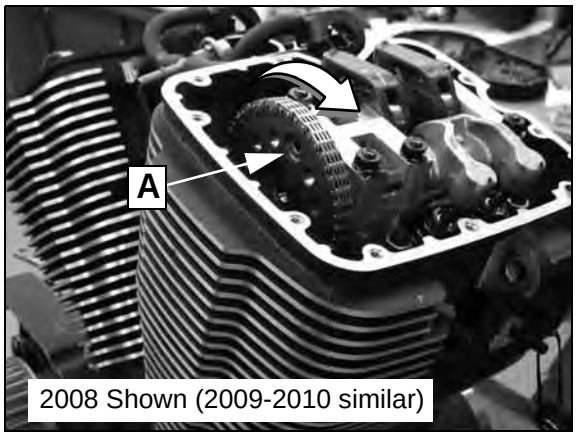

2008 Shown (2009-2010 similar)

4. Rotate crankshaft clockwise back to front cylinder TDC (camshaft marks aligned with cylinder head surface) and remove top sprocket bolt (B).

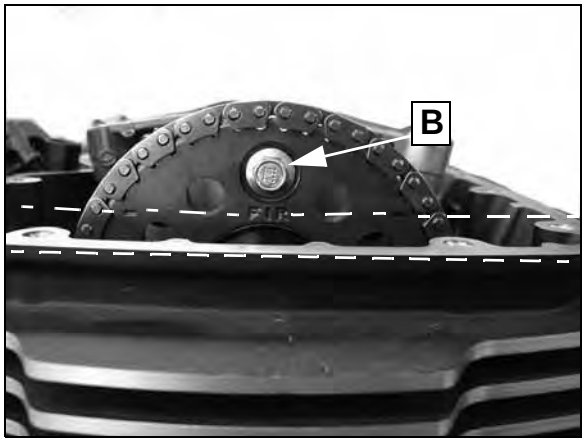

5. Remove front cam chain tensioner (page 7.9).

6. Remove lower cam chain guide (below drive sprocket).

7. Remove tensioner blade bolt (C) and guide bolt (D).

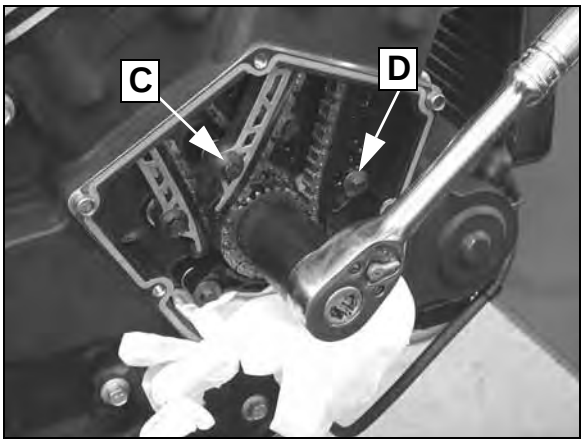

8. Remove cam chain and sprocket from camshaft and lower it between tensioner blade and guide, then remove chain from drive sprocket on crankshaft.

9. Lift chain, sprocket, tensioner blade, and guide out of engine.

10. Repeat steps for rear cylinder.

© 2009 Polaris Sales Inc.

ROCKER ARM REMOVAL: 2008

NOTE: Keep mated rocker arm shafts and rocker arms together. Do not interchange mated parts. Rocker arm carrier is marked "F" for front cylinder. Mark parts as required to keep them in order.

1. Remove or loosen rocker arm carrier nuts (A) 1/2 turn at a time using a cross pattern until loose.

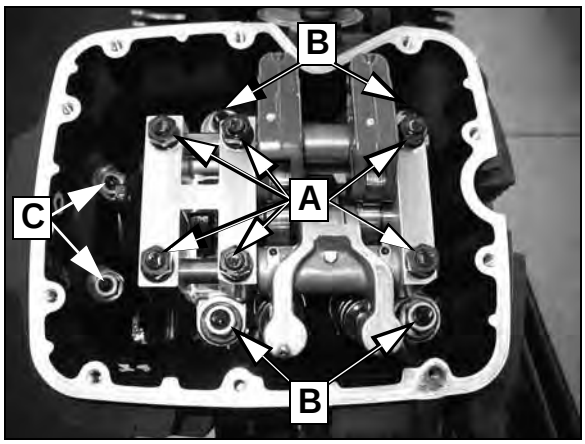

2. Remove carrier nuts and washers.

3. Remove upper cam carrier and camshaft.

4. If cylinder head will be removed, camshaft upper and lower carrier can be removed as an assembly together with camshaft. To do this, loosen nuts (A) evenly in a cross pattern about 3 full turns, then loosen all (6) cylinder head nuts evenly and remove nuts and washers. Lift camshaft and carrier out as an assembly.

5. Note markings on end of front and rear camshafts. Front and rear cylinder heads use different camshafts. Camshafts are marked at drive end.

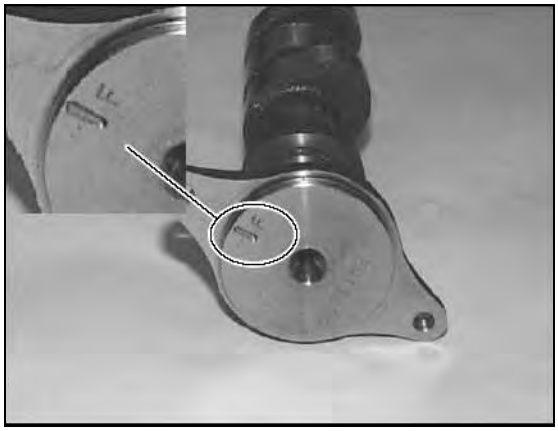

ROCKER ARM & SHAFT INSPECTION: 2008

1. Separate top and bottom half of rocker carrier. Tap shaft out of top carrier until hole in shaft is exposed on the other end.

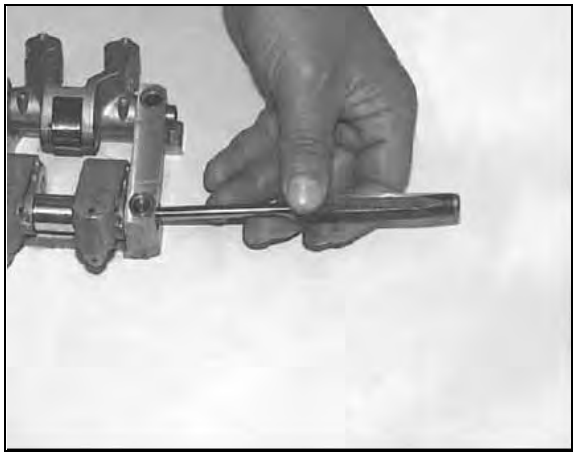

2. Remove shafts with a twisting motion.

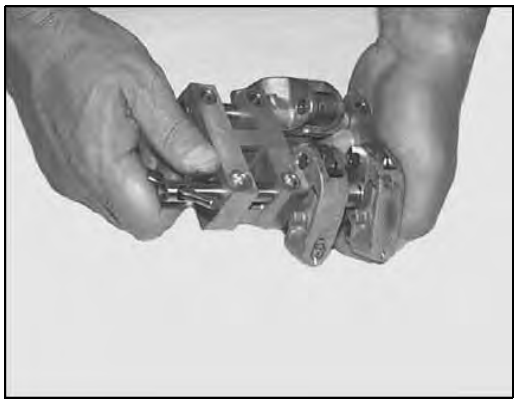

3. Visually inspect rocker arms and rocker arm shafts for excessive wear, scoring or damage.

4. Inspect all oil passages and clean thoroughly. Use only clean solvent. Do not allow dirt to contaminate the hydraulic adjuster on rocker arm.

5. Rotate rocker arm on shaft. The rocker arm should fit the shaft tightly without excessive play, and rotate smoothly on the shaft without binding.

© 2009 Polaris Sales Inc.

6. Measure O.D. of each rocker arm shaft (A) and compare to specification.

7. Measure I.D. of each rocker arm (B).

8. Subtract rocker arm shaft O.D. from its matching rocker arm I.D. to determine rocker arm shaft-to-rocker arm clearance. Compare to specification on page 7.3.

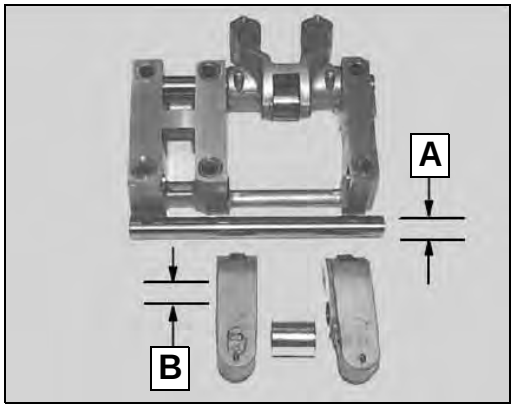

9. Replace parts worn beyond service limits.

CAMSHAFT INSPECTION: 2008

1. Visually inspect camshaft journal surfaces (C) for scoring or signs of insufficient lubrication. Replace camshaft if heavy scoring or damage is noted.

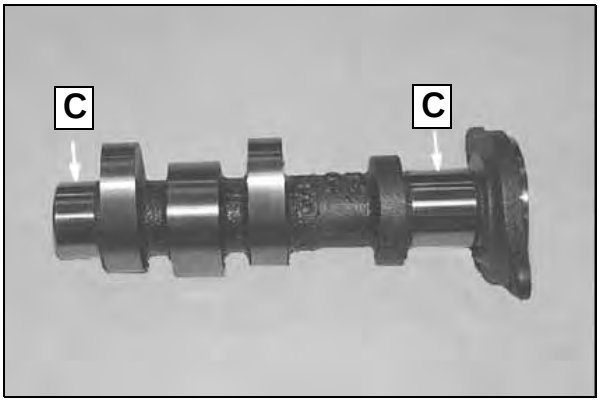

2. Measure O.D. of each camshaft journal.

3. Inspect height of each cam lobe.

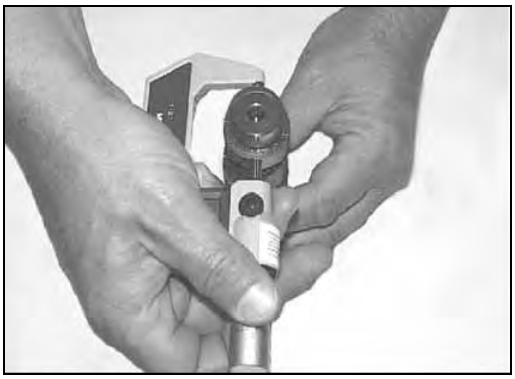

© 2009 Polaris Sales Inc.

CAMSHAFT CARRIER REMOVAL: 2009-2010

NOTE: Base and head gasket seal is released when removing camshaft carrier. Replacement of both head and base gasket is recommended to prevent oil leaks. Keep mated parts together.

1. Remove M8 nuts (A) with washers. Loosen camshaft carrier/cylinder head nuts (B) 1/2 turn at a time using a cross pattern until loose.

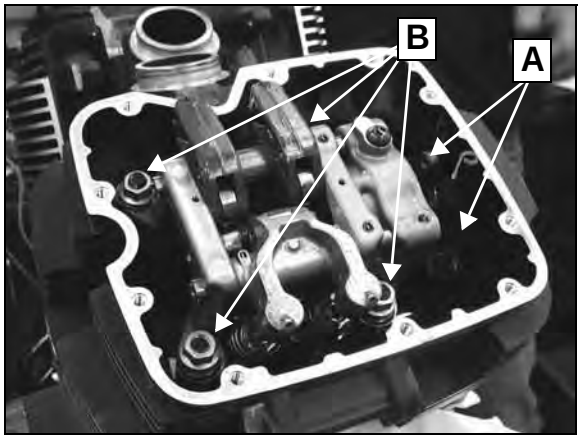

2. Remove carrier nuts and washers, then remove carrier with camshaft and rocker arms as an assembly.

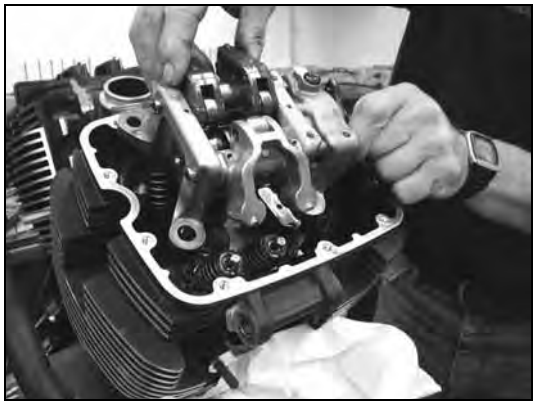

3. Note markings “F” or “R” on drive end of camshafts. Front and Rear cylinder heads use different camshafts.

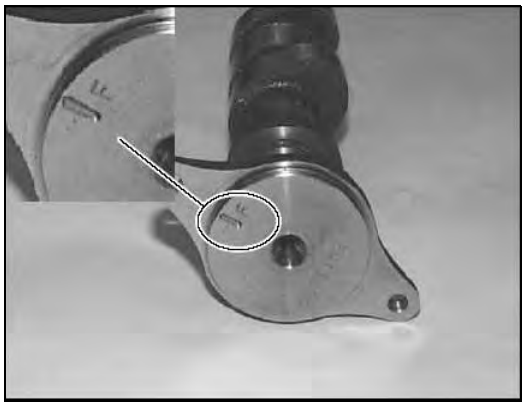

ROCKER ARM & SHAFT INSPECTION: 2009-2010

1. Remove button head screw (C) and pin (D). Slide camshaft out of carrier.
2. Remove dog point screws (E) and tap rocker shafts out of carrier.
3. Visually inspect rocker arms and rocker arm shafts for wear, scoring, or damage.
4. Inspect all oil passages and clean thoroughly. Use only clean solvent. Do not allow debris to contaminate hydraulic lifters on rocker arms.
5. Rocker arm should fit tightly on shaft without excessive play, and rotate smoothly on shaft without binding.
6. Check roller for radial movement. Roller should have no noticeable radial movement (F).
7. Apply light pressure to roller with a flat piece of bar stock and draw the stock over the roller while observing movement. Roller should not stop, drag, or bind.

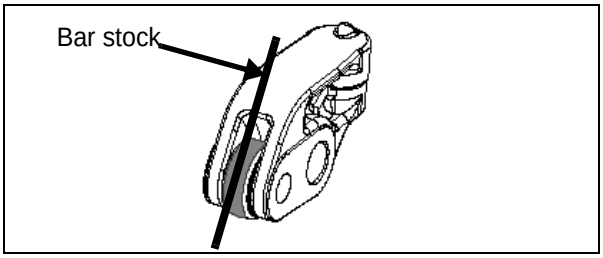

8. Measure O.D. of each rocker arm shaft (G) and compare to specification.
9. Measure I.D. of each rocker arm (H).
10. Subtract rocker arm shaft O.D. from its matching rocker arm I.D. to determine clearance. Compare to specification on page 7.3.

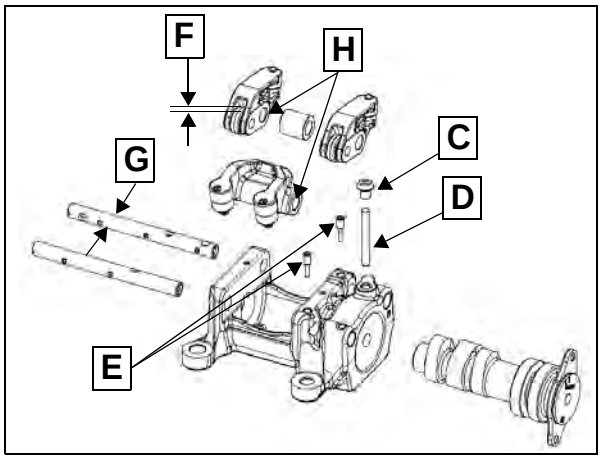

11. Replace parts worn beyond service limits.

© 2009 Polaris Sales Inc.

CAMSHAFT INSPECTION (ALL - TYPICAL)

1. Visually inspect camshaft journal surfaces (A) for scoring or signs of insufficient lubrication. Replace camshaft if heavy scoring or damage is noted.

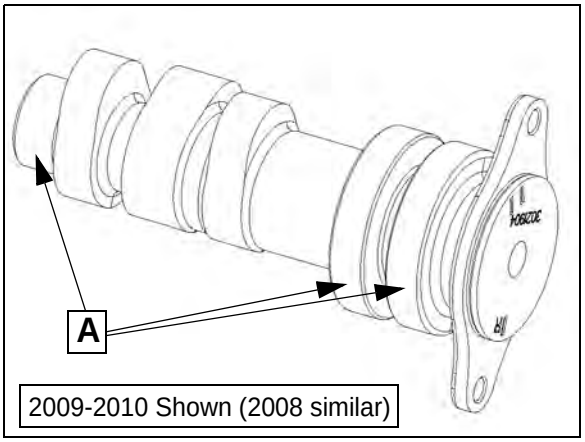

2. Measure O.D. of each camshaft journal.

3. Inspect height of each cam lobe.

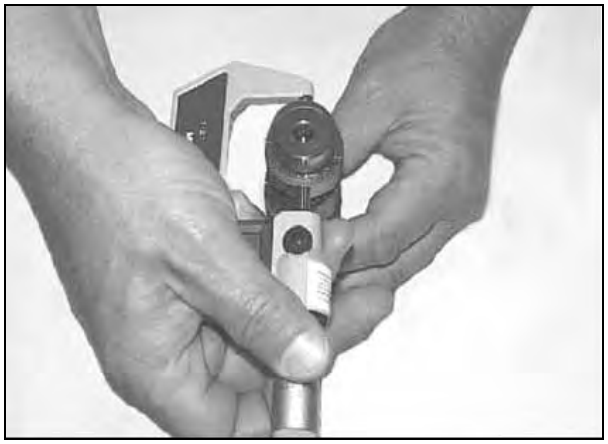

© 2009 Polaris Sales Inc.

CYLINDER HEAD REMOVAL: 2008

1. Remove engine (Chapter 6).
2. Remove camshafts (page 7.11).
3. Loosen cylinder nuts (A) completely.
4. Loosen nuts (B) 1/4 turn at a time using a cross pattern until all four are loose.

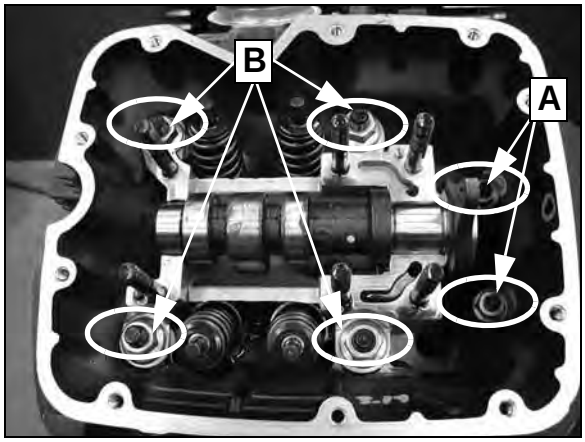

5. Remove all nuts and washers, along with lower camshaft carrier.
6. Remove cylinder head and gasket.

CYLINDER HEAD REMOVAL: 2009-2010

1. Remove engine (Chapter 6), valve covers (page 7.9), and camshaft sprockets (page 7.11).
2. Remove camshafts (page 7.14).
3. Remove cylinder head nuts and washers (A).
4. Remove cylinder head (B) head gasket (C) and alignment pins (D).

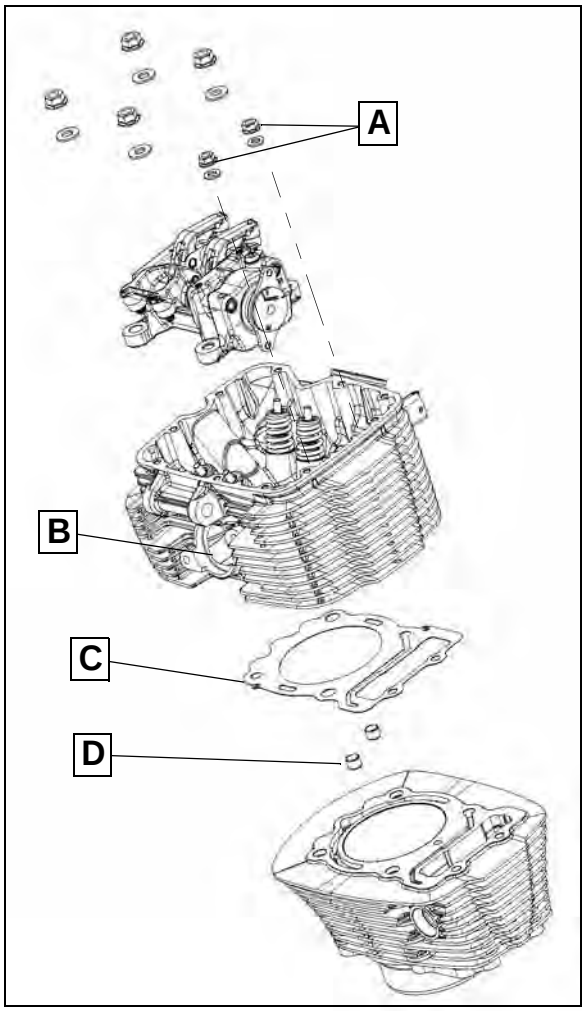

© 2009 Polaris Sales Inc.

CYLINDER HEAD DISASSEMBLY

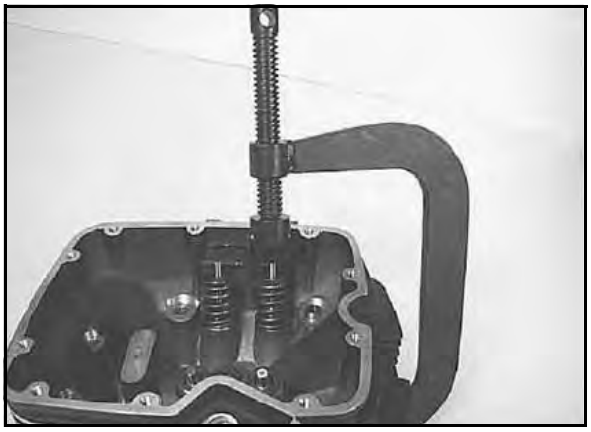

CAUTION

Wear eye protection while removing valve springs.

NOTE: Keep mated parts together for assembly. It is important to put cylinder head parts back in the same location.

Valve Spring Compressor: PV-1253 (or PV-4019 with adapter PV-43513-A)

1. Remove the valve keepers (A) using a valve spring compressor tool. Use a pencil magnet to remove valve keepers.

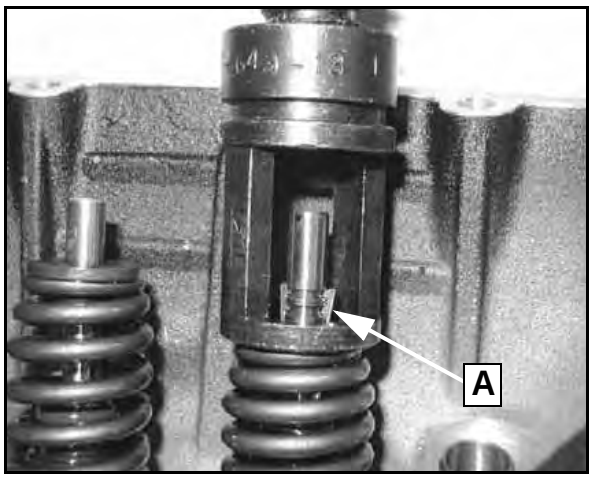

2. Remove upper valve spring retainers (B), springs (C), and valves (E).

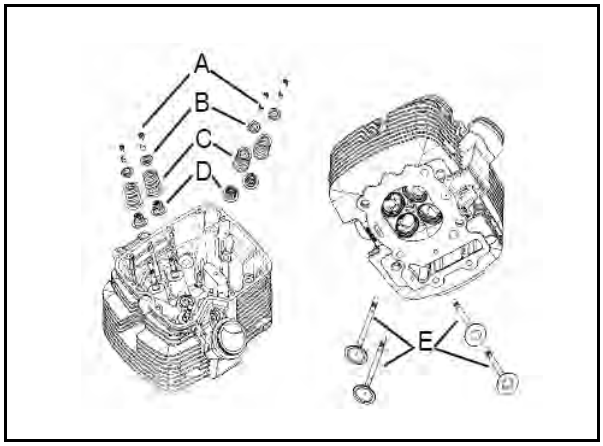

3. Remove and discard valve guide seals (D).
4. Clean carbon deposits from combustion chamber.

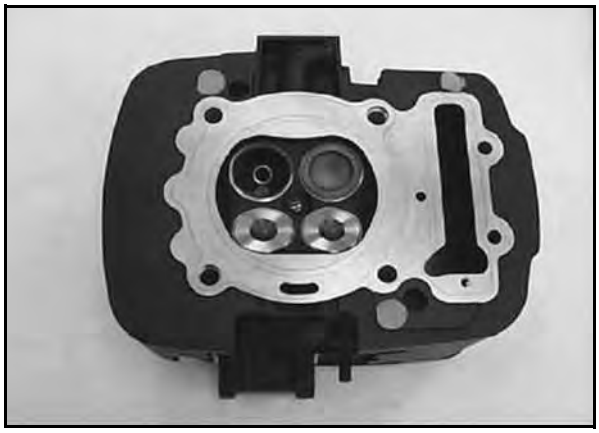

5. Clean gasket surfaces.

© 2009 Polaris Sales Inc.

CYLINDER HEAD INSPECTION

1. Visually inspect cylinder head for cracks or damage. Pay close attention to the areas around spark plug and valve seats.
2. Be sure oil passage (A) in cylinder head is unobstructed.

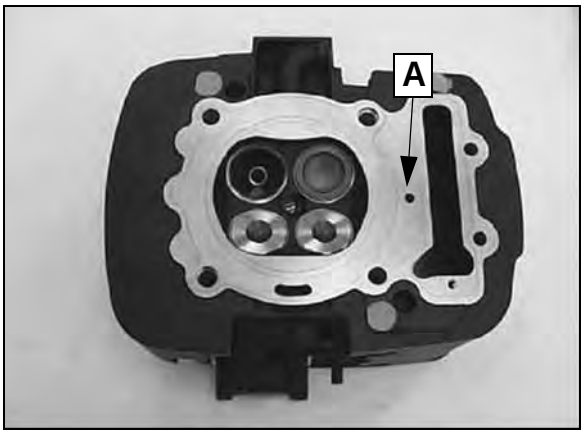

3. Inspect cylinder head for distortion with a straight edge and feeler gauge. Check in different directions and locations on the cylinder head as shown. Compare to specification on page 7.3.

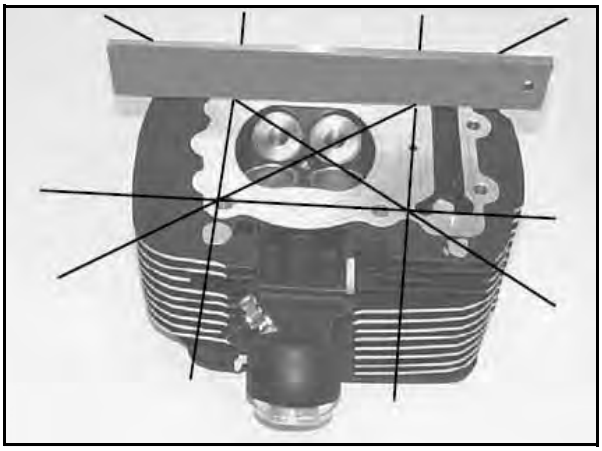

VALVE SPRING FREE LENGTH INSPECTION

1. Measure free length of valve springs. Replace springs that do not meet specification on page 7.3.

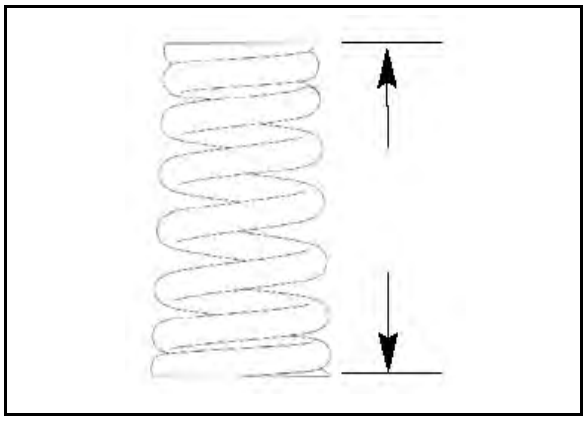

NOTE: Intake and exhaust springs are identical.

VALVE INSPECTION

Specification are on page 7.3.

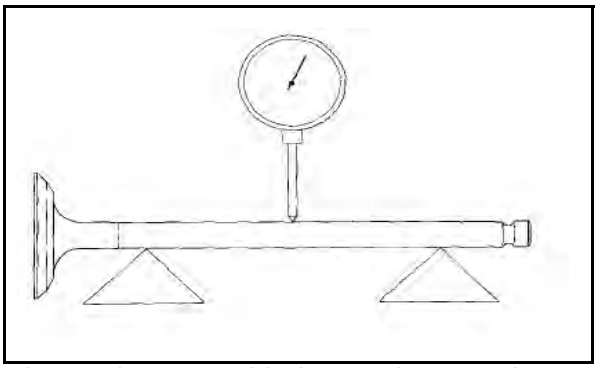

1. Place valves on V-blocks as shown and measure valve stem runout.
2. Inspect the valve face for damage from burning, pitting or uneven contact.
3. Place valves in V-block as shown in and inspect valve head radial runout.

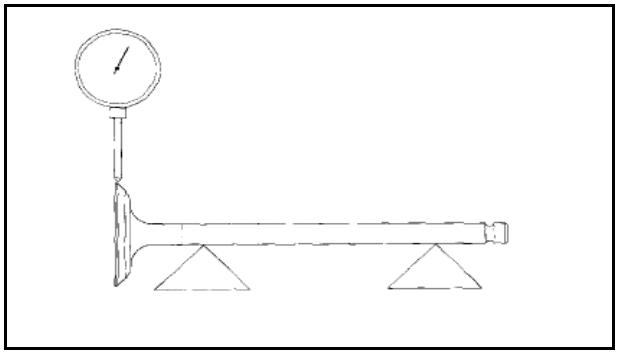

4. Insert valves into their original locations in cylinder head.

© 2009 Polaris Sales Inc.

5. Inspect that each valve moves up and down smoothly without binding in guide.
6. Measure valve stem deflection for each valve to determine if valve or valve guide requires replacement.
   A. Raise valve 10mm (0.400") off of seat.
   B. Position dial indicator as shown. Measure deflection in two directions perpendicular to each other (X & Y axis).

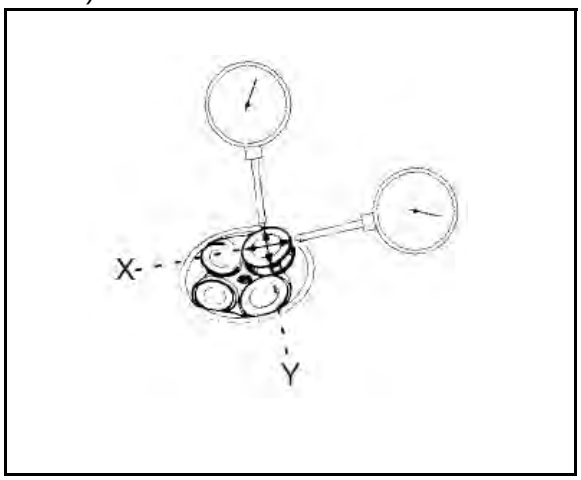

7. If valve deflection exceeds service limit measure valve stem.
8. Replace valve and repeat step 6 if valve stem O.D. measures outside standard range. If valve stem deflection exceeds service limits with a new valve installed, valve guide must be replaced.

Measure valve stem in several places.

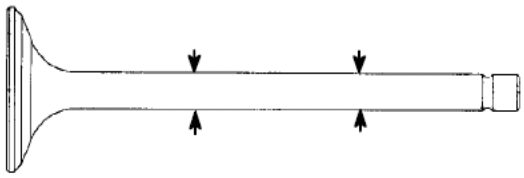

9. Installation of new valve guides and/or new valves requires valve seat reconditioning. This work should be performed by a technician experienced in cylinder head reconditioning and properly equipped.

© 2009 Polaris Sales Inc.

VALVE INSPECTION

VALVE INSPECTION			
CONDITION	**ILLUSTRATION**	**POSSIBLE CAUSE**	**CORRECTIVE ACTION**
Uneven seat width		Bent valve stem, worn valve guide	Replace valve and reface seat
Damaged valve face	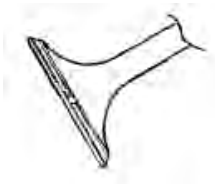	Burnt, pitted, foreign material damage	Replace valve and reface seat
Contact area too high		Wear, settling of valve seat	Lower with 30° stone
Contact area too low		Wear, settling of valve seat	Raise with 60° stone
Contact area too wide		Wear, settling of valve seat	Narrow with both 30° stone and 60° stone
Contact area too narrow	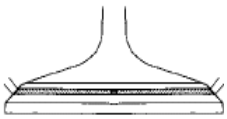		Use 45° stone
Contact area free of pitting and damage, centered in seat, proper width.	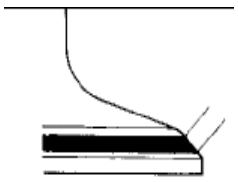	Correct	None

© 2009 Polaris Sales Inc.

VALVE GUIDE REMOVAL / INSTALLATION

CAUTION

Replacement of valve guides requires an oven, special equipment and experience to do the job correctly. If you are unsure of your ability to do the repair professionally it is best to sublet the labor to a competent machinist. Valve seat reconditioning is required when valve guides are replaced.

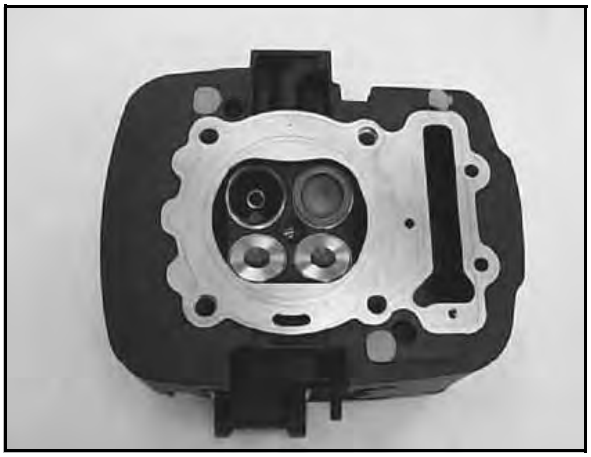

1. Support cylinder head and place valve guide remover into valve guide from the combustion chamber side.
2. Drive or press old valve guides out of cylinder head.

CAUTION

The cylinder head can be easily damaged if the procedure is done carelessly.

3. Apply 90 weight oil to outside of new valve guides.
4. Drive or press new guides from camshaft side of head. Drive or press guides in until circlip (A) seats against head surface (B).

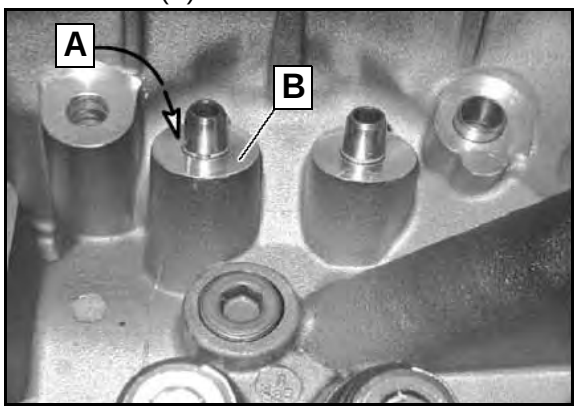

5. Measure valve guide height from spring seat:

   GUIDE INSTALLED HEIGHT: 12.20-12.80 mm
6. Ream new valve guides to size to obtain specified stem-to-guide clearance. Ream from combustion chamber side of head.

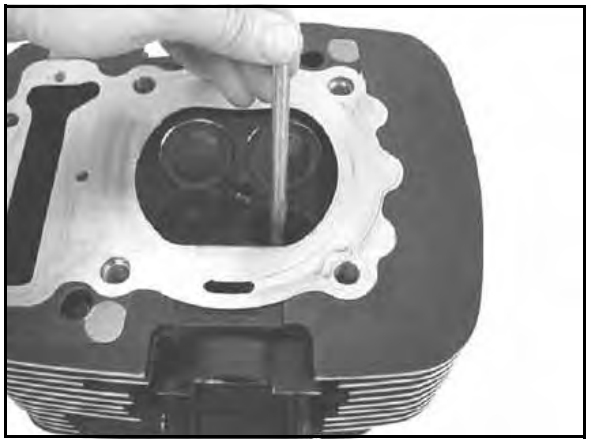

CAUTION

Do not tilt the reamer while reaming the guide. Always rotate the reamer in a clockwise direction.

7. Clean cylinder head thoroughly with clean solvent.
8. Inspect and recondition valve seats.

© 2009 Polaris Sales Inc.

VALVE SEAT INSPECTION

1. Remove carbon deposits from valves and seats.
2. Inspect valve face for burning, pitting or uneven contact. (Fig. 1)

Valve Seat Centered. No Pitting or Damage. Refer to width specifications.

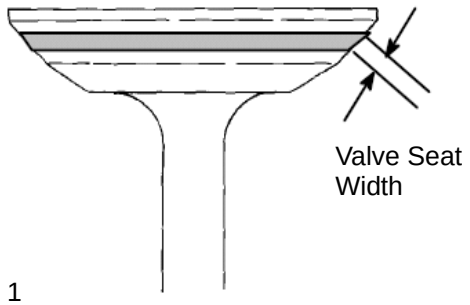

Fig. 1

NOTE: Valves cannot be ground. If valve face is burned or badly worn, replace the valve.

3. Apply a light coating of machinist's layout fluid or paste to valve face.
4. Install valve into valve guide.
5. Tap valve several times to make a clear impression on the valve face. Do not rotate valve.
6. Remove valve and measure contact area (valve seat width).
7. If valve seat is incorrect, recondition as needed.

VALVE SEAT RECONDITIONING

NOTE: Valve seat reconditioning should be performed by a technician proficient in cylinder head reconditioning techniques using grinding stones. The use of carbide cutters is not recommended. Follow recommendations of the manufacturer of the valve seat reconditioning equipment being used. Do not grind seats more than necessary to provide proper seat width and contact point on valve face.

© 2009 Polaris Sales Inc.

CYLINDER HEAD ASSEMBLY

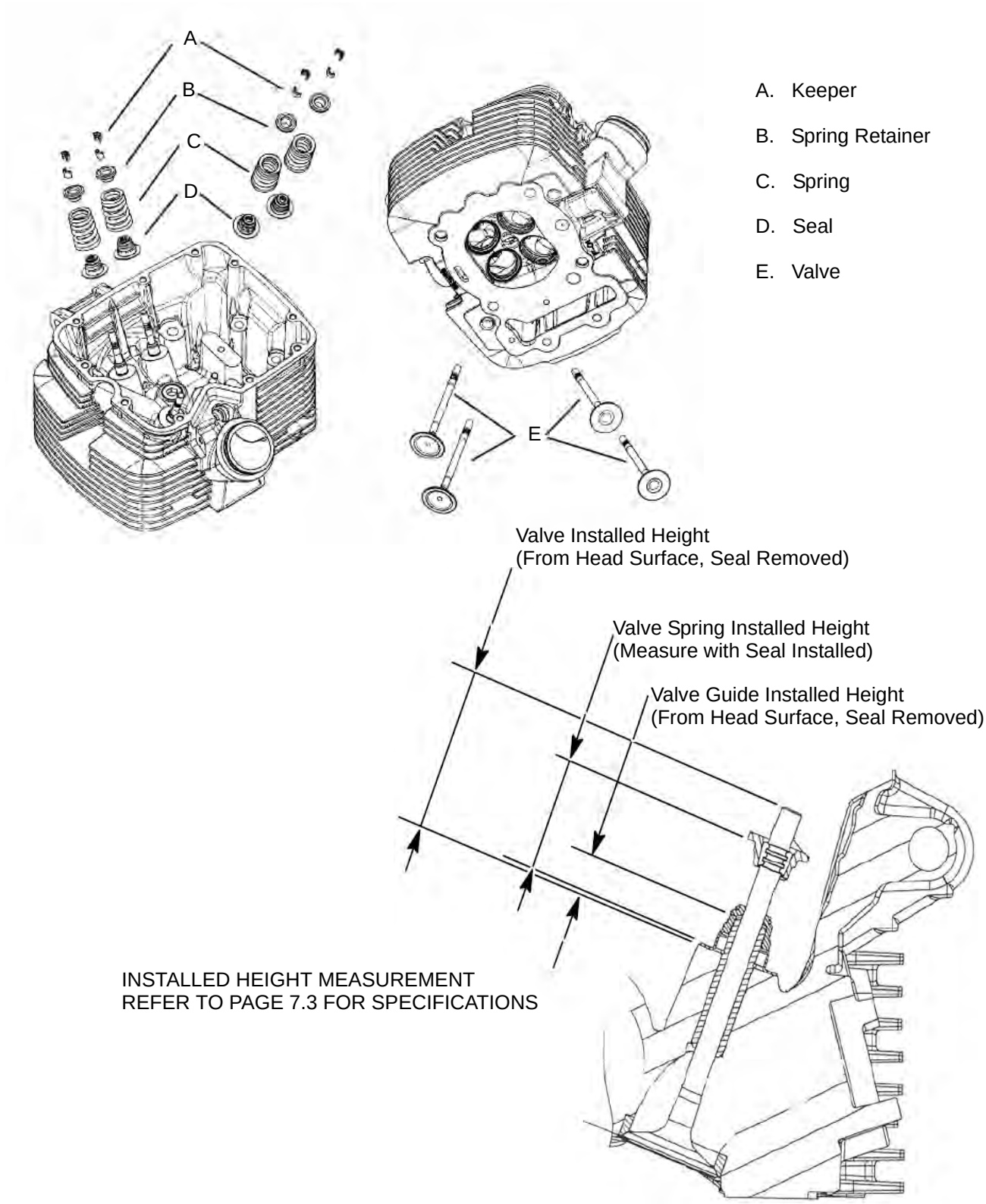

© 2009 Polaris Sales Inc.

CYLINDER HEAD ASSEMBLY

CAUTION

Wear eye protection during assembly.

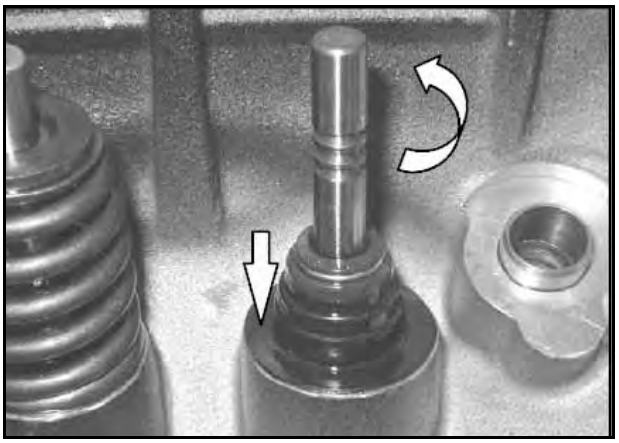

1. Lubricate valve stems with assembly lube.

   Moly assembly paste PN: 2871460

2. Install valve in head before installing seal. Hold valve against seat wipe off the portion that extends above the guide.
3. Apply Victory engine oil to valve guide seal and install seal on valve, rotating the seal as you install it.
4. Press seal firmly in place on top of guide. Be careful not to dislodge spring from seal.
5. Install valve spring and upper retainer.

CAUTION

Support cylinder head so valves will not be damaged.

Do not compress valve springs more than necessary to install keepers.

6. Compress valve springs using a valve spring compressor and adapter.

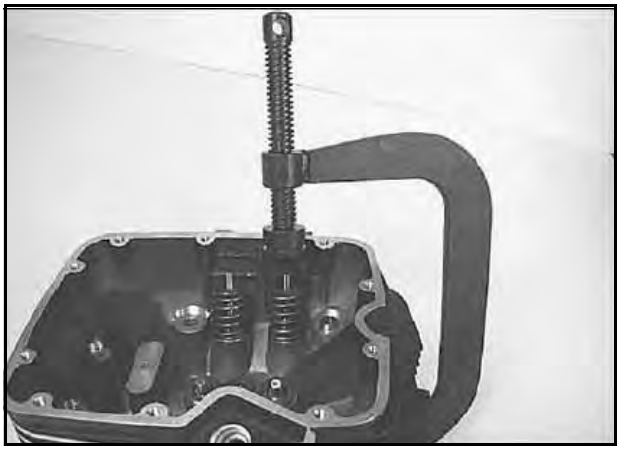

7. Apply a small amount of grease to both sides of a valve keeper.

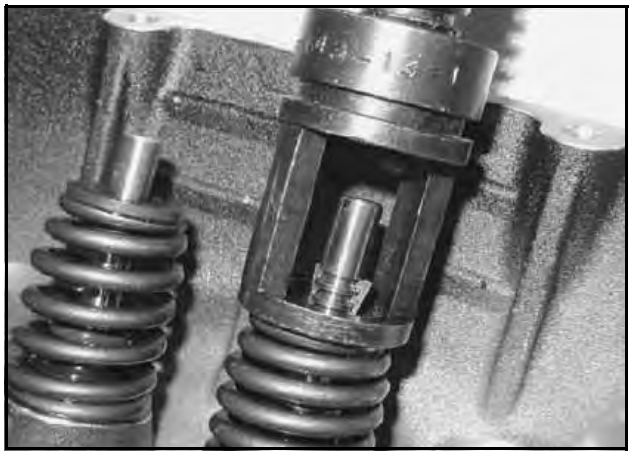

8. Insert both valve keepers in place on valve.
9. Remove spring compressor.
10. Repeat previous steps for remaining valves.
11. Be sure all keepers are fully seated in groove.

© 2009 Polaris Sales Inc.

CYLINDER HEAD INSTALLATION: 2008

NOTE: Base gasket seal is broken upon cylinder head removal and must be replaced at this time. Refer to Chapter 8 for cylinder base gasket replacement.

1. Thoroughly clean cylinder and cylinder head gasket surfaces. Both surfaces and gasket must be free of oil or grease.

IMPORTANT: Gaskets and gasket sealing surfaces (A) must be free of oil and grease during assembly.

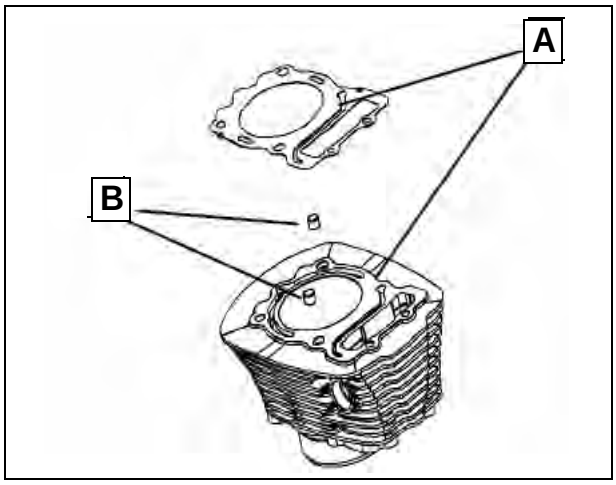

2. Install dowel pins (B).
3. Install a new head gasket.

4. Install cylinder head onto cylinder.

⚠ CAUTION

The camshaft carrier can be installed as an assembly, with camshaft. However, all nuts (C) on upper half of carrier must be removed or loosened to allow upper half to move upward when cylinder head / lower carrier nuts are tightened. Lower holder may crack if installed with upper carrier nuts tight. Installation procedure below describes individual assembly of components.

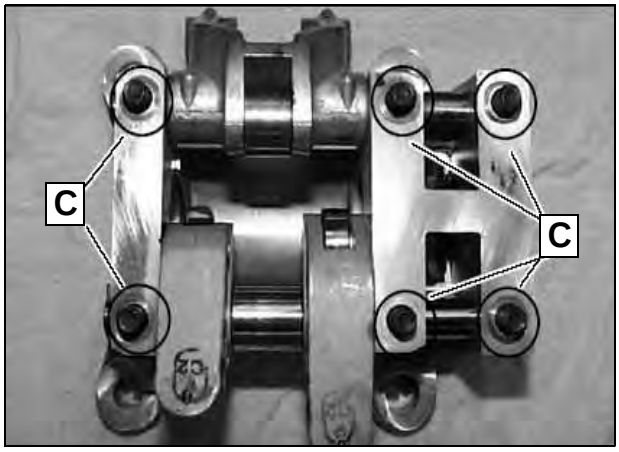

5. Camshaft carriers are matched. Carriers are marked FRONT or REAR for installation in their respective cylinders (D).

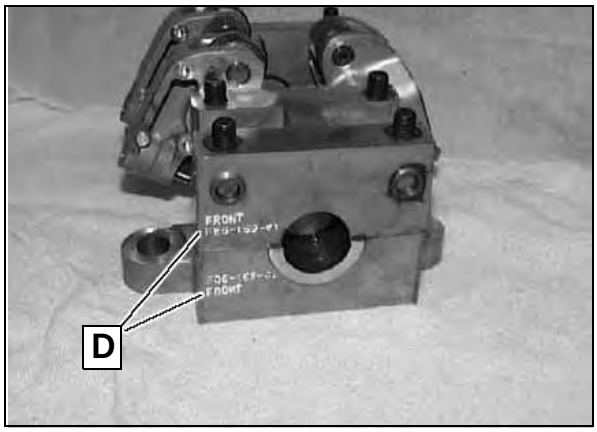

© 2009 Polaris Sales Inc.

6. Install (E) on cylinder head.

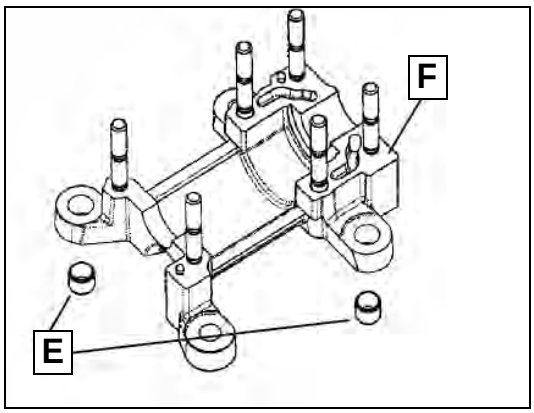

7. Install (F) over dowel pins and tap lightly to seat in place.
8. Apply engine oil to nut threads and nut bases.
9. Install washers and nuts on cylinder studs. Tighten finger tight.

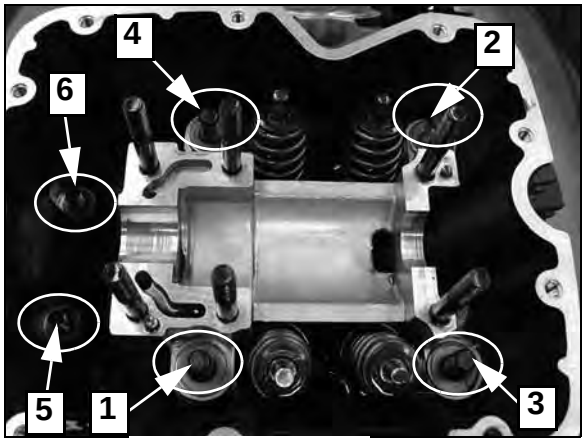

FRONT CYLINDER HEAD
(View from front of engine)

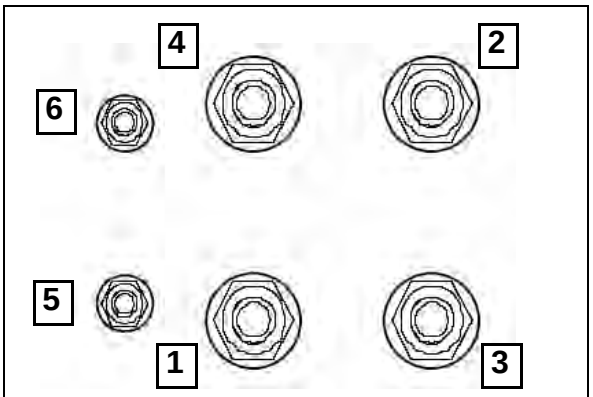

REAR CYLINDER HEAD
(View from front of engine)

10. Follow torque procedure below to ensure accurate final torque:

CYLINDER HEAD TORQUE PROCEDURE: 2008

Step 1 Apply engine oil to nut thread and nut bases.

Step 2 Follow torque pattern shown.

Step 3 Tighten 10 mm nuts (1-4) to 30 Nm (22 lb. ft.)

Step 3 Back off completely

Step 4 Tighten 10 mm nuts (1-4) to 54 Nm (40 lb. ft.)

Step 5 Repeat the 54 Nm (40 lb-ft) torque on 1-4.

Step 6 Torque 8mm nuts (5-6) to 24.5 Nm (18 lb-ft).

CAMSHAFT / ROCKER INSTALLATION: 2008

1. Camshafts are marked F (front) or R (rear) on drive end for installation in their respective cylinders. Align mark on cam and sprocket to ensure proper orientation. Mount cam chain sprocket onto camshaft temporarily with one bolt finger tight.

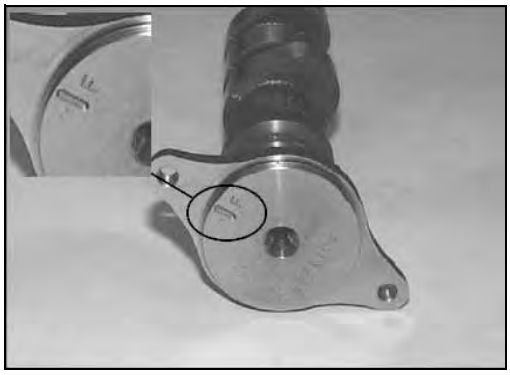

2. Apply moly paste to camshaft journals (A) cam lobes (B) and ends of all valve stems (C). Install camshaft into lower carrier.

Moly assembly paste PN: 2871460

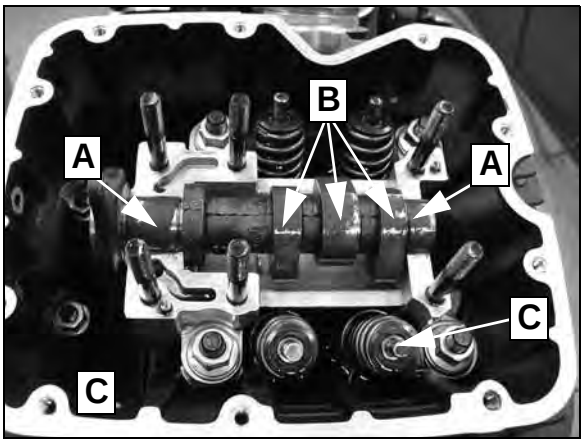

© 2009 Polaris Sales Inc.

3. Turn cam until lobes are pointing down.
4. Inspect each rocker arm and position flat side of hydraulic adjuster down as shown at right (D).

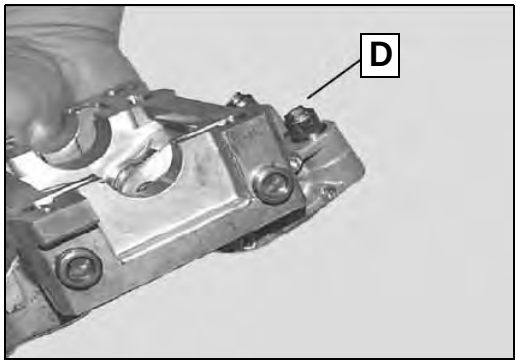

5. Apply engine oil to rocker arms.
6. Install rocker arm assembly over lower carrier studs.

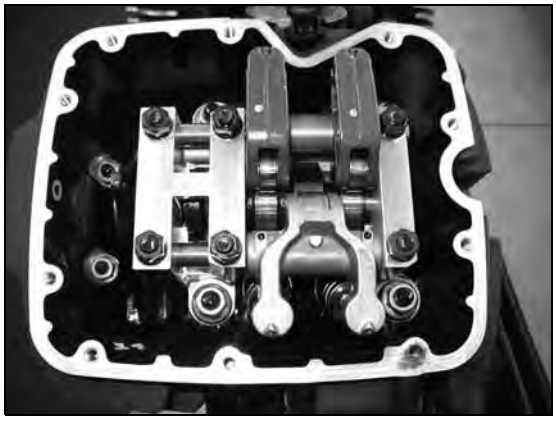

7. Apply engine oil and Install washers and nuts.
8. Tighten nuts evenly in a cross pattern 1/2 turn at a time until rocker assembly is seated.
9. Torque rocker arm carrier to specification in 3 steps following the torque pattern shown below.

CAM CARRIER TORQUE SEQUENCE
27 NM (20 LB-FT.)

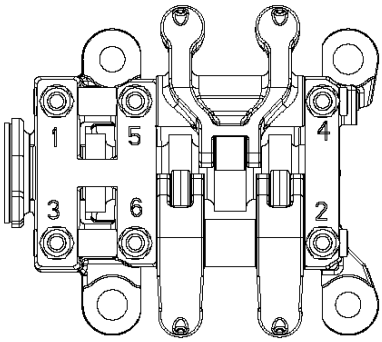

10. Rotate cams back and forth slightly to verify free rotation. Allow sufficient time (up to 5 minutes) for lifters to bleed down before performing this inspection.

CYLINDER HEAD INSTALLATION: 2009-2010

NOTE: Base gasket seal is broken upon cylinder head removal and must be replaced at this time. Refer to Chapter 8 for cylinder base gasket replacement.

1. Thoroughly clean cylinder and cylinder head gasket surfaces. Both surfaces and gasket must be free of oil or grease.

IMPORTANT: Gaskets and gasket sealing surfaces (A) must be free of oil and grease during assembly.

2. Install dowel pins (B).

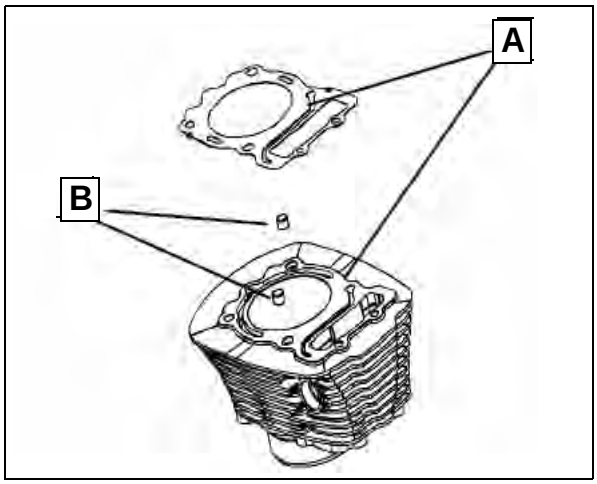

3. Install a new head gasket.

4. Clean gasket surface on cylinder head and set cylinder head in place on cylinder.

© 2009 Polaris Sales Inc.

5. Camshaft carriers are marked “F” (FRONT) or “R” (REAR) for installation in their respective cylinder heads (C).

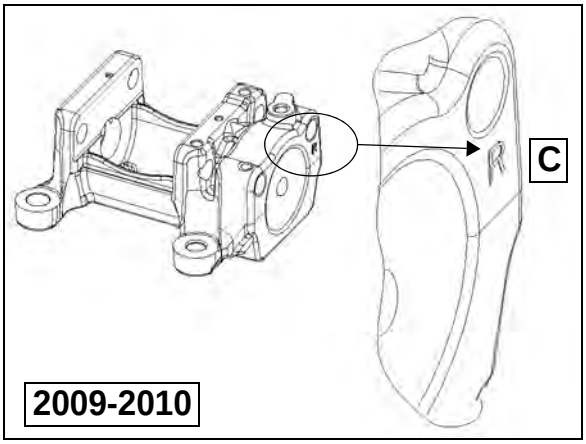

6. Apply Moly Assembly Paste (P/N 2871460) to lobes and main journals of camshaft.

7. Install camshaft marked “R” into rear cam carrier and camshaft marked “F” into front cam carrier.

8. Be sure alignment pins (D) are in place and fully seated in cylinder head.

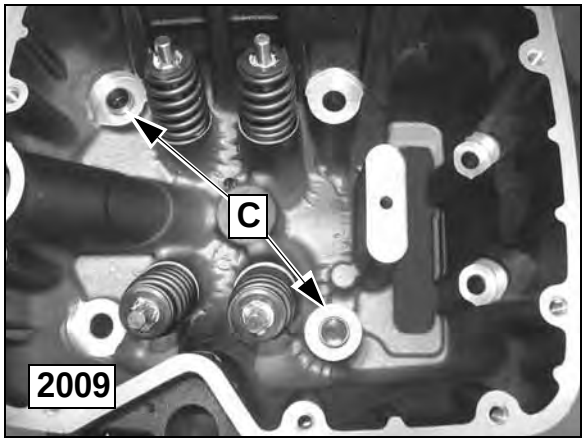

9. Turn camshaft until lobes are pointing down (away from cam follower rollers).

10. Inspect each rocker arm and position flat side of hydraulic lifter DOWN.

11. Set camshaft carrier on cylinder head.

12. Apply engine oil to 10mm studs, nut threads, nut bases and washers.

13. Install washers and nuts on cylinder studs. Tighten finger tight.

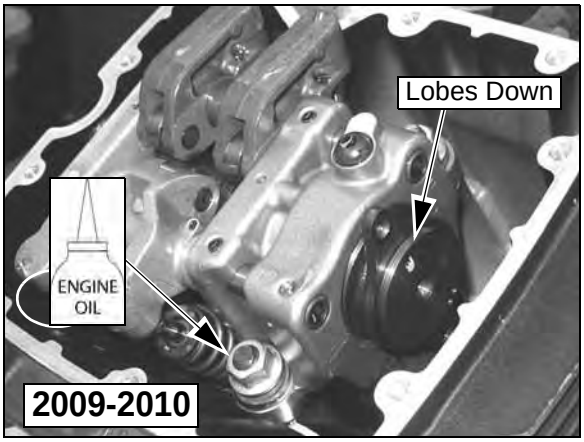

14. *Slowly and evenly* tighten cylinder head nuts following torque sequence in Fig. 2. This allows hydraulic lifters to bleed off pressure. Tighten only enough to seat cam carrier on head.

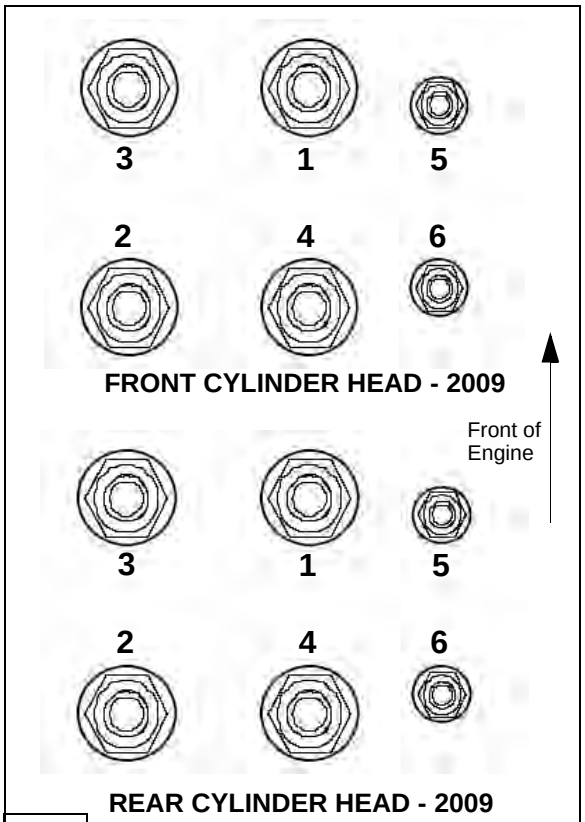

Fig. 2

© 2009 Polaris Sales Inc.

15. Fully torque cylinder head following the procedure below to ensure accurate final torque:

CYLINDER HEAD TORQUE PROCEDURE 2009-2010

(Camshaft carriers installed and seated in head)

Step 1 Lubricate 8mm studs, washers, and nuts with engine oil and install hand tight.

Step 2 Follow torque pattern shown in Fig. 2.

Step 3 Tighten 10 mm nuts (1-4) to 30 Nm (22 lb. ft.)

Step 3 Back off completely

Step 4 Tighten 10 mm nuts (1-4) to 54 Nm (40 lb. ft.)

Step 5 Repeat the 54 Nm (40 lb-ft) torque on 1-4.

Step 6 Torque 8mm nuts (5-6) to 24.5 Nm (18 lb-ft).

Step 7 Verify that camshaft rotates freely in carrier after hydraulic lifters have had time to bleed down.

Step 8 Repeat Steps 1-7 for other cylinder head.

© 2009 Polaris Sales Inc.

CAMSHAFT TIMING - REAR CYLINDER

NOTE: Rear cam chain must be installed first.

1. Rotate crankshaft clockwise to TDC (rear cylinder) using crankshaft rotation tool PV-48736.

Crank Rotation Socket PV-48736

2. Hold crankshaft at rear TDC by inserting an 8 mm (or 5/16″) locating pin through crankcase hole (A) into crankshaft.

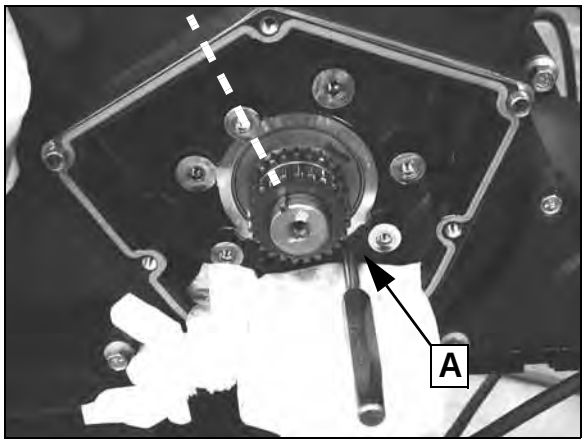

CAMSHAFT CHAIN GUIDE INSTALLATION

1. Place cam chain around rear camshaft sprocket and lower it into chain cavity along with the cam chain guide (B).
2. Seat upper pins of guide in the cylinder head recess, and install cam chain over innermost sprocket on crankshaft.
3. Install rear tensioner blade (C).
4. Torque guide and tensioner blade bolts to specification.

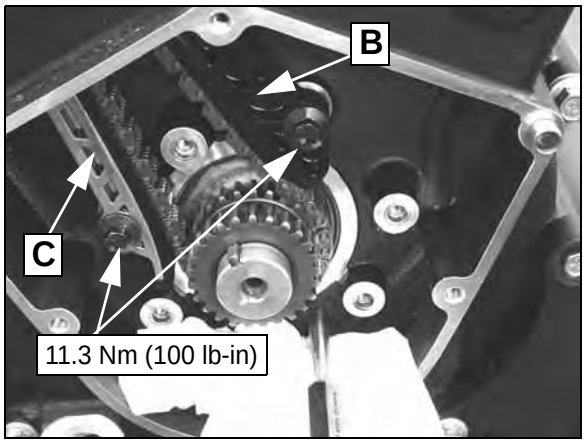

5. Be sure rear camshaft lobes are pointing down. The single mark on cam (D) must be facing UP as shown below.
6. Inspect marks before installing sprocket on camshaft. Mark on sprocket (E) must align with camshaft “R” mark (D). Outer marks (F) must be parallel with valve cover gasket surface.

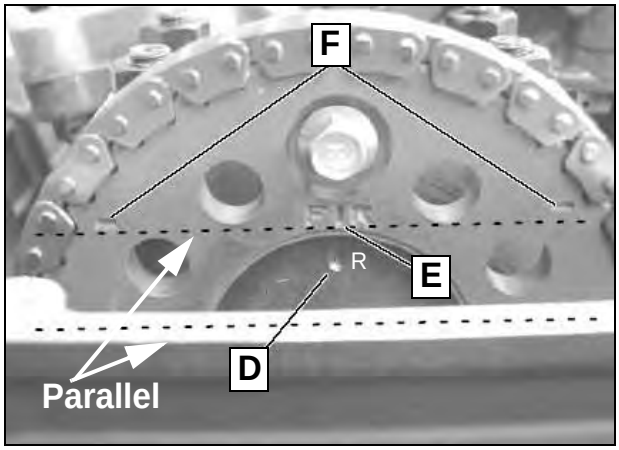

7. Align camshaft with sprocket hole and install top sprocket bolt finger tight.
8. Apply engine oil to rear cam chain tensioner. Tensioners are not interchangeable due to the length of the tensioner body. The rear tensioner is stamped with a “R”.

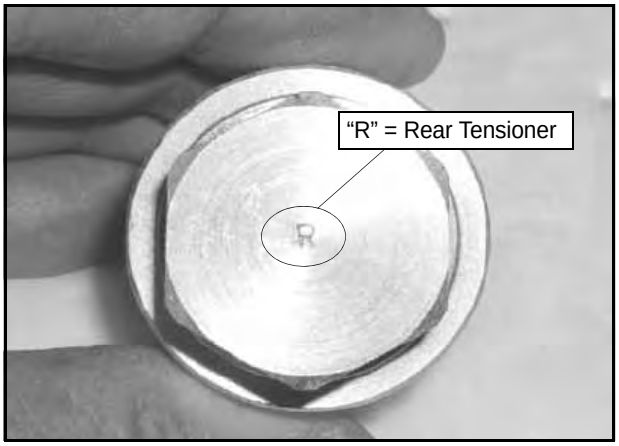

9. Install tensioner with a new sealing washer. Torque to 75 Nm (55 lb-ft.).
10. **Torque top sprocket bolt to 13.5 Nm (120 lb-in).**

© 2009 Polaris Sales Inc.

CAMSHAFT TIMING - REAR CYLINDER (cont.)

11. Check carefully to be sure rear cylinder camshaft timing is correct before proceeding:
    - Crankshaft secured by pin and locked in the rear cylinder TDC position.
    - Rear camshaft lobes facing down (”R” mark on cam aligned with “F/R” mark on sprocket).
    - Rear tensioner (stamped “R”) is installed and tight.
    - Outer marks on camshaft sprocket are parallel to valve cover gasket surface.
12. Remove locating pin from crankshaft and proceed to Step 13.

CAMSHAFT TIMING - FRONT CYLINDER

NOTE: Rear camshaft must be properly timed as shown in Step 6 on page 7.30 *before* you begin the front cylinder camshaft timing procedure.

13. Rotate crankshaft **clockwise 410°** to TDC on the front cylinder (exactly one full turn, plus an additional 50°).

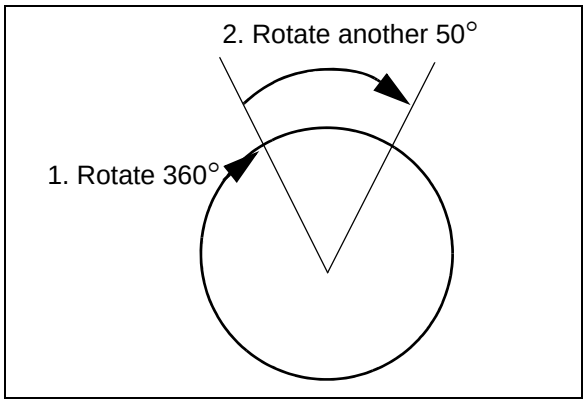

14. Rear camshaft double marks are now at the top. Install cam sprocket finger tight.

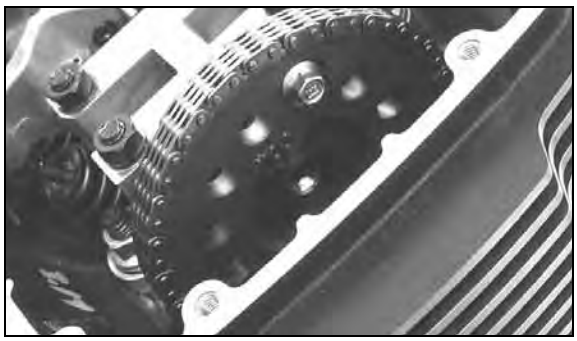

15. Insert an 8 mm (5/16″) pin through crankcase hole to hold the crankshaft in position at front cylinder TDC. Timing sprocket key (A) will be aligned with pin and front cylinder centerline.

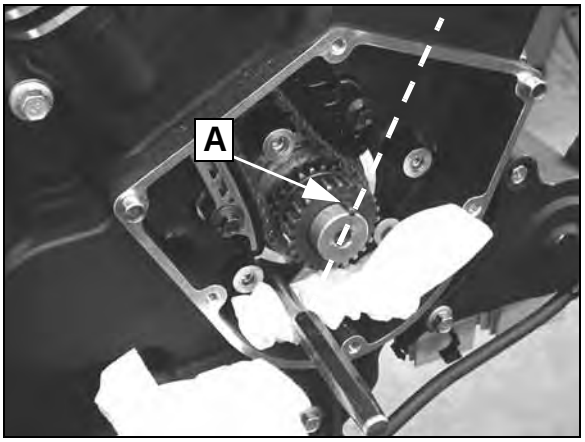

16. Install cam chain guide with front cylinder cam chain and sprocket. Insert pins (B) on upper end of guide into recess in cylinder head.

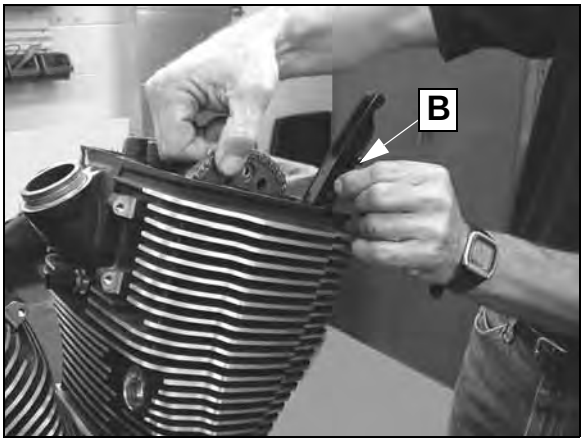

17. Install front cam chain over crankshaft sprocket.
18. Install front tensioner blade (C).

© 2009 Polaris Sales Inc.

19. Torque guide and tensioner blade bolts to specification.

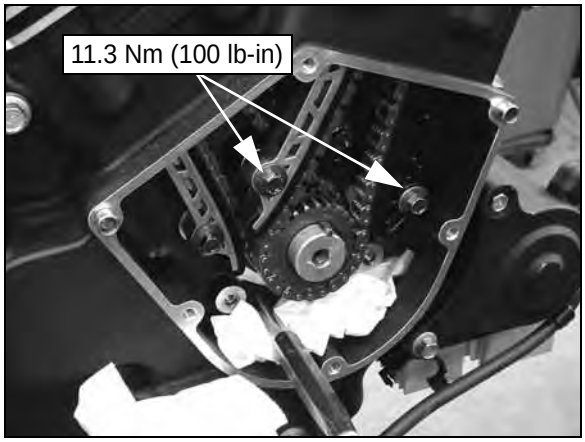

20. **After pin is installed, torque the rear cam sprocket bolt (installed in Step 14) to 13.5 Nm (120 lb-in.)**

21. Rotate front camshaft slightly so lobes are pointing DOWN.

22. Install sprocket on camshaft with two lines on sprocket (D) parallel to valve cover gasket surface (E).

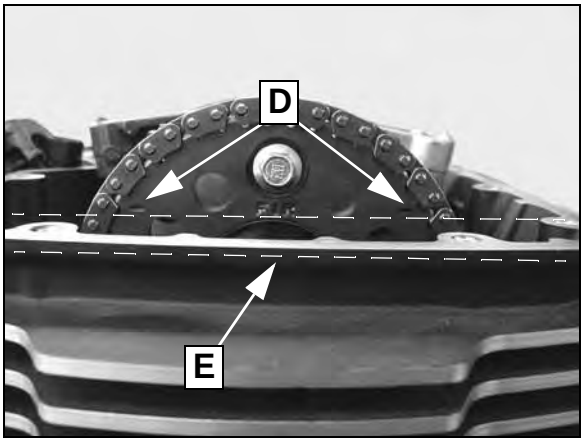

23. **Install top camshaft sprocket bolt finger tight. Do not torque the bolt until front tensioner is installed.**

24. Apply engine oil to front cam chain tensioner and damper. Push damper (F) squarely into tensioner bore in cylinder, and push it past the first 4 or 5 threads.

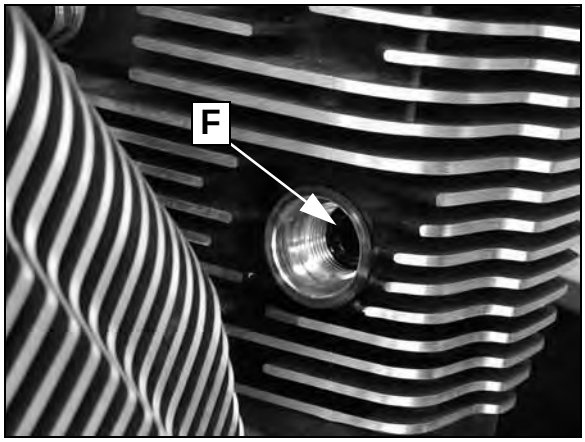

25. Install tensioner with a new sealing washer. Torque to 75 Nm (55 lb-ft).

26. **Torque sprocket bolt to 13.5 Nm (120 lb-in.).**

27. Verify camshaft timing by comparing to Ill. 1 on page 7.8.

28. Remove TDC locating pin from crankcase and rotate engine clockwise until the remaining front camshaft sprocket bolt hole is accessible.

29. **Install sprocket bolt. Torque to 13.5 Nm (120 lb-in.).**

NOTE: Be sure all camshaft sprocket bolts have been installed and properly tightened.

© 2009 Polaris Sales Inc.

30. Fill cam carrier area of both front and rear cylinders with Victory engine oil.

31. Rotate crankshaft clockwise approximately three complete revolutions and stop on front cylinder TDC on the compression stroke.

32. Again compare camshaft timing to Ill. 1 on page 7.8 to verify the timing is correct.

33. Install valve covers (page 7.9).

34. Install bottom cam chain guide. Torque screws to 11.3 Nm (100 lb-in).

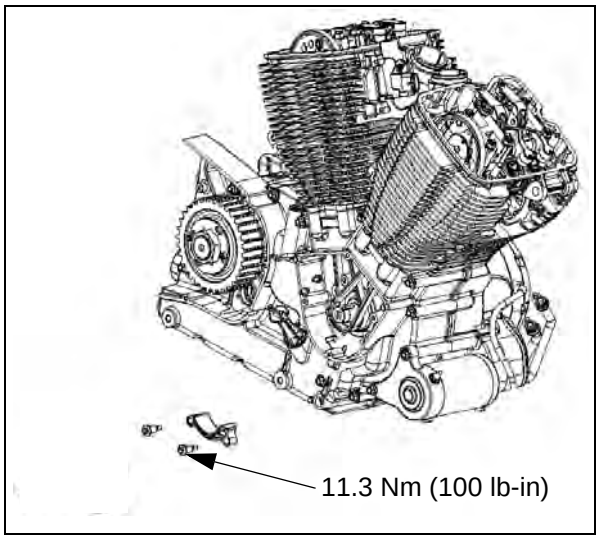

35. Clean threads of crankshaft and retaining bolt with Loctite® Primer N.
36. Apply 2 drops of Loctite® 262 (red) to bolt threads (not required if using a new bolt which has a pre-applied locking agent).
37. Install ignition timing wheel and torque bolt to specification. Allow adequate cure time for Loctite® 262 as directed on container.

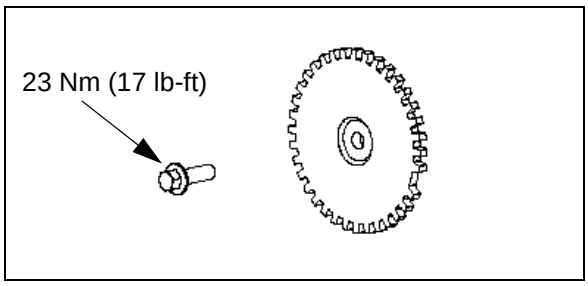

© 2009 Polaris Sales Inc.

TROUBLESHOOTING, CYLINDER HEAD AND VALVE TRAIN

Cylinder head, valve train and piston/cylinder problems are usually detected by an engine compression test. Other problems associated with this area of the engine are external fluid leaks, excessive use of oil or abnormal noises. Troubleshooting involves the use of:

- Leak down (cylinder leakage test) or a compression gauge
- Visual inspection for the source and cause of a fluid leak
- Listening to the engine with a stethoscope to determine source of abnormal noise

The troubleshooting table below lists problems and possible causes, parts affected, and repair suggestions. Thoroughly investigate the problem and possible solution before disassembling the engine to replace suspect parts.

PROBLEM	POSSIBLE CAUSE	PART(s) AFFECTED	REPAIR RECOMMENDED
Hard Starting Won't Start Excessive Lifter Noise	Low Compression	Lifter(s) locked	Replace lifter(s)
		Collapsed Hydraulic Lifter(s). Lifter Extremely Noisy.	Bleed Lifter Noise will typically stop after 10-15 minutes of high idle operation. If lifter will not bleed, replace lifter.
		Worn Valve Guide(s)	Replace Valve Guide(s).
		Poor Seating of Valve(s)	Repair or Replace
		Broken Valve Springs	Replace
		Spark Plug Not Seated	Torque to Specifications
		Incorrect Valve Timing	Repair
		Valve Stuck Open	Repair
		Cylinder Head Gasket Leak	Repair
		Slow Starter Motor	See Electrical Section
		Worn Rings, Piston, or Cylinder	See Cylinder/Piston Section
		Ignition Problem	See Ignition Section
		Fuel Problem	See F.I. Section
Electric Starter Straining to Turn Engine Over	High Compression	Excessive carbon build-up in combustion chamber.	Use "Carbon Clean" fuel system additive or disassemble engine to de-carbon combustion chamber.
Abnormal Pre-ignition	Excessive Starter Load	Internal Engine / Drive Components Seized or Binding	Determine Cause of Seizure or Binding
Poor Idle Quality	Low Compression	Collapsed Hydraulic Lifter(s). Lifter Extremely Noisy.	Air trapped in lifter. Noise will stop after 10-15 minutes of high idle operation. If air will not bleed, replace lifter.
		Poor Seating of Valve(s)	Repair or Replace

(Continued on next page)

© 2009 Polaris Sales Inc.

PROBLEM	POSSIBLE CAUSE	PART(s) AFFECTED	REPAIR RECOMMENDED
Poor Idle Quality	Air leak	Mounting Surfaces, Hoses	Repair Air Leak
	IAC System Fault	Inspect IAC System Hoses	Repair Air Leak or restriction in IAC System
	Fuel Mixture Rich Fuel Mixture Lean	F.I. System F.I. System / Inlet Tract	Refer to Chapter 5 Refer to Chapter 5
	Ignition Misfire	Ignition System	Refer to Chapter 17
	Excessive Oil in Combustion Chamber	Valve guides	Replace
	Excessive Oil in Combustion Chamber	Worn Rings, Cylinder, or Piston	Refer to Chapter 8
		Engine Oil Overfilled	Correct
	Valves Not Opening Fully	Worn Cam Shaft or Rocker Arms	Replace
Engine Noise	Valve Train Area	Collapsed Hydraulic Lifter(s). Lifter Extremely Noisy.	Air trapped in lifter. Noise will stop after 10-15 minutes of high idle operation. If lifter will not bleed, replace lifter.
		Lifter(s) Locked	Replace Lifter(s)
		Broken or Weak Valve Springs	Replace
		Worn Camshaft or Rocker Arm	Replace
		Rocker Arm Roller Bearing Damage	Replace
		Cam Journal Worn or Damaged	Replace
	Piston/Cylinder Area	Worn Pistons and/or Cylinders	Replace
		Excessive Carbon Build-up in Combustion Chamber	Clean
		Worn Piston Pin, Piston Pin Bore and/or Small End of Connecting Rod	Replace
		Worn Piston Rings or Piston Ring Lands.	Replace
Engine Noise	General (May apply to all areas below)	Exhaust leak	Remove exhaust and seal
	Timing Chain Area	Stretched Chain	Replace
		Worn Sprockets	Replace
		Tensioner Not Working	Replace
	Primary Cover Area	Clutch	Refer to Chapter 9
		Flywheel	Refer to Chapter 9
		Starter System	Refer to Chapter 18
		Torque Compensator	Refer to Chapter 9
	Bottom End Area	Main Bearings	Refer to Chapter 10
		Rod Bearings	Refer to Chapter 10
		Loose Side Clearance	Refer to Chapter 10
	Transmission Area	Bearings	Refer to Chapter 10
		Misplaced Circlips	Refer to Chapter 10
		Incorrect Side Clearance	Refer to Chapter 10

© 2009 Polaris Sales Inc.

PROBLEM	POSSIBLE CAUSE	PART(s) AFFECTED	REPAIR RECOMMENDED
Poor high speed running	Air Intake Problem		Refer to Chapter 5
	F.I. System Problem		Refer to Chapter 5
	Ignition Problem		Refer to Chapter 17
	Valve Float	Weak Valve Springs	Replace
	Insufficient Valve Travel	Worn Camshaft/Rocker Arms	Replace
	Valves Opening & Closing at Wrong Time	Incorrect Valve Timing	Correct
Lack of power in all RPM ranges	Low Compression	Worn Piston, Rings, Cylinder	Replace
	Low Compression	Poor Valve Seating	Repair/Replace
	Valves Opening & Closing at Wrong Time	Valve Timing Incorrect	Correct
	Incorrect Valve Clearance	Hydraulic Lifter Bleeding Down	Replace
	Lifter(s) Locked	Debris in Lifter	Replace lifter(s)
	Collapsed Hydraulic Lifter(s). Lifter Extremely Noisy.	Air Trapped in Lifter. Noise will stop after 10-15 minutes of high idle operation. If lifter will not bleed, replace lifter.	Replace Lifter
	Valve Float	Weak Valve Springs	Replace
	Insufficient Valve Travel	Worn Camshaft/Rocker Arms	Replace
	Ignition Problem		Refer to Chapter 5
	F.I. Problem		Refer to Chapter 5
	Air Intake Problem		Refer to Chapter 5
	Oiling Problem	Oil Overfilled	Correct
	Vacuum Leak	Mounting Surfaces, Hoses	Correct
Using/Burning Oil	Oil in Combustion Chamber	Oil Overfilled	Correct
	Oil Past Rings	Worn or Damaged Piston, Rings, Cylinder	Replace
	Oil Past Valve Guides	Worn Valve Guides	Replace
		Worn Valve Guide Seals	Replace

© 2009 Polaris Sales Inc.

CHAPTER 8
CYLINDER & PISTON

CYLINDER & PISTON 8.2
GENERAL 8.2
BASE GASKET SEALING & CYLINDER STUD TORQUE 8.2
PISTON RING PROFILE AND ORIENTATION 8.2
SPECIFICATIONS 8.3
SPECIAL TOOLS 8.3
CYLINDER REMOVAL 8.4
CYLINDER INSPECTION 8.4
CYLINDER BORE MEASUREMENT 8.4
PISTON TO CYLINDER CLEARANCE WORKSHEET 8.5
CYLINDER WARPAGE MEASUREMENT 8.6
PISTON & PISTON RING REMOVAL 8.6
PISTON & PISTON RING INSPECTION 8.6
PISTON PIN / PIN BORE INSPECTION 8.7
CYLINDER STUD REPLACEMENT 8.8
PISTON RING INSTALLATION 8.8
PISTON INSTALLATION 8.9
CYLINDER INSTALLATION 8.10
TROUBLESHOOTING, CYLINDER & PISTON 8.11
TROUBLESHOOTING (CONT.) 8.12

© 2009 Polaris Sales Inc.

CYLINDER & PISTON

GENERAL

NOTE: Clean the machine thoroughly before removing engine from frame.

- This section covers service of the cylinder, piston and rings. The engine must be removed from the frame to perform the procedures in this section. Refer to Chapter 6 for engine removal and installation.
- Mark and store all mated parts for assembly. Assemble engine by putting used parts that pass inspection back in the same location.
- Machined and mated surfaces are very delicate. Handle and store all parts in such a way that the mating surfaces will not be damaged.
- Many parts require assembly lubrication. Follow the assembly lubrication procedures carefully.

Moly assembly paste PN: 2871460

- There are many precision measuring steps in this section. If you are not sure of your capabilities in these areas, have a competent machinist perform the precision part inspection operations.
- Cleanliness of parts is critical to engine life and proper parts inspection. Use clean solvent and hot, soapy water to clean parts. Dry with compressed air before inspection and engine assembly. Coat parts with fresh lubricant to prevent oxidation after cleaning.

BASE GASKET SEALING & CYLINDER STUD TORQUE

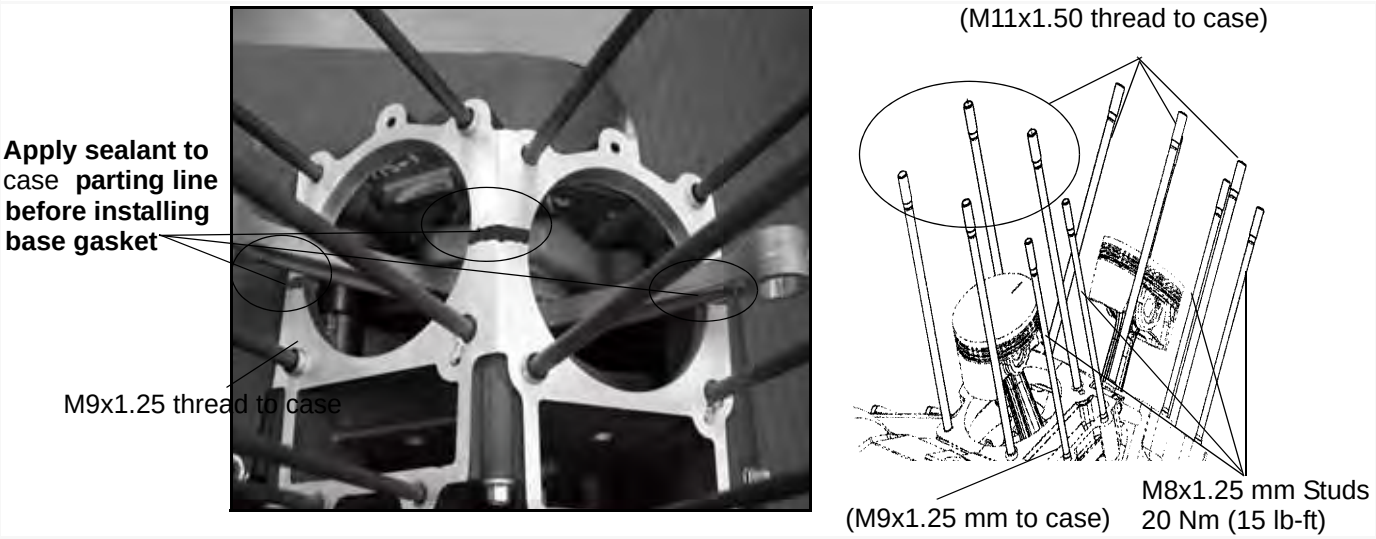

PISTON RING PROFILE AND ORIENTATION

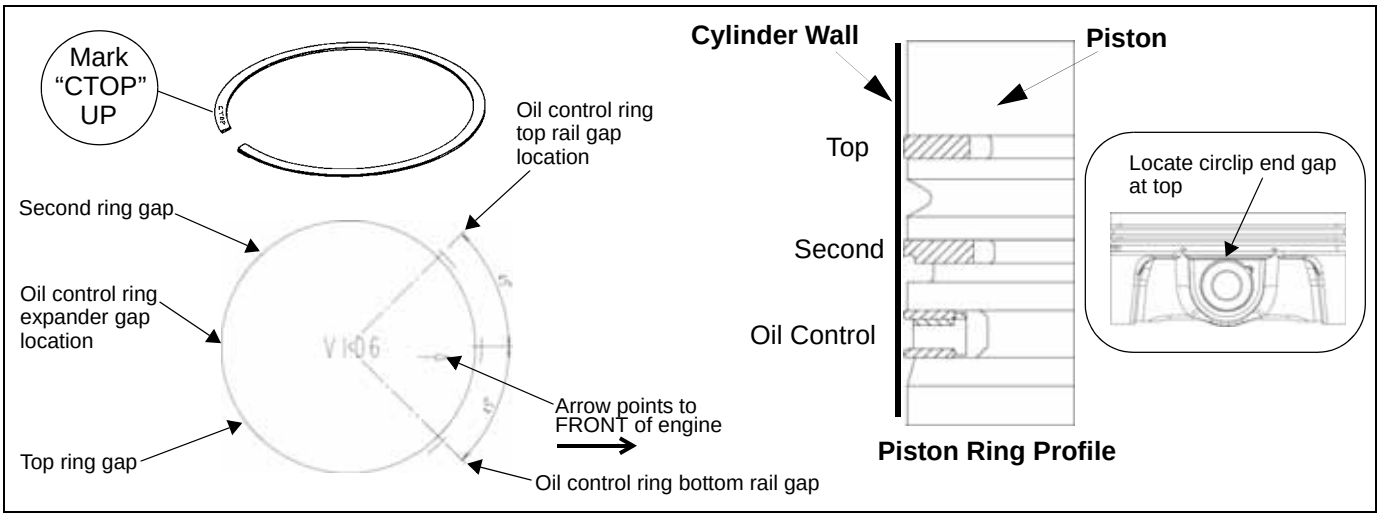

© 2009 Polaris Sales Inc.

SPECIFICATIONS

CYLINDER & PISTON			
Item		**Standard**	**Service Limit**
Cylinder	I.D.	100.987 - 101.013 (3.9759" - 3.9769")	Check taper and out-of-round
	Out of Round	Measure 66mm up from base gasket surface	0.05 mm (.002")
	Taper		0.05 mm (.002")
	Gasket Surface Warpage	→	.1mm max. (.0039")
Piston	Piston Mark Direction	Piston orientation is determined by arrow on piston crown. Position BOTH pistons so arrows point to front of engine.	
	Piston O.D. (Nominal) (Measured 10mm up from bottom of skirt, 90 degrees to pin)	100.946 - 100.964mm (3.9742 - 3.9750")	Replace if piston-to-cylinder clearance is excessive with good cylinder
	Piston Pin Hole I.D.	22.006 - 22.012 mm (.8664 - .8666")	22.047 mm (.8680")
	Piston Pin O.D.	21.995 - 22.000 mm (.8659 - .8661")	21.96 mm (.864")
	Piston to Cylinder	.023 - .067 mm (.0009 - .0026")	.15 mm (.006")
	Piston to Piston Pin	.006 - .017 mm (.0002 - .0007")	.035 mm (.0014")
Piston Ring Clearances	Ring End Gap - Top (Installed) Ring End Gap - 2nd (Installed) Ring End Gap - 3rd (Installed)	.15 - .40 mm (.006 - .016") .33 - .53 mm (.013 - .021") .15 - .35 mm (.006 - .014")	.80 mm (.031") 1.11 mm (.043") .80 mm (.031")
	Piston Ring Marks	--	"CTOP" mark must face UP on all rings. page 8.2
Piston Ring to Ring Land			
	Top Ring (1.2mm ring thickness)	.02 - .060 mm (.0008 - .0024")	.11 mm (.0043")
	2nd Ring (1.2mm ring thickness)	.02 - .060 mm (.0008 - .0024")	.11 mm (.0043")
	Oil Control Ring	.03 - .17 mm (.001 - .0067")	.26 mm (.010")

SPECIAL TOOLS

Piston ring compressor pliers: PV-43570-1

Piston ring compressor band: PV-43570-2

Cylinder bore gauge: PV-3017

Straightedge, feeler gauge, precision measuring instruments: Refer to Chapter 1 or Commercially available

Protective sleeves for pistons / studs: Commercially available

© 2009 Polaris Sales Inc.

CYLINDER REMOVAL

1. Remove engine from frame (Chapter 6).
2. Remove cylinder head(s) (Chapter 7).

3. Remove cylinder(s). Support pistons while removing cylinders so they do not fall into the cylinder studs. Use a section of hose (A) to protect piston rings from contact with the studs.
4. Clean gasket surfaces of cylinders thoroughly.

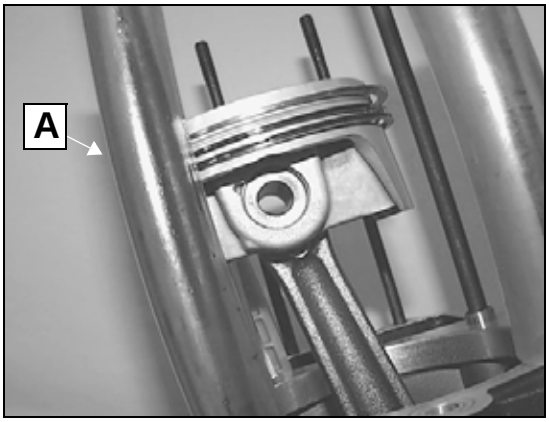

CAUTION

Careless handling of cylinder, pistons or rings may cause irreparable damage. Do not damage gasket surfaces during cleaning.

CYLINDER INSPECTION

1. Visually inspect cylinder bores for scratches and wear.
2. Inspect gasket surfaces for scratches or other damage that may cause an oil leak.

CYLINDER BORE MEASUREMENT

1. Measure each cylinder bore in 6 places to determine:
   - Cylinder Bore Inside Diameter
   - Cylinder Taper and Out of Round

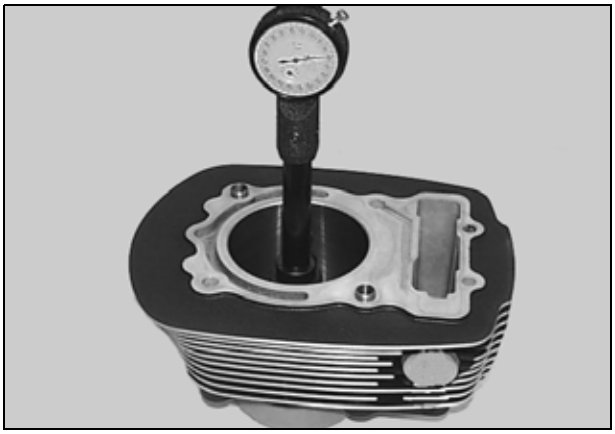

2. Use maximum measurement to determine wear.
3. Use the worksheet provided on page 8.5 to record measurements and calculate the clearance.

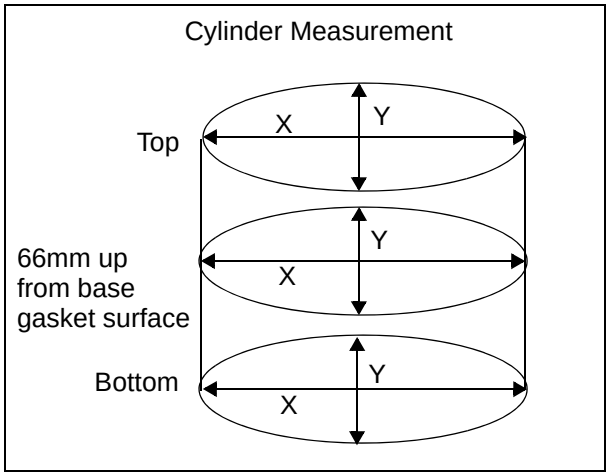

© 2009 Polaris Sales Inc.

PISTON TO CYLINDER CLEARANCE WORKSHEET

Front Cylinder	Recorded Measurement	Specification
Top “X”		Taper Service Limit: .05mm (.002")
Middle “X”		
Bottom “X”		
Top “Y”		
Middle “Y”		
Bottom “Y”		
Difference between largest “Y” measurement and smallest “Y” measurement	Taper for “Y” axis:	
Difference between largest “X” measurement and smallest “X” measurement	Taper for “X” axis:	
Largest difference between any “X” axis measurement and “Y” axis measurement	Cylinder Out-of-Round:	Out-of-Round Service Limit: .05mm (.002")
Piston Skirt Measurement (page 8.6)		
Difference between largest “X” axis measurement and piston measurement	Piston-to-Cylinder Clearance*	Piston-to-Cylinder Clearance Service Limit: .15 mm (.006")

Rear Cylinder	Recorded Measurement	Specification
Top “X”		Taper Service Limit: .05mm (.002")
Middle “X”		
Bottom “X”		
Top “Y”		
Middle “Y”		
Bottom “Y”		
Difference between largest “Y” measurement and smallest “Y” measurement	Taper for “Y” axis:	
Difference between largest “X” measurement and smallest “X” measurement	Taper for “X” axis:	
Largest difference between any “X” axis measurement and “Y” axis measurement	Cylinder Out-of-Round:	Out-of-Round Service Limit: .05mm (.002")
Piston Skirt Measurement (page 8.6)		
Difference between largest “X” axis measurement and piston measurement	Piston-to-Cylinder Clearance*	Piston-to-Cylinder Clearance Service Limit: .15 mm (.006")

Compare recorded measurement to specifications. If measured value exceeds service limit replace the appropriate part.

NOTE: The cylinders are Ni-SiC plated and cannot be reconditioned by boring or honing. If excessive surface damage, taper or out-of-round exists, the cylinder must be replaced.

- If the piston-to-cylinder clearance exceeds the service limit, **measure a new piston and re-calculate the clearance.** If the piston-to-cylinder clearance exceeds the service limits with a new piston, the cylinder must be replaced.

© 2009 Polaris Sales Inc.

CYLINDER WARPAGE MEASUREMENT

1. Inspect cylinder for warpage at cylinder head surface and base gasket surface.

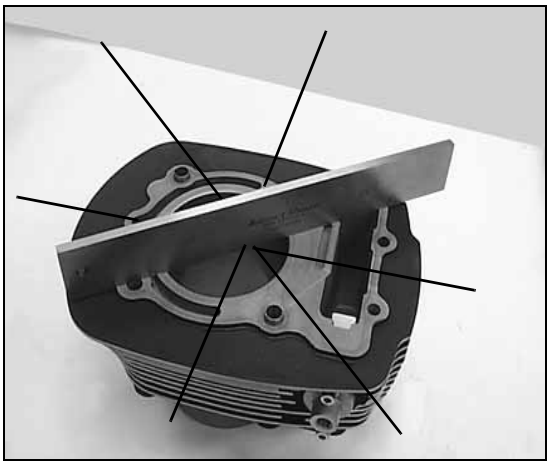

2. Place a straight edge diagonally across cylinder mating surfaces in several positions. Attempt to slide a .05mm (.002") feeler gauge under the straight edge in each position.
3. Replace cylinder is warped beyond the service limit.

PISTON & PISTON RING REMOVAL

1. Cover crankcase with a clean shop towel to prevent piston clip from falling into the crankcase.
2. Remove the left piston pin circlip.
3. Push piston pin out to left side of engine and remove the piston.

4. Rotate rings in piston groves. Rings should rotate freely in grooves.
5. Clean carbon deposits from piston.
6. Spread rings only wide enough to remove them from piston. Spreading rings too wide will damage them.
7. Clean piston ring grooves. Break or cut a piston ring in half. File or grind one edge square and remove all burrs. Use this piston ring to carefully clean piston ring grooves.

NOTE: A soft wire brush is permissible to clean top of piston. Do not use a wire brush to clean sides of piston or the piston ring groves.

PISTON & PISTON RING INSPECTION

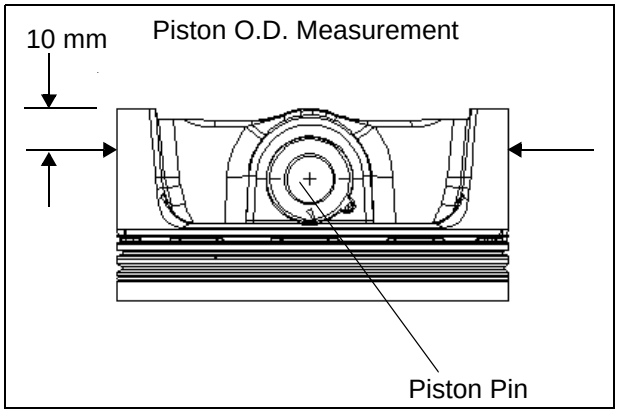

1. Visually inspect piston for cracks, excessive wear, scoring, etc.
2. Measure piston skirt O.D. (90° to pin and 10 mm from bottom of piston skirt). Compare to specifications on page 8.3. Replace piston if worn beyond the service limit.
3. Calculate Piston to Cylinder Clearance. Subtract piston O.D. from cylinder bore I.D. and compare to specification listed on page 8.3.

Piston to Cylinder Clearance Calculation

Cylinder I.D.
\- Piston O.D.

= Piston to Cylinder Clearance

4. Replace parts that do not meet specification.

NOTE: If piston-to-cylinder clearance exceeds service limit, **measure a new piston and re-calculate clearance**. If piston-to-cylinder clearance exceeds service limits with a new piston, cylinder must be replaced.

© 2009 Polaris Sales Inc.

5. Use a piston to push each ring squarely into cylinder bore from bottom (push rings 25-50mm into cylinder).

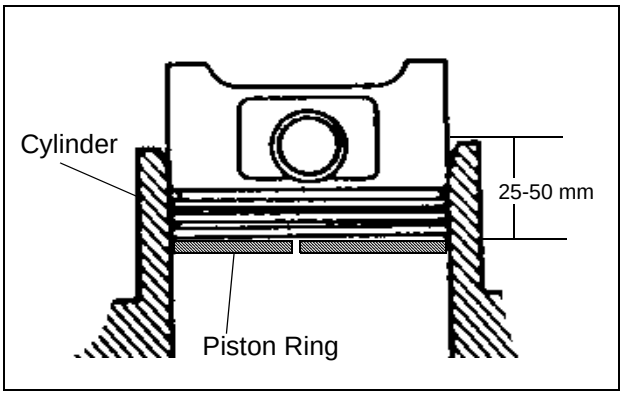

6. Measure installed ring end gap with a feeler gauge and compare to specification listed on page 8.3. If either ring exceeds the service limit, replace ring set.

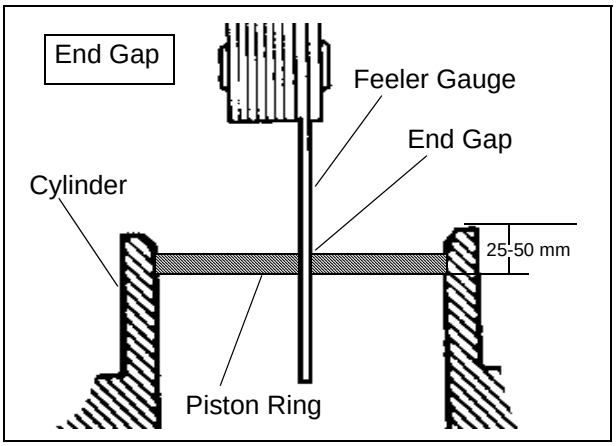

7. Install rings onto a clean piston. Push rings in until they are flush with piston. Using a feeler gauge (A), measure side clearances for the 1st & 2nd rings. If any of clearances exceed limit, replace piston and piston rings.

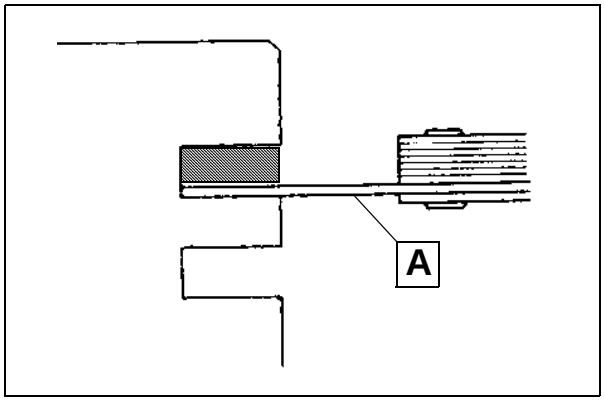

PISTON PIN / PIN BORE INSPECTION

1. Measure piston pin hole I.D. in four locations with a telescoping gauge. Record the smallest.

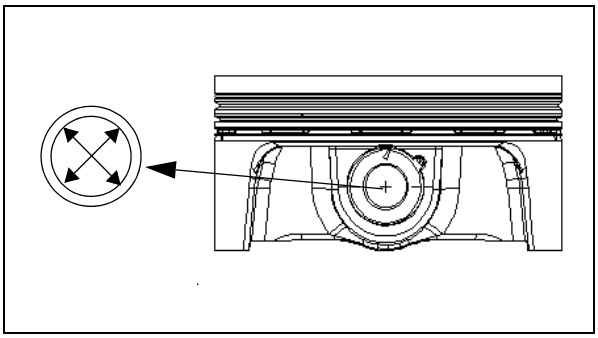

2. Measure piston pin O.D. at three locations. Record largest measurement.

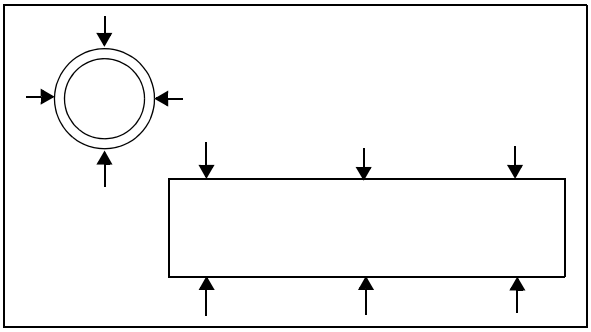

3. Calculate piston pin-to-piston clearance. Subtract pin O.D. from pin hole I.D.
4. Measure connecting rod small end I.D. at two locations.
5. Calculate connecting rod-to-piston pin clearance by subtracting pin O.D from rod hole I.D.

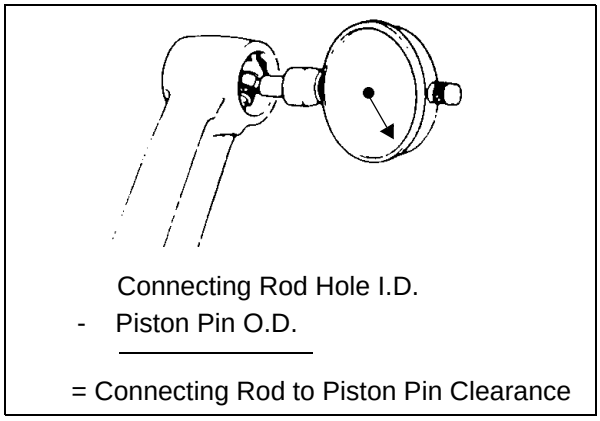

6. Compare measurements to specifications listed on page 8.3 and replace any worn parts.

© 2009 Polaris Sales Inc.

CYLINDER STUD REPLACEMENT

1. Use a stud remover to remove 10mm studs (A) and 8mm studs (B).

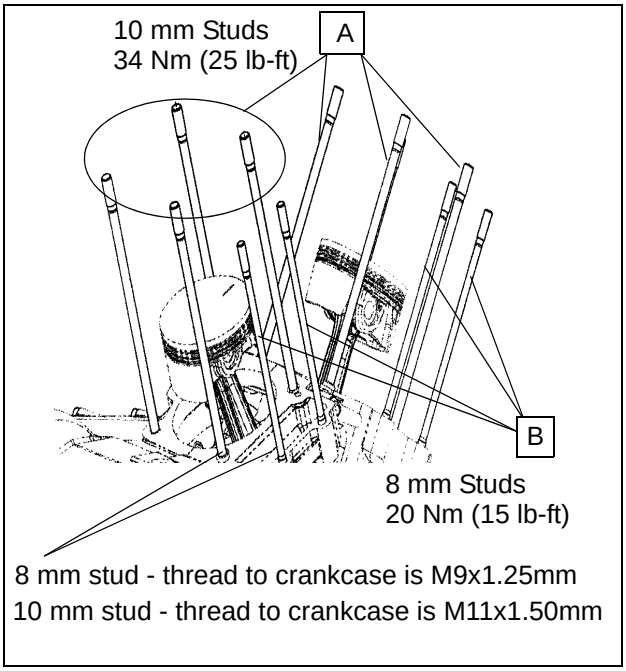

2. Clean threads in cases thoroughly.
3. Apply engine oil to stud threads.
4. Install studs and torque them to specification.

PISTON RING INSTALLATION

⚠ CAUTION

Rings may be damaged if expanded more than necessary to install them.

1. Carefully install oil control ring assembly (bottom ring) with “CTOP” mark facing up. The oil control ring consists of a backing spring and one rail component.
2. Install first and second rings with “CTOP” mark facing UP.

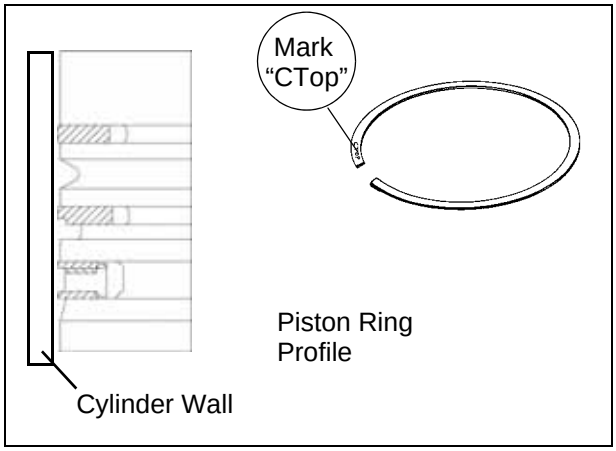

3. Make sure that rings rotate freely in grooves.
4. Locate ring end gaps as shown below in relation to arrow on piston crown.

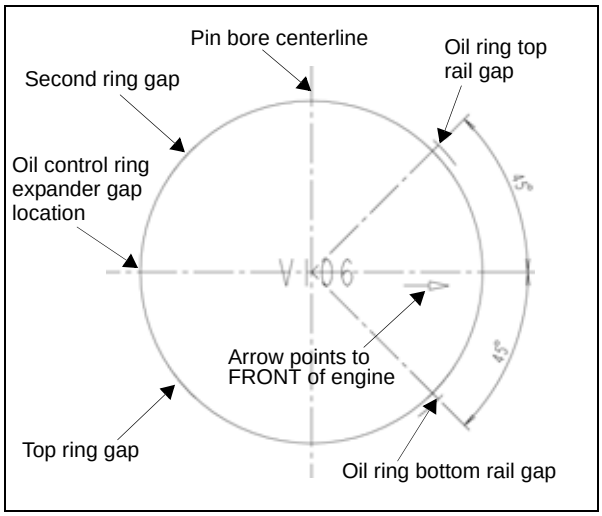

© 2009 Polaris Sales Inc.

PISTON INSTALLATION

The pistons are marked with an arrow on the crown. Install pistons on connecting rods with arrow (A) facing the FRONT of the engine.

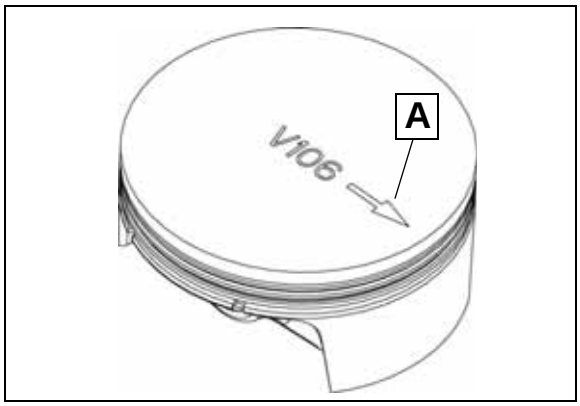

1. Place a clean shop towel over crankcase to prevent foreign material from entering crankcase.

2. Install a new circlip on one side of the piston with end gap facing UP (12:00 position.)

> **CAUTION**
>
> **Never reuse piston pin circlips.**

3. Apply assembly lube piston pin and I.D. of connecting rod small end.

Moly assembly paste PN: 2871460

4. Install piston over connecting rod with arrow on piston crown facing FRONT of engine.

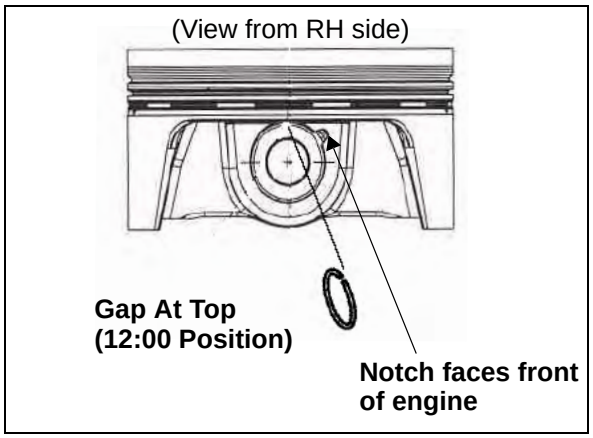

5. Push piston pin through rod and piston pin hole until it is stopped by circlip.

6. Install remaining circlip with end gap facing up (12:00 position.)

7. Make sure both piston circlips are seated properly in the groove.

© 2009 Polaris Sales Inc.

CYLINDER INSTALLATION

NOTE: Be sure all top end parts are ready for assembly. Sealant on crankcase parting line must not be allowed to dry before top end is assembled and torqued.

1. Wash cylinders with clean solvent first, then with hot soapy water.

2. Rinse cylinders with clear water and dry immediately with compressed air. Wipe cylinder bore with a clean white shop towel and engine oil.

3. Apply a light coat of engine oil to piston and rings.

4. Ensure cylinder alignment dowel pins are in place and gasket surfaces are clean and oil-free.

5. Apply a small amount of crankcase sealant to the crankcase parting lines on base gasket surface (A).

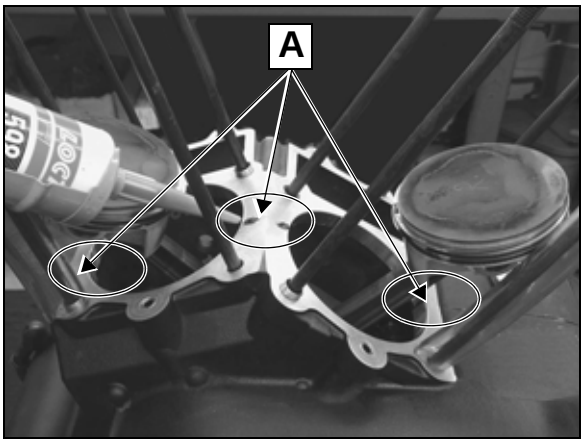

6. Install new cylinder base gaskets onto crankcase.

NOTE: Inspect all sealing surfaces carefully for scratches or imperfections. **DO NOT allow oil or grease to contact gaskets or sealing surfaces during the assembly process.**

7. Place a small amount of engine oil to inside surfaces of a piston ring compressor band.

Piston Ring Compressor Band:PV-43570-2

Piston Ring Compressor Pliers PV-43570-1

8. Install piston ring compressor over rings and compress rings into ring grooves.

> ⚠ CAUTION
>
> Be sure compressor band end gap does not align with any ring end gap when compressing the rings.

NOTE: Install cylinders in their original locations.

9. Remove protective covering from crankcase.

10. Carefully install cylinder(s) over piston/ring assembly. Do not force cylinder over piston. Monitor rings carefully. If a piston ring becomes dislodged from the ring compressor; remove cylinder, inspect ring carefully for damage.

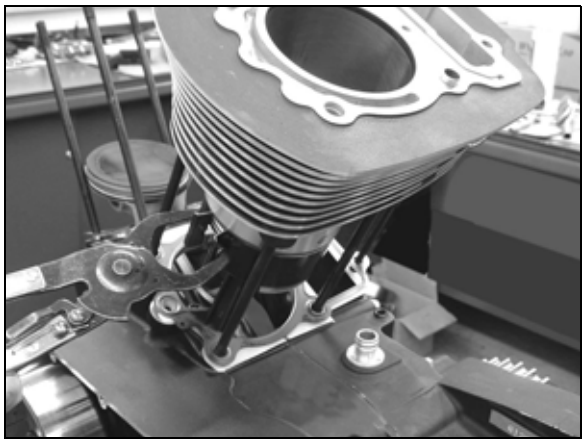

11. Remove piston ring compressor when rings are fully captive in cylinder.

12. Slide cylinder down over piston until seated to base gasket and crankcase surface.

13. Repeat for other cylinder.

14. Install cylinder head(s). (Chapter 7).

© 2009 Polaris Sales Inc.

TROUBLESHOOTING, CYLINDER & PISTON

PROBLEM	POSSIBLE CAUSE	AFFECTED PART(s)	REPAIR RECOMMENDED
Engine Hard Starting (or) Engine Will Not Start	Low Compression	Lifter(s) Locked	Refer to Chapter 7
		Collapsed Hydraulic Lifter(s). Lifter Extremely Noisy.	Refer to Chapter 7
		Worn Valve Guide(s)	Refer to Chapter 7
		Poor Seating of Valve(s)	Refer to Chapter 7
		Broken Valve Springs	Refer to Chapter 7
Poor High Speed Performance	Valve Float	Weak Valve Springs	Refer to Chapter 7
	Insufficient Valve Travel	Worn Camshaft/Rocker Arms	Refer to Chapter 7
	Valves Opening & Closing at Wrong Time	Valve Timing Incorrect	Refer to Chapter 7
	Ignition Problem		Refer to Chapter 18
	F.I. System Problem		Refer to Chapter 5
	Air Intake Problem		Refer to Chapter 5
Lack of Power in all RPM Ranges	Incorrect Valve Clearance	Hydraulic Lifter Bleeding Down	Refer to Chapter 7
	Collapsed Hydraulic Lifter(s). Lifter Extremely Noisy.	Air trapped in lifter. Noise will stop after 10-15 minutes of high idle operation. If air will not bleed, replace lifter.	Refer to Chapter 7
	Valve Float	Weak Valve Springs	Refer to Chapter 7
	Valves Opening & Closing at Wrong Time	Valve Timing Incorrect	Refer to Chapter 7
Engine Hard Starting	Fuel Delivery Problem	Low Fuel Pressure	Refer to Chapter 5
	Ignition Problem	No Spark or Weak Spark	Refer to Chapter 17
Engine Hard Starting (or) Engine Will Not Start	Low Compression	Spark Plug Not Seated	Torque Spark Plug
		Incorrect Valve Timing	Refer to Chapter 7
		Valve Stuck Open	Refer to Chapter 7
		Leaking Cylinder Head Gasket	Repair
		Slow Starter Motor	Refer to Chapter 18
		Worn cylinder, Pistons and/ or Rings	Replace parts that do not meet specification
		Ignition Problem	Refer to Chapter 17
		Fuel Problem	Refer to Chapter 5

© 2009 Polaris Sales Inc.

TROUBLESHOOTING (Cont.)

PROBLEM	POSSIBLE CAUSE	AFFECTED PART(s)	REPAIR RECOMMENDED
Engine Idles Poorly	Fuel Management Incorrect	Air leaks intake tract	Refer to Chapter 5
		IAC system malfunction, air leak, or restriction	Refer to Chapter 5
	Low Compression	Collapsed Hydraulic Lifter(s). Lifter Extremely Noisy	Refer to Chapter 7
		Lifter(s) Locked	Refer to Chapter 7
		Poor Seating of Valve(s)	Refer to Chapter 7
		Worn Cylinder, Pistons and/or Rings	Replace parts that do not meet specification
Lack of Power in all RPM Ranges	Insufficient Valve travel	Worn Camshaft/Rocker arms	Refer to Chapter 7
Lack of Power in all RPM Ranges	Low Compression	Worn Piston, Rings, Cylinder	Replace parts that are worn beyond the service limit
Leaks	Improper Assembly	Cylinder, Gaskets, Gasket Surfaces Incorrect Fastener Torque	Perform white powder test to determine leak path. Assemble parts clean and free of oil, grease, or debris. Torque fasteners properly
	Damaged gasket sealing surface(s)	Cylinder/Crankcase	Repair surface or replace part
Noise	Excessive piston to cylinder clearance	Piston / Cylinder	Replace parts that are worn beyond the service limit
	Excessive piston pin clearance (to piston or connecting rod)	Piston / Pin / Connecting Rod	Replace parts that are worn beyond the service limit
	Exhaust Leak	-	Inspect seal of exhaust system at cylinder head

© 2009 Polaris Sales Inc.

CHAPTER 9
CLUTCH, PRIMARY, & SHIFT LINKAGE

GENERAL 9.2
SPECIFICATIONS 9.2
- GENERAL 9.2
- SERVICE / MAINTENANCE 9.2

SPECIAL TOOLS 9.2
ASSEMBLY VIEWS & TORQUE VALUES 9.3
- HYDRAULIC CLUTCH HOSE ROUTING 9.3
- HYDRAULIC CLUTCH SYSTEM COMPONENTS 9.4
- CLUTCH (CABLE) ROUTING 9.5
- SHIFT LINKAGE / FOOTREST - FASTENER TORQUE 9.6
- PRIMARY COVER 9.7
- SHIFT MECHANISM 9.8

SERVICE PROCEDURES 9.9
- CAP PLATE & CAP PLATE SEAL REMOVAL / INSTALLATION 9.9
- CLUTCH PINION SHAFT REMOVAL / BEARING INSPECTION 9.9
- CLUTCH PINION SHAFT SEAL REMOVAL & INSTALLATION 9.10
- CLUTCH PINION SHAFT INSTALLATION 9.10
- PRIMARY COVER REMOVAL 9.11
- SHIFT RATCHET REMOVAL & INSPECTION 9.12
- SHIFT RATCHET INSTALLATION 9.13
- SHIFT SHAFT BEARING & SEAL REPLACEMENT 9.13
- PRIMARY COVER INSTALLATION 9.14
- LOCKING THE CRANKSHAFT 9.14

CLUTCH SERVICE 9.15
- CLUTCH ASSEMBLY VIEW & TORQUE 9.15
- CLUTCH REMOVAL 9.16
- CLUTCH DISASSEMBLY 9.17
- CLUTCH INSPECTION 9.18
- CLUTCH ASSEMBLY 9.20
- CLUTCH INSTALLATION 9.22

. . . . . 9.23
- PRIMARY DRIVE ASSEMBLY VIEW & TORQUE 9.23
- TORQUE COMPENSATOR REMOVAL 9.24
- TORQUE COMPENSATOR INSPECTION 9.24
- TORQUE COMPENSATOR INSTALLATION 9.25
- ROTOR (FLYWHEEL) REMOVAL 9.26
- ROTOR (FLYWHEEL) INSTALLATION 9.27
- SPLIT GEAR REMOVAL 9.27
- SPLIT GEAR INSPECTION 9.27
- SPLIT GEAR INSTALLATION 9.28

STARTER DRIVE 9.29
- STARTER DRIVE REMOVAL / STARTER GEAR INSPECTION 9.29
- STARTER CLUTCH REMOVAL / INSPECTION 9.29

PRIMARY DRIVE GEAR 9.30
- PRIMARY DRIVE GEAR REMOVAL / INSPECTION 9.30
- STARTER TORQUE LIMIT CLUTCH INSPECTION 9.30
- PRIMARY DRIVE GEAR INSTALLATION 9.31
- STARTER GEAR / STARTER CLUTCH INSTALLATION 9.32

TROUBLESHOOTING 9.33

© 2009 Polaris Sales Inc.

GENERAL

SERVICE INFORMATION

- Clutch and external transmission shift linkage service can be accomplished with the engine in the frame.
- Internal transmission or internal shifting mechanism service requires engine removal and crankcase separation.
- Oil additives of any kind are not recommended by Victory. Using oil additives or oil of the wrong viscosity can have a detrimental affect on clutch performance, operation, and service life.
- Burnt clutch plates are not an indication of a defect. Burnt clutch plates can indicate that the plate service life has been exceeded, that a problem exists within the clutch system, that the clutch has been used improperly, or that the plates were contaminated by improper oil or additives.
- Victory 20W/40 motorcycle oil is recommended for all operating temperatures. If Victory 20W/40 oil is not available, a high quality 20W/40 motorcycle oil suitable for use in wet clutch transmissions can be used.
- Lubricate parts during assembly as described in the procedures.
- Corroded or sticking shift linkage pivot points can cause abnormal shifting. Replace any linkage components that are damaged or do not move freely, and lubricate at regular intervals.

SPECIFICATIONS

GENERAL

Item		Specifications
Clutch, Gear Shift, and Linkage	Clutch Type	Wet, Multi-Disk
	Clutch Operating Mechanism	Hydraulic
	Clutch Master Cylinder I.D.	12.7mm
	Torque Compensator	Belleville Spring Loaded Cam Assembly
	Primary Reduction Ratio	1.5 : 1
	Transmission Shift Mechanism	Manually Operated, Spring Centered
	Gearshift Pattern	1-N-2-3-4-5-6
	Clutch Spring (Diaphragm Type)	145 lb. (Green Paint Mark)

SERVICE / MAINTENANCE

CLUTCH / GEARSHIFT / LINKAGE		
Item	**Standard**	**Service Limit**
Clutch Fluid Type	DOT 4 Hydraulic Brake Fluid	-
Clutch Fluid Maintenance	Flush Every 2 Years	Refer to Periodic Maintenance Ch2
Clutch Lever and Pivots	Lubricate	Refer to Periodic Maintenance Ch2
Clutch Master Cylinder I.D.	12.7mm	12.743mm
Clutch Master Cylinder Piston O.D.	-	12.55mm

SPECIAL TOOLS

PRIMARY DRIVE SPECIAL TOOLS

Crankshaft Rotation Socket 2008: PV-48736

Clutch Shaft Holder: PV-45028

Clutch Spring Compressor: PV-45032

Engine Lock Tool: PV-43502-A

Rotor (Flywheel) Puller: PV-43533

1/4 inch (or 6mm) and 5/16 (or 8mm) Pin Punch or Flat Punch: Commercially available

Moly Assembly Paste (P/N 2871460)

© 2009 Polaris Sales Inc.

ASSEMBLY VIEWS & TORQUE VALUES

HYDRAULIC CLUTCH HOSE ROUTING

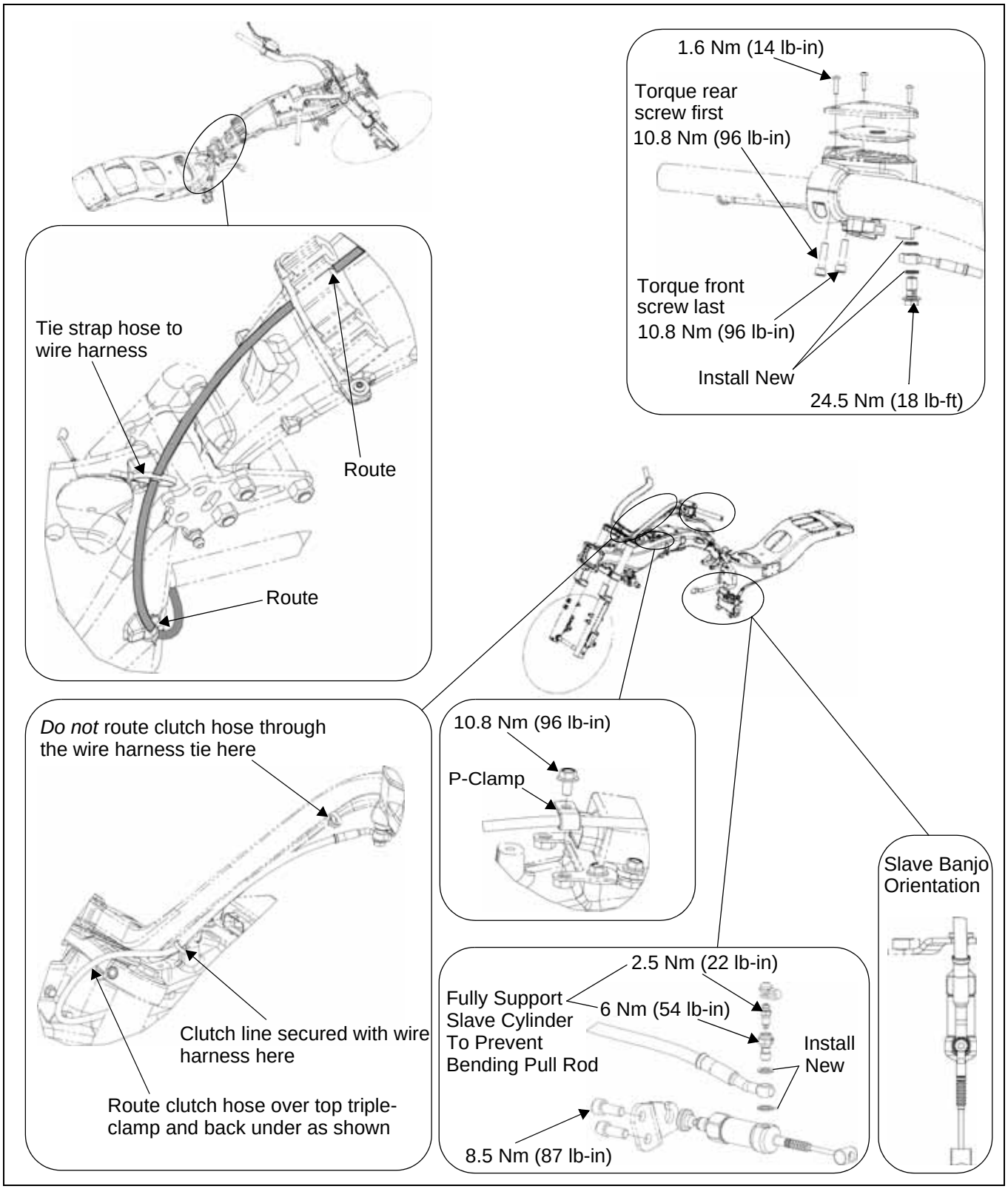

© 2009 Polaris Sales Inc.

HYDRAULIC CLUTCH SYSTEM COMPONENTS

See page 15.20 for clutch master cylinder service. The slave cylinder is not serviceable.

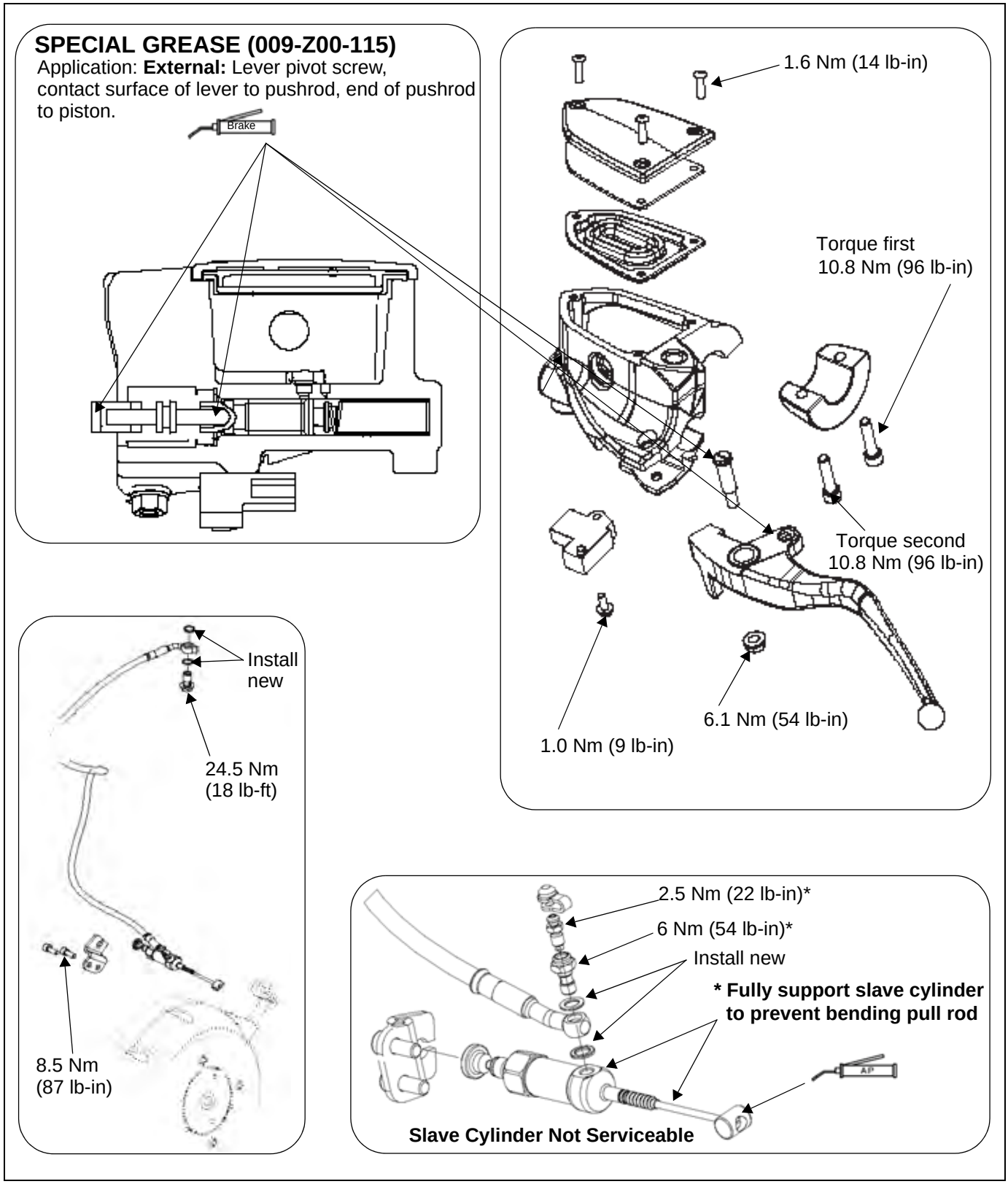

© 2009 Polaris Sales Inc.

CLUTCH (CABLE) ROUTING

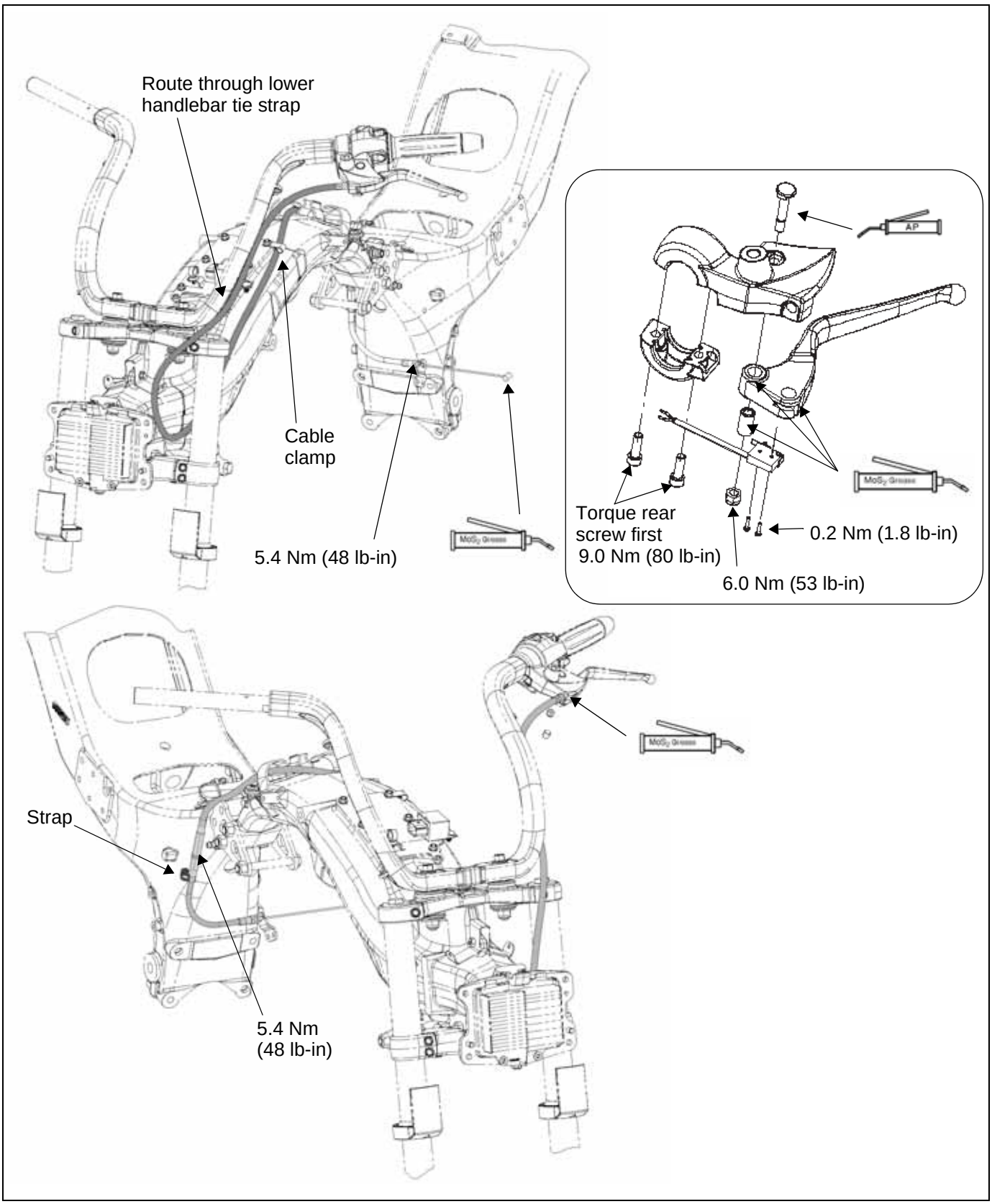

© 2009 Polaris Sales Inc.

SHIFT LINKAGE / FOOTREST - FASTENER TORQUE

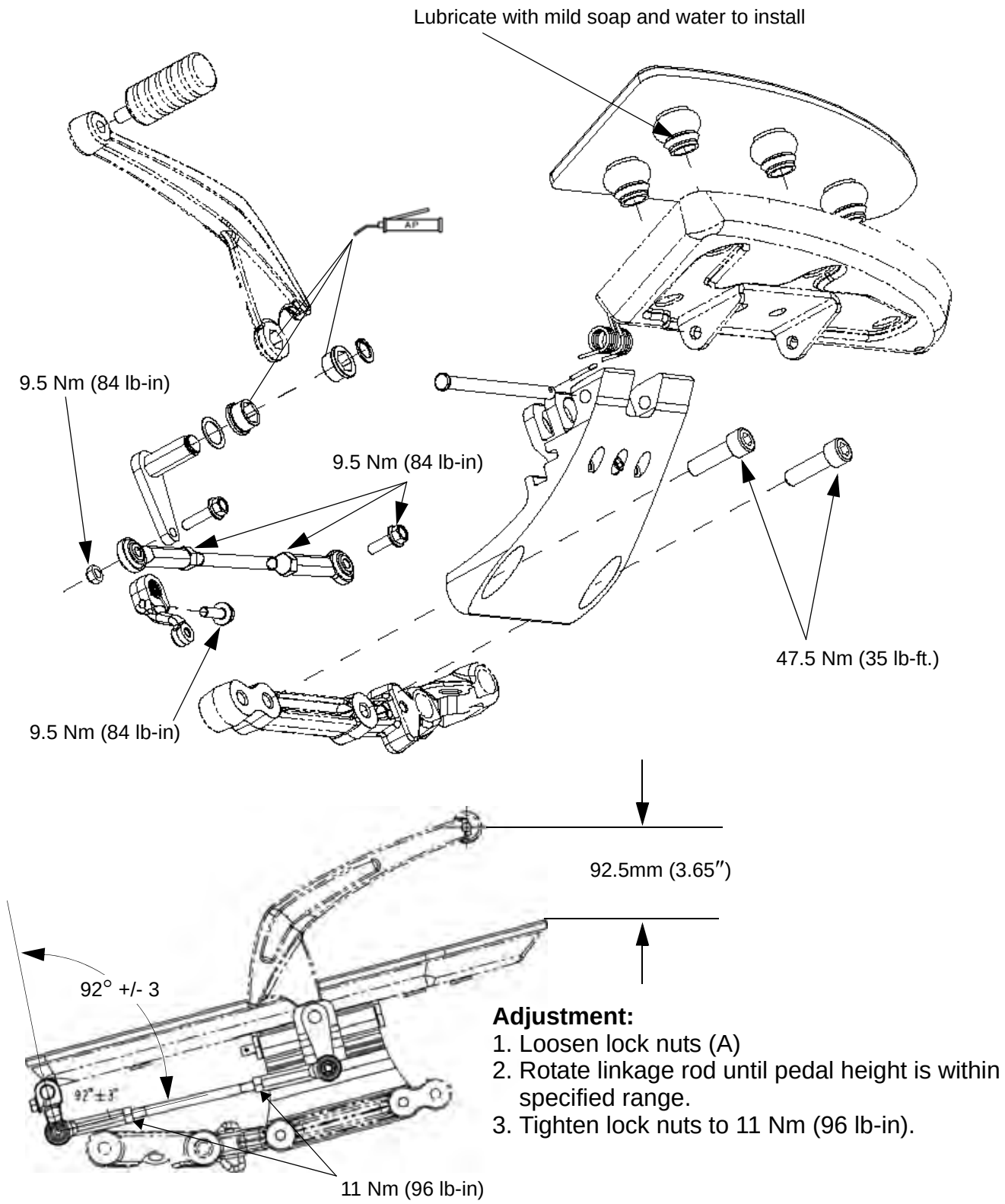

Adjustment:

1. Loosen lock nuts (A)
2. Rotate linkage rod until pedal height is within specified range.
3. Tighten lock nuts to 11 Nm (96 lb-in).

© 2009 Polaris Sales Inc.

PRIMARY COVER

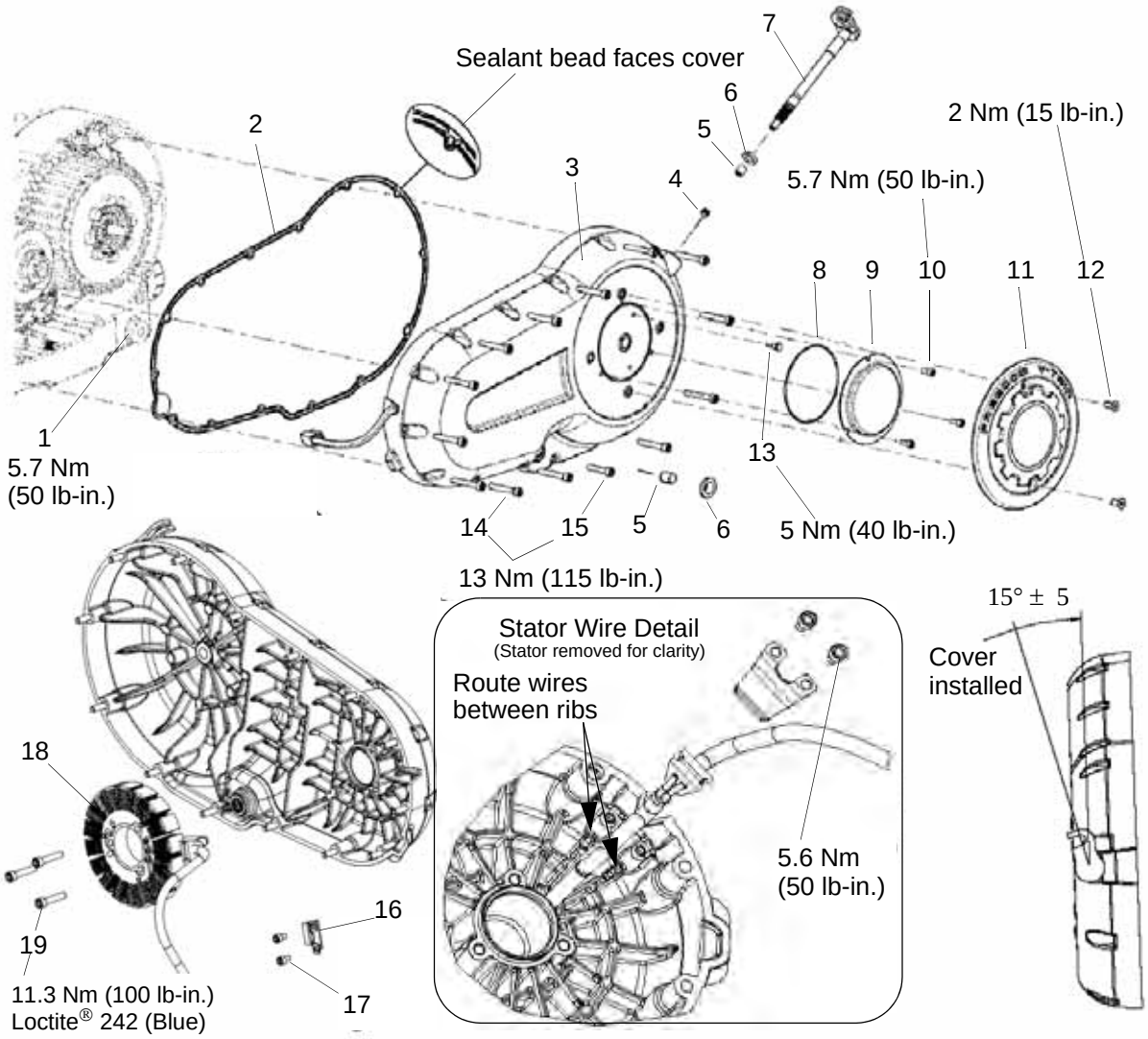

1. Sensor, Oil Pressure
2. Gasket, Primary Cover
3. Asm, Primary Cover (Incl. 4, 5, 6)
4. Bearing, Needle (1)
5. Bearing, Needle (2)
6. Seal (2)
7. Pinion, Clutch
8. O-Ring
11. Cap Plate
12. Screw (2) 6x14 Tapered
13. Screw, Dog Point (1) 8x16
14. Screw, (16) 6x40
15. Screw (1) 6x30
16. Bracket, Stator Wire
17. Screw, (2) 5x8

⚠ CAUTION

The rotor contains powerful magnets. Use caution when installing primary cover to avoid personal injury. Refer to page 9.14.

© 2009 Polaris Sales Inc.

SHIFT MECHANISM

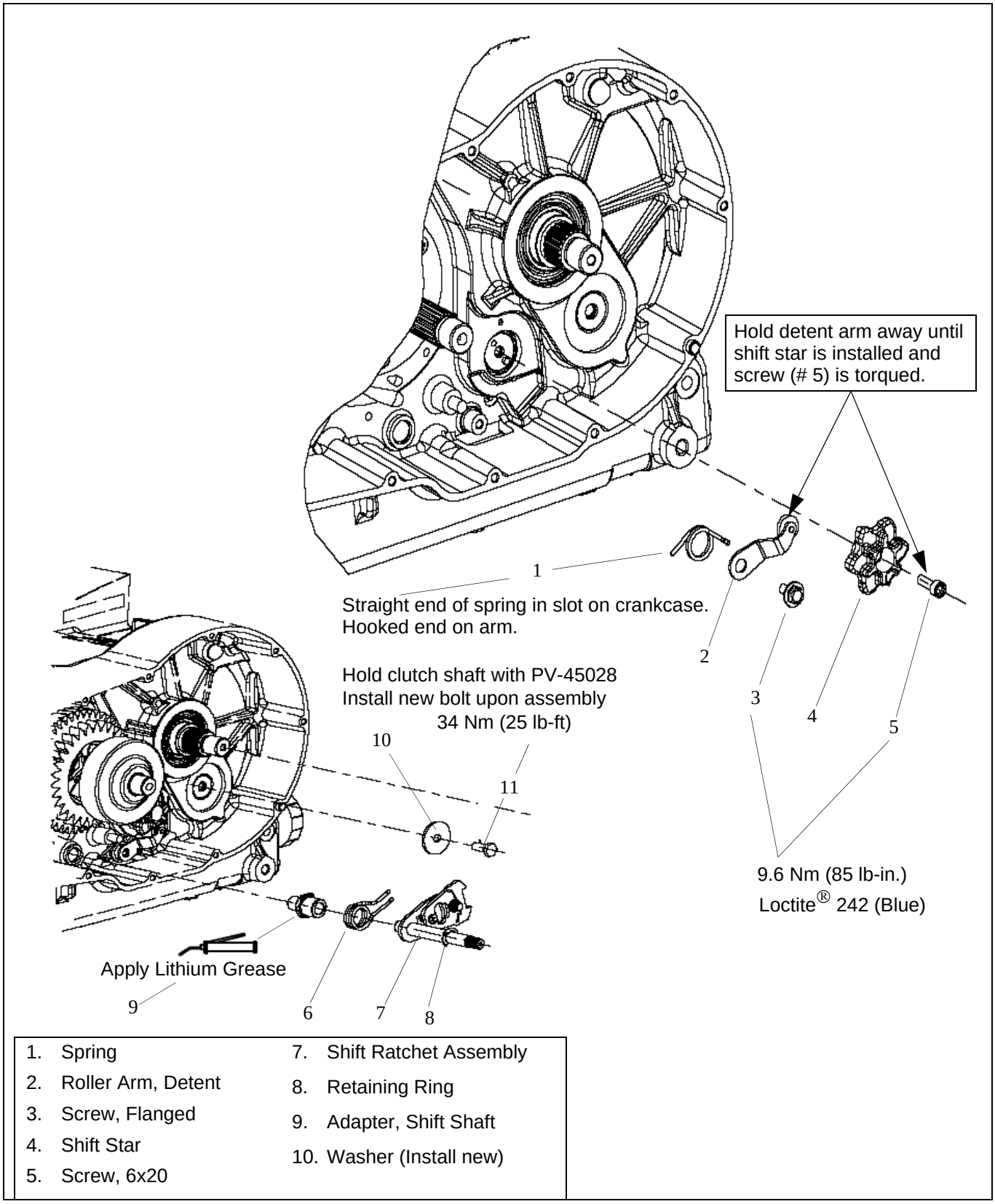

1. Spring	7. Shift Ratchet Assembly
2. Roller Arm, Detent	8. Retaining Ring
3. Screw, Flanged	9. Adapter, Shift Shaft
4. Shift Star	10. Washer (Install new)
5. Screw, 6x20	

© 2009 Polaris Sales Inc.

SERVICE PROCEDURES

CAP PLATE & CAP PLATE SEAL REMOVAL

1. Remove screws (A) and cap plate.
2. Remove three screws (B), cover (C), and O-ring (D).

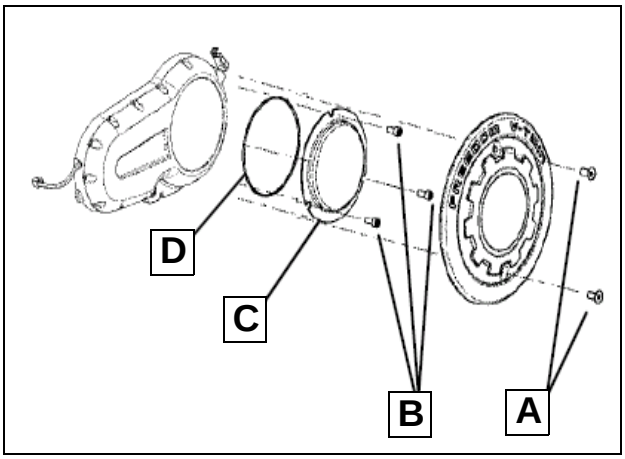

CAP PLATE & CAP PLATE SEAL INSTALLATION

1. Install new O-ring (D).
2. Install cover (C).
3. Torque screws (B) to 5.6 Nm (50 in.-lb.).
4. Install cap plate with screws (A) and torque to 1.7 Nm (15 in.-lb.).

CLUTCH PINION SHAFT REMOVAL

1. Protect finish of pinion shaft (E). Use an adjustable wrench to rotate arm toward clutch slave cylinder and remove slave cylinder pull rod pinion shaft.

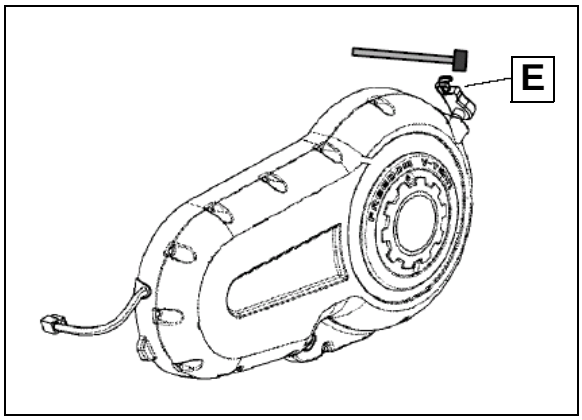

2. Remove primary cover cap plate, cover plate, and O-ring (page 9.9).
3. Remove dog point screw (F).
4. Pull clutch pinion shaft out of primary cover.

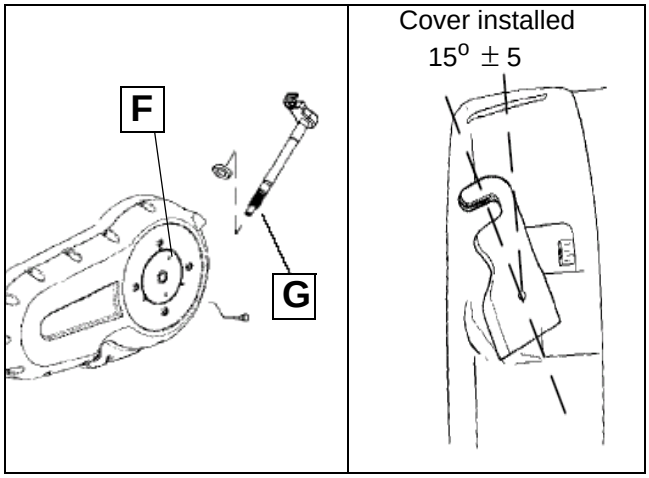

5. Inspect pinion shaft gear teeth (G) for cracks, broken teeth, or wear.

CLUTCH PINION SHAFT BEARING INSPECTION

1. Apply engine oil to the bearings.
2. Temporarily install pinion shaft into primary cover.
3. Turn shaft by hand. Replace bearings that feel rough, notched, or loose.

© 2009 Polaris Sales Inc.

CLUTCH PINION SHAFT SEAL REMOVAL & INSTALLATION

1. Remove clutch pinion shaft (page 9.9).

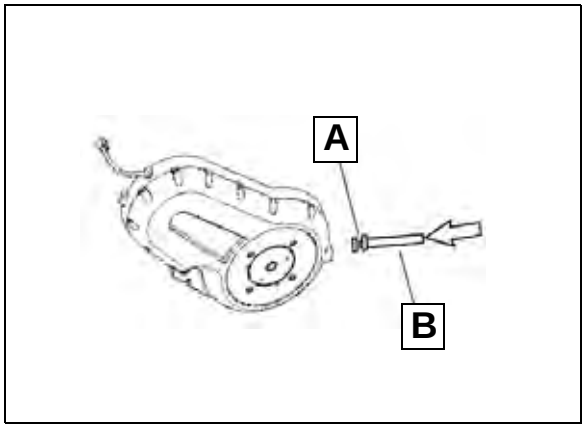

2. Carefully pry seal (A) out of primary cover.
3. Lubricate outer edge of new seal with engine oil and sealing lip with grease.
4. Drive seal into place with a suitable driver (B).

CLUTCH PINION SHAFT INSTALLATION

1. Lubricate and install clutch pinion shaft. Rotate release rack with screwdriver until flat side of rack is UP and rack teeth align with teeth of pinion shaft.
2. Push pinion shaft into cover until seated.

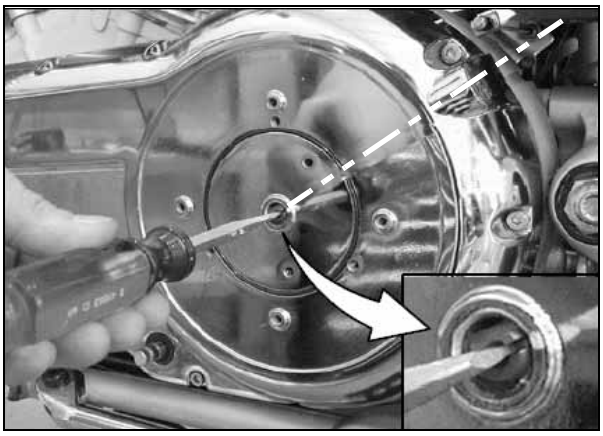

3. Push lightly inward by hand on the clutch arm until it stops. The arm must be positioned at a $15^{o}\pm5^{o}$ angle to primary cover parting line when it stops. If angle is not correct, lift arm, rotate as needed, and re-install until angle is correct.
4. Install dog-point screw (C) to 4.5 Nm (40 lb-in).

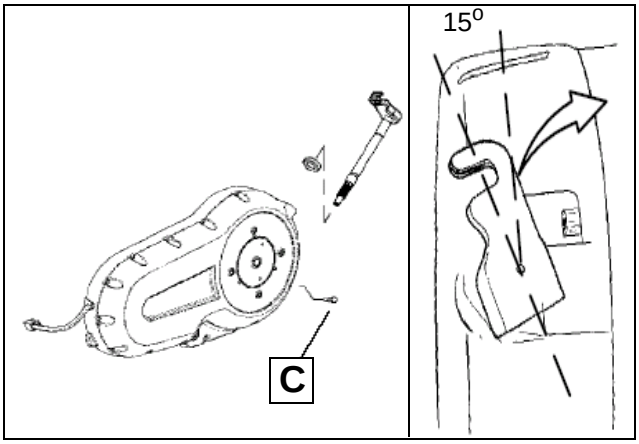

© 2009 Polaris Sales Inc.

PRIMARY COVER REMOVAL

1. Refer to exploded view on page 9.7.

2. Remove shift linkage and footrest as an assembly (page 9.6). Note dots on arm and shaft must be aligned for assembly

Pull Rod / Cable Removal From Release Arm

3. Protect finish of pinion shaft release arm and use an adjustable wrench to rotate arm toward primary cover.

4. Remove pull rod or cable end from release arm. Do not bend pull rod or kink cable.

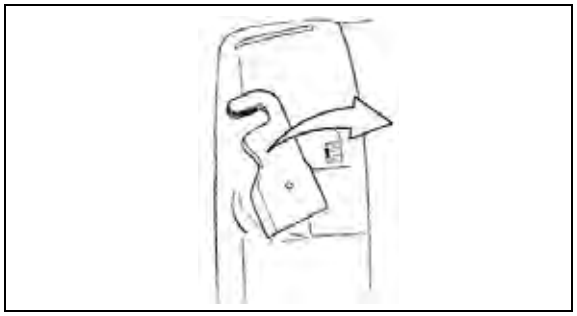

5. Remove cap plate and cap plate seal (page 9.9).

6. Remove clutch pinion shaft (page 9.9).

NOTE: Pinion shaft removal is not required for primary cover removal unless pinion shaft service is required.

7. Drain engine oil into suitable container.

NOTE: Primary cover can be removed without draining engine oil by safely leaning and supporting motorcycle at an angle to the right.

8. Remove primary cover screws.

NOTE: Note position of shorter screw (A) in the hole just to the rear of the shift shaft.

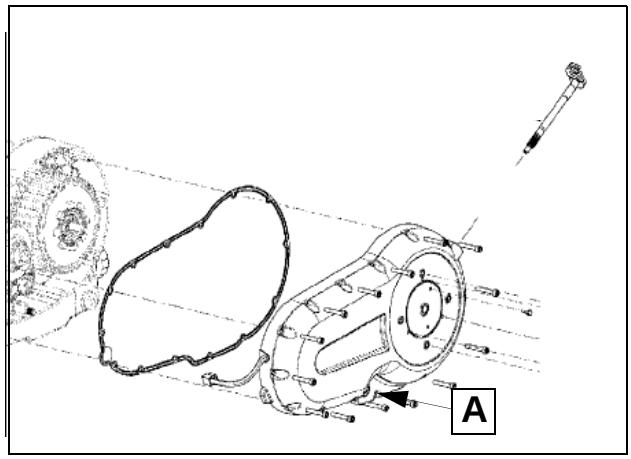

9. Tap cover with a soft face hammer to loosen.

10. Pull primary cover outward evenly at front and rear of cover to remove.

© 2009 Polaris Sales Inc.

SHIFT RATCHET REMOVAL & INSPECTION

1. Shift transmission into neutral.

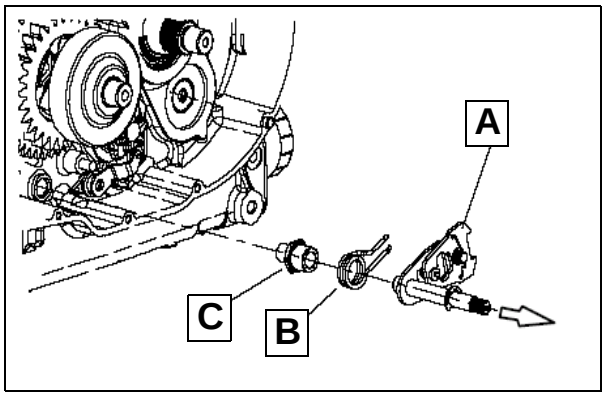

2. Remove primary cover (page 9.11).

3. Pull straight outward on shaft to remove the shift ratchet assembly (A) with return spring (B) attached.

4. Inspect shift shaft adapter (C) on crankcase for wear and verify it is tight.

5. Inspect shift shaft return spring for cracks or loss of tension. The spring should have enough tension to keep the shift shaft centered.

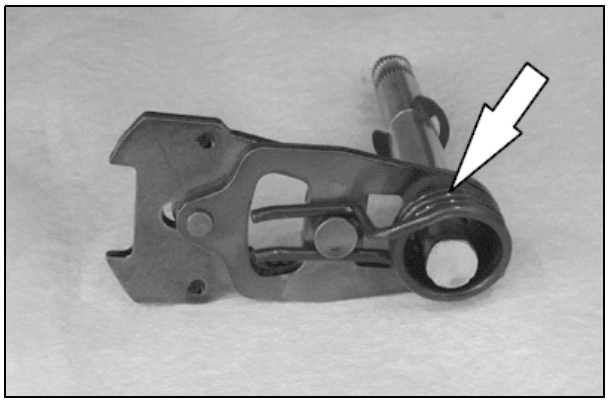

6. Inspect shift shaft for wear or damage.

7. Inspect compression spring (D) for tension. The spring should apply enough tension on the shift ratchet mechanism to keep it extended.

8. Inspect fit of rivet (E) on shift ratchet assembly. It should allow for free movement, but not be excessively loose.

9. Inspect fit of locating retainer clip (F) and all parts of ratchet for cracks or damage.

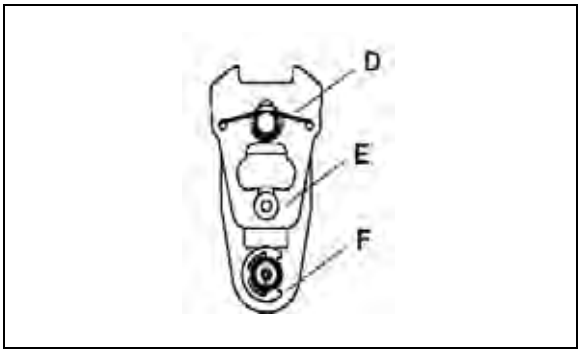

10. Inspect cases around shift shaft adapter for cracks.

11. Use a pin punch to hold detent roller away and remove shift star (G) from shift drum.

12. Inspect shift star.

13. Inspect detent roller arm (H) for wear or damage.

14. Inspect spring (I) for proper tension.

15. Remove detent roller arm and spring.

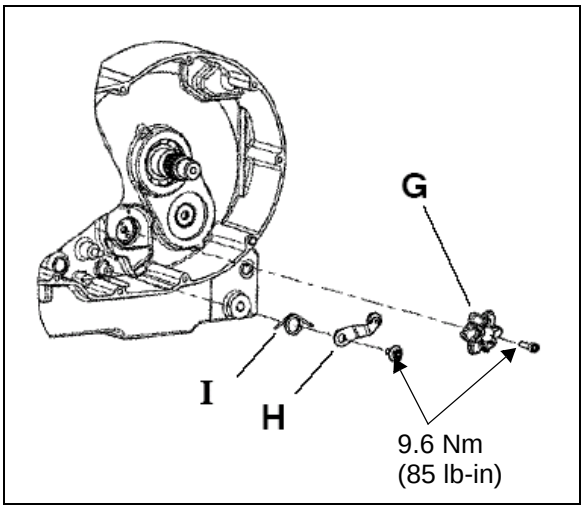

© 2009 Polaris Sales Inc.

SHIFT RATCHET INSTALLATION

Refer to Shift Mechanism Assembly View on page 9.8.

1. Apply Loctite 242 (Blue) to clean threads of detent roller screw. Install detent roller arm (A) with spring and torque screw to 9.6 Nm (85 lb-in).
2. Be sure balance gear oiler pin (B) is tight in crankcase.
3. Torque shift shaft adapter (C) and apply a small amount of lithium grease to shift shaft bore.
4. Clean threads of shift star screw with Loctite Primer N and apply a few drops of Loctite 242 (Blue) to threads.
5. Hold detent roller away with a pin punch and install shift star. Torque screw to 9.6 Nm (85 lb-in).

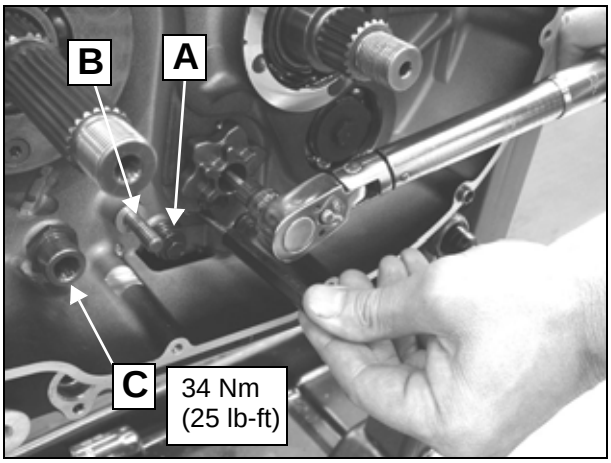

6. Install shift ratchet into shift shaft adapter with centering spring (D) attached. Slide ratchet fork (E) away from shift star and hold. Center the legs of ratchet return spring on pin and push ratchet in until seated.

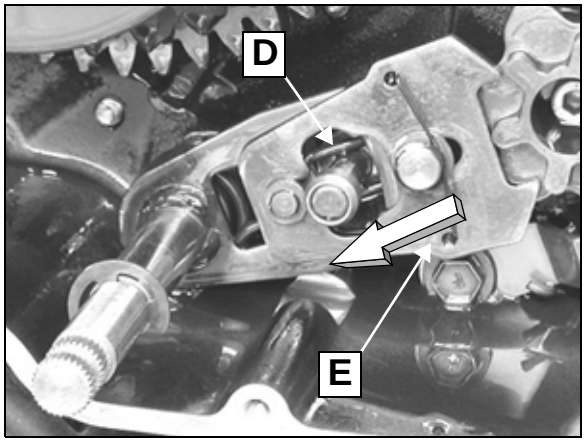

7. Release ratchet fork to engage ratchet with shift star.
8. Install clutch (page 9.22).

SHIFT SHAFT BEARING & SEAL REPLACEMENT

1. Remove primary cover (page 9.11). Carefully pry shift shaft seal from cover.

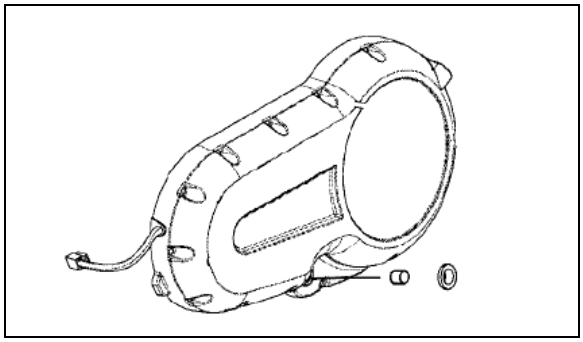

2. Using a suitable arbor and arbor press, press bearing from inside of cover to outside.
3. Apply assembly lube to inner & outer surfaces of new bearing.

Moly assembly paste PN: 2871460

4. Press bearing into place with numbered side out until fully seated.

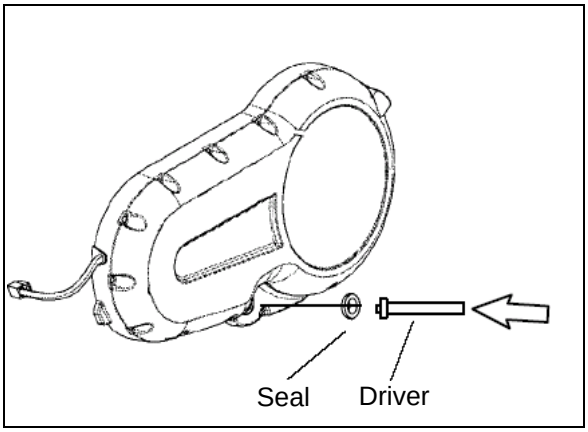

5. Apply a small amount of grease to lip of seal and apply engine oil to outside of seal.
6. Drive seal into place with a seal driver slightly smaller than the O.D. of seal.
7. Install primary cover (page 9.14).
8. After installing primary cover, be sure shift shaft returns freely to the centered position after rotating up or down.

© 2009 Polaris Sales Inc.

PRIMARY COVER INSTALLATION

1. Clean gasket surfaces of crankcases and cover.
2. Verify alignment pins (A) are in position and pinion shaft is removed from cover.
3. Place new primary cover gasket on crankcase with sealant bead (B) out (toward cover). Loctite® 534 can be used to hold gasket in place.

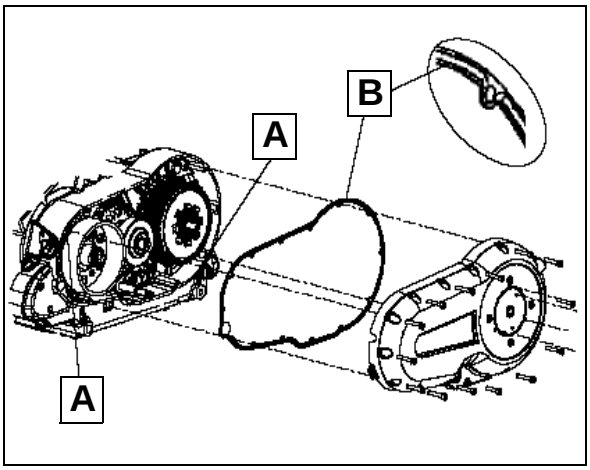

4. Install cover keeping it parallel to crankcase to prevent binding on shift shaft.

> **⚠ CAUTION**
>
> The rotor magnets have considerable energy. DO NOT place fingers between primary cover gasket surface and other parts or they may be pinched.

5. Install primary cover screws.

NOTE: Short screw (C) is placed in hole just behind shift shaft.

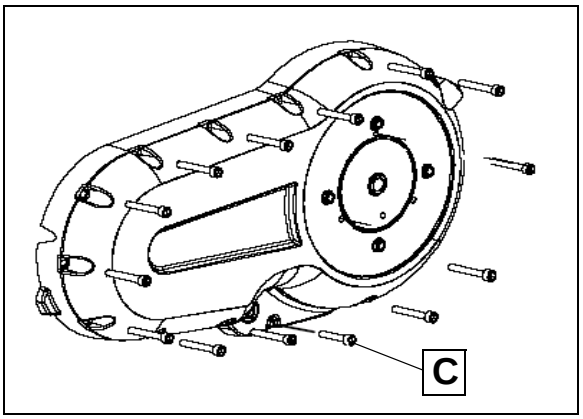

6. Torque screws in two steps to 13 Nm (115 lb-in). Repeat torque on all screws.
7. Install pinion shaft (page 9.10).
8. Install cap plate with seal (page 9.9).
9. Install slave cylinder pull rod on pinion shaft arm.
10. Lubricate clutch lever (page 2.11).
11. Install shift linkage arm on shift shaft with dots aligned and install left footrest assembly. Torque linkage arm pinch bolt to 9.5 Nm (84 lb-in).

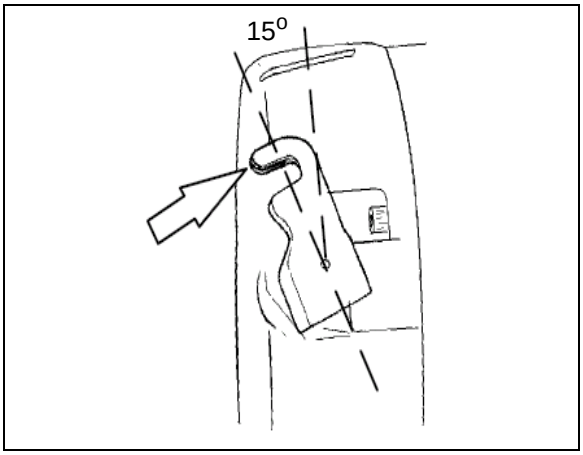

12. Check engine oil and fill to proper level (Chapter 2).

LOCKING THE CRANKSHAFT

Service procedures described in this chapter require locking of the gears or shafts to prevent rotation while removing or installing the retaining nuts. Engine Lock Tool PV-43502-A is described in most procedures; however, in some cases it is preferable to lock the engine crankshaft (shown below) or the clutch shaft using tool PV-45028.

- Remove RH lower engine cover.
- Remove crankshaft position timing wheel.
- Rotate engine to front or rear cylinder TDC with tool PV-48736 until 8mm (5/16 inch) pin punch can be inserted into the crankshaft TDC location hole.

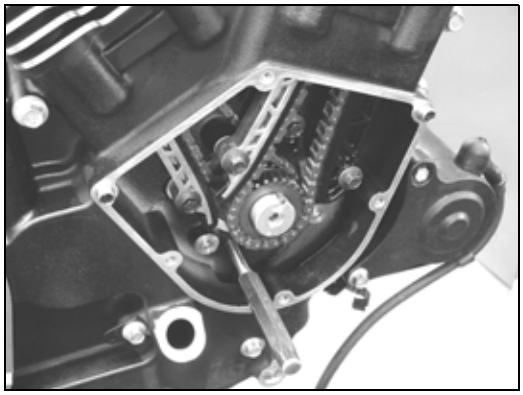

© 2009 Polaris Sales Inc.

CLUTCH SERVICE

CLUTCH ASSEMBLY VIEW & TORQUE

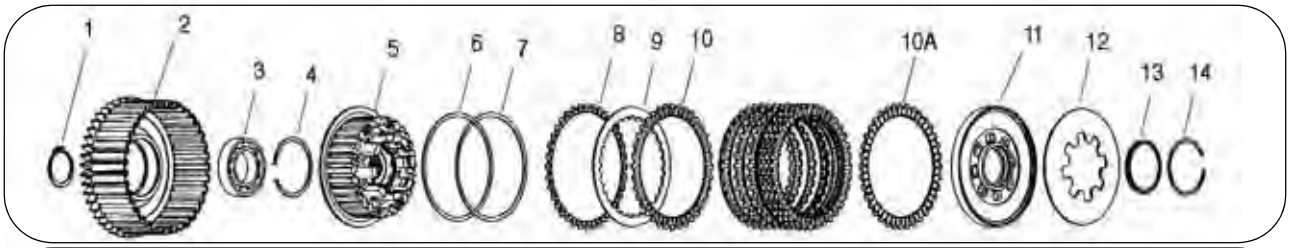

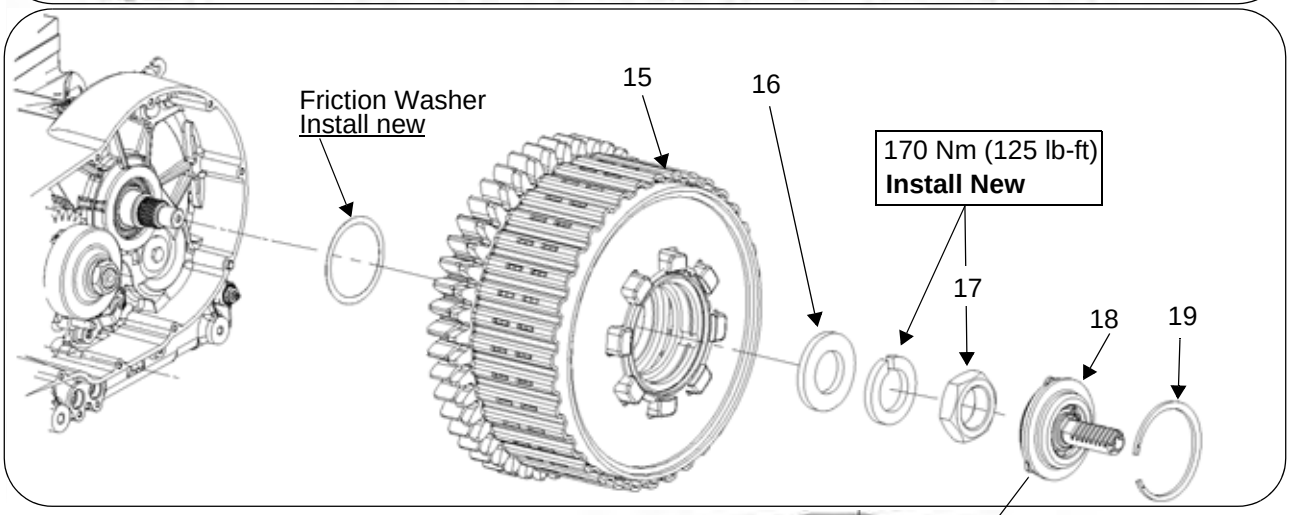

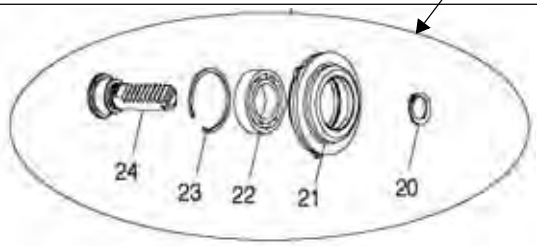

1. Clip, External
2. Asm., Gear/Basket
3. Bearing, Ball
4. Snap Ring, Internal
5. Hub, Clutch
6. Seat, Judder Spring
7. Spring, Diaphragm, Judder
8. Plate, Friction, Judder (1)
9. Plate, Separator (9)
10. Plate, Friction (8)
10A Plate, Friction, Special Outer (1)
11. Plate, Pressure
12. Spring, Clutch, Diaphragm
13. Seat, Snap Ring
14. Snap Ring, Internal
15. Asm., Clutch
16. Washer
17. Nut, 20x1.5
18. Asm, Rack Insert (Incl 22,23,24)
19. Circlip, Internal
20. Ring, Retaining, External
21. Insert, Pressure Plate
22. Bearing, Ball
23. Snap Ring, Internal
24. Rack, Clutch

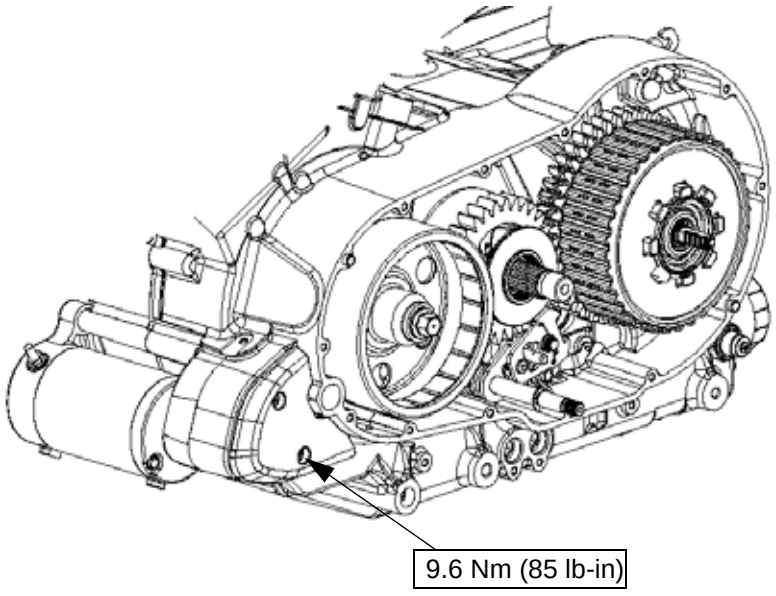

© 2009 Polaris Sales Inc.

CLUTCH REMOVAL

1. Remove primary cover (page 9.11).
2. Using an internal snap ring pliers, remove clutch rack.

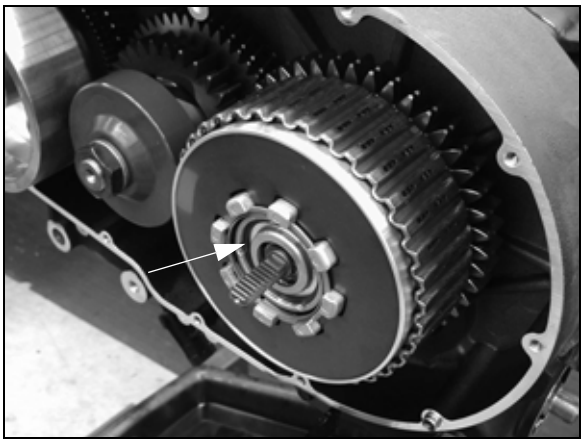

3. Install engine lock tool (A) between crankcase and split gear as shown below to prevent gear rotation and loosen clutch nut (rotor / starter gear removal is not required).

NOTE: An alternate method of preventing gear rotation is to lock the crankshaft as shown on page 9.14.

Special tool: Engine lock tool PV-43502-A

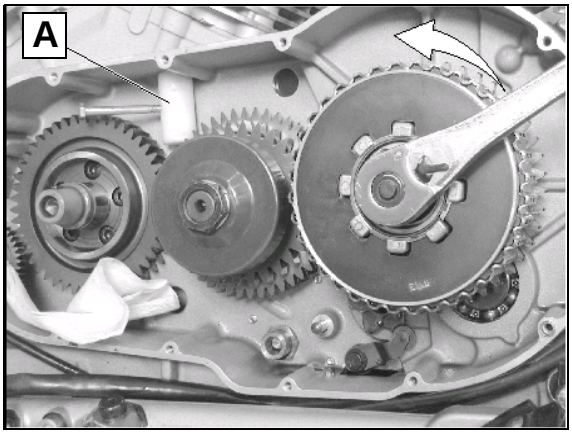

⚠ CAUTION

Use caution when removing nut and keep hands and body clear in case tool slips off gears.

4. Remove clutch nut, lock washer, and flat washer. Discard lock washer and nut.

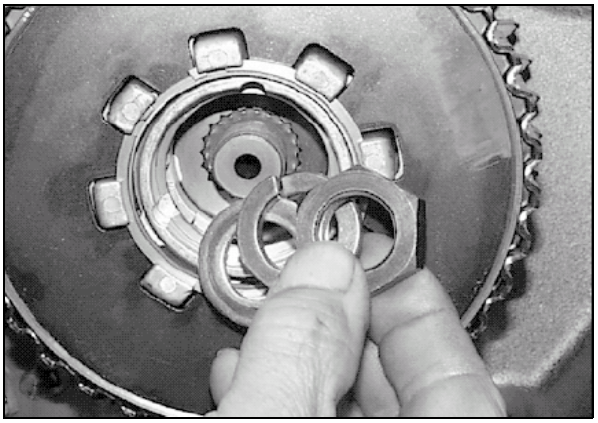

5. Remove clutch assembly from clutch shaft.
6. Remove friction washer (B) from clutch shaft (2010) and discard. A new washer must be installed upon assembly.

NOTE: 2010 models were equipped with this washer. Installation of the washer is recommended for 2008 / 2009 models upon assembly.

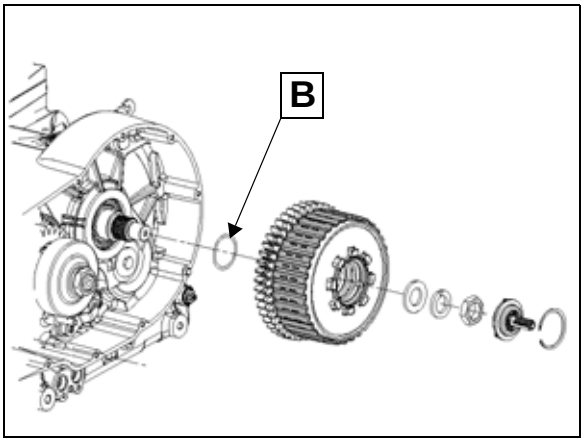

© 2009 Polaris Sales Inc.

CLUTCH DISASSEMBLY

Special tool: Clutch spring compressor PV-45032

> ⚠ CAUTION
>
> Clutch is under spring pressure. WEAR EYE PROTECTION.

1. Install clutch spring compressor threaded rod and secure it with the snap ring (A).

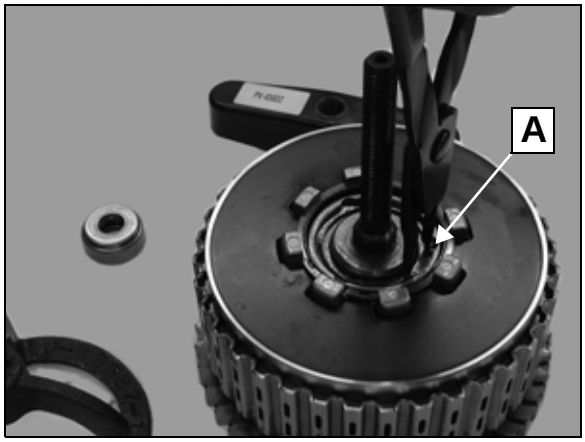

2. Install compressor bridge, bearing, and T-handle over threaded post.

3. Compress clutch spring and remove snap ring.

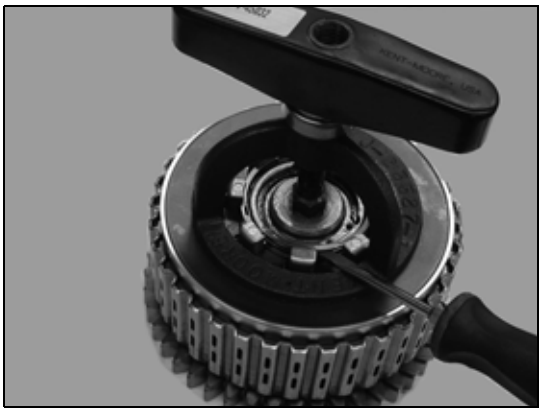

4. Remove retaining ring seat (B) (stepped washer).

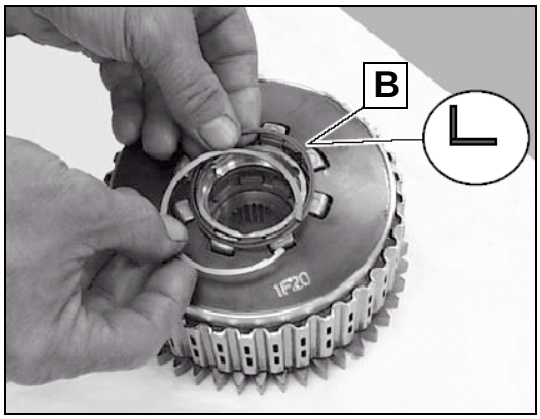

5. Remove tool from clutch.

6. Refer to exploded view on page 9.15.

7. Disassemble clutch, laying parts out in order of removal and keep them in order.

8. Remove clutch spring (C) and pressure plate (D).

9. Remove (1) special friction plate (E) that is placed outermost against pressure plate.

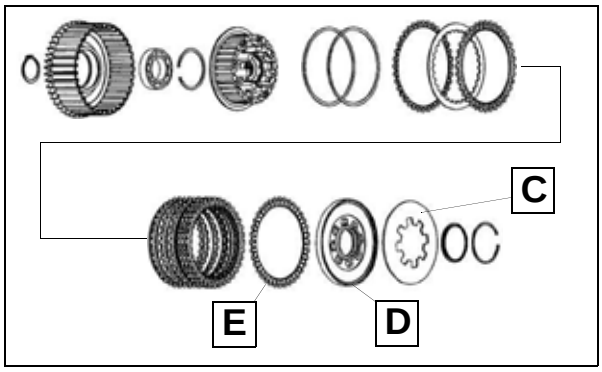

10. The outermost plate can be identified by the wider pads on the friction material.

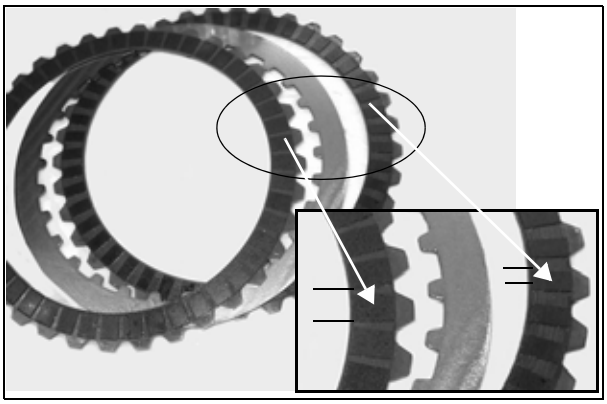

© 2009 Polaris Sales Inc.

11. Remove (9) identical steel plates that separate the (8) identical friction plates.

12. Remove judder friction plate, judder spring, and judder spring seat.

13. Note difference between judder plate (F) and next friction plate (G). The judder plate is the innermost friction plate on the clutch hub.

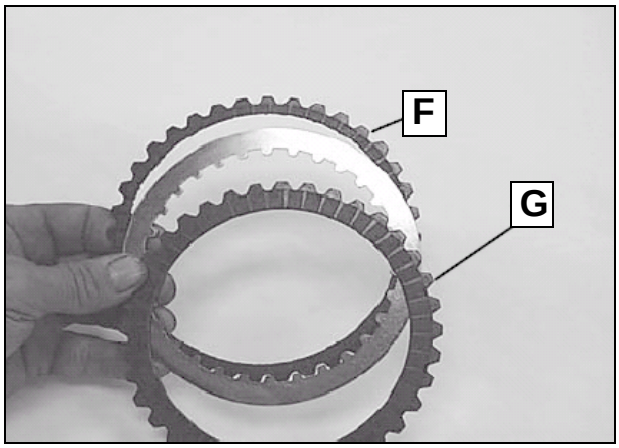

CLUTCH INSPECTION

1. Clean clutch plates, inner hub, and outer basket.

Clutch Basket

2. Inspect clutch gear teeth (A) for wear, cracks or damage.

3. Inspect inside surfaces (B) of basket for cracks or wear (grooves) from clutch plates.

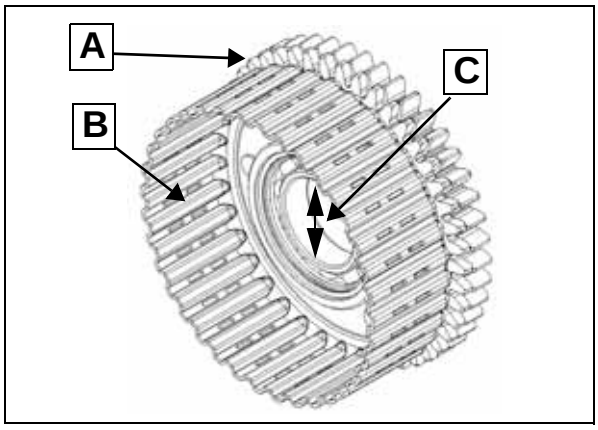

4. Replace parts that fail inspection

5. Rotate hub bearing. Check for smooth rotation. Inner race should no detectable radial movement (C).

6. Lubricate bearing with engine oil.

Clutch Hub

7. Inspect spline teeth (D) for wear, cracks or damage.

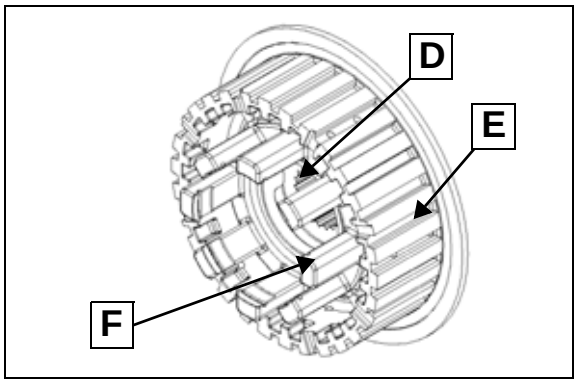

8. Inspect surface of steel plate guides (E) on outer edge of hub for wear, grooves, or damage. Check all posts (F) for cracks or damage. Check the snap ring groove for wear.

9. Visually inspect friction and steel plates for wear or damage on both surfaces. Replace plates as a set if any plate is worn or damaged.

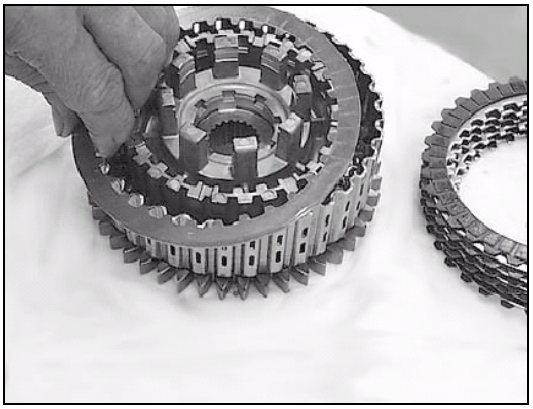

© 2009 Polaris Sales Inc.

10. Replace steel plates if grooved, distorted or discolored. Inspect plates for distortion by placing each plate on a precision flat surface. Insert a feeler gauge (G) between plate and flat surface in several places.

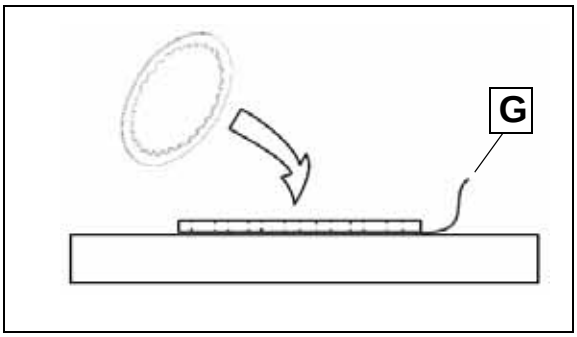

Clutch Steel Plate Warp Service Limit: .20mm (.008in)

11. Measure thickness of friction plates in several places. Thickness should be the same at each place. Replace plates that fail inspection.

Friction Plate Thickness Minimum): 2.00 mm (.078 in)

Clutch Pressure Plate

12. Inspect pressure plate for cracks, scoring, or wear on friction surface.

13. Inspect lifter retaining ring groove (H) for cracks or chips. Replace pressure plate if it fails inspection.

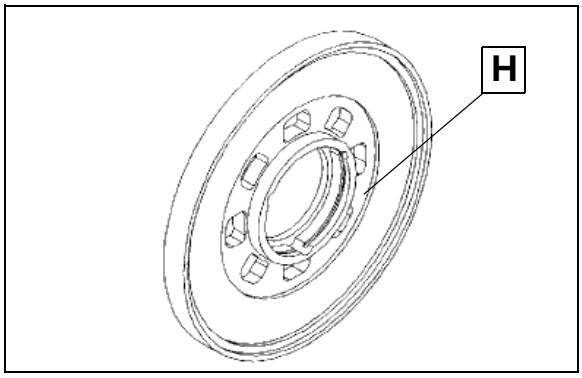

Diaphragm Spring

14. Inspect clutch diaphragm spring (I) for cracks or distortion.

15. Inspect inner and outer edges of spring carefully for unusual wear or damage. Outer edge should lay flat against a surface plate and inner tabs should be even in height (J).

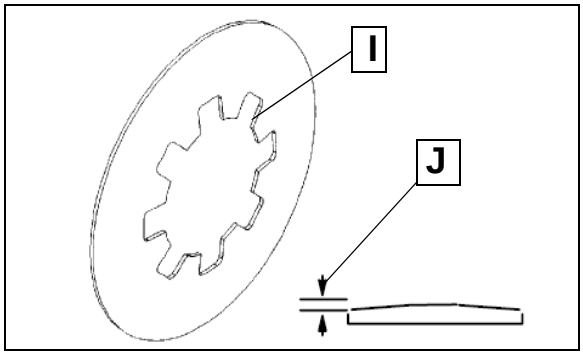

Clutch Release Rack and Bearing

16. Inspect clutch rack for broken or damaged teeth.

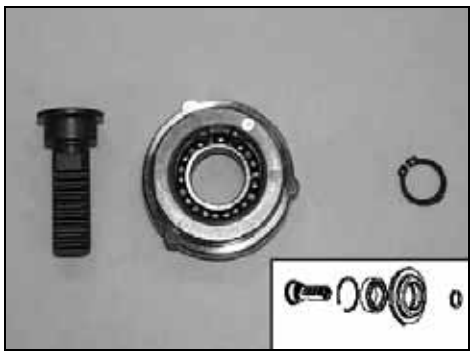

17. Remove retaining ring and disassemble.

18. Inspect lifter bearing visually for any signs or wear or discoloration. Rotate bearing inner race with your finger and check for smooth movement and no play.

© 2009 Polaris Sales Inc.

19. If bearing (K) fails inspection, remove it from housing (L) using an arbor press. Support housing evenly in areas (M) during bearing removal.

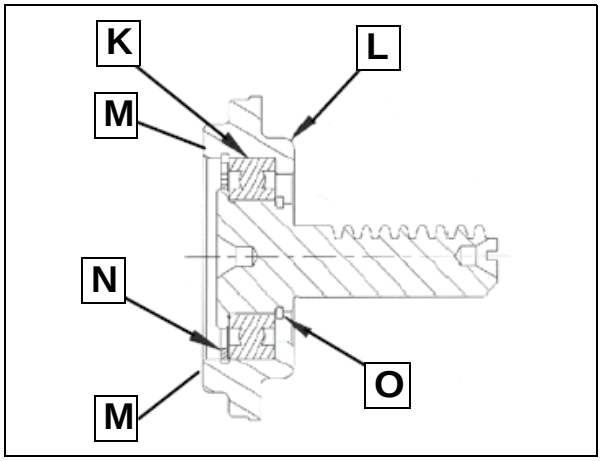

20. Press new bearing into housing until seated and past snap ring groove (N). Press only on outer race of bearing.

21. Install rack into bearing as shown.

22. Install retaining ring (O) with sharp (machined) edge away from bearing (toward rack teeth). Be sure it is fully seated.

CLUTCH ASSEMBLY

1. Refer to exploded views on page 9.15. Apply engine oil to judder spring seat (A) and spring (B).

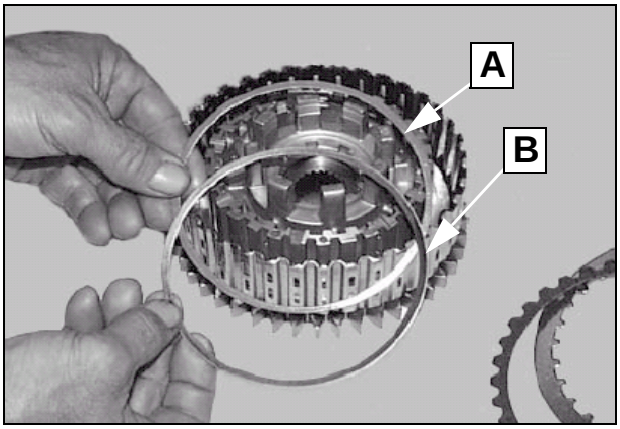

2. Install judder spring seat (flat ring), then judder spring.

NOTE: Judder spring must be installed with concave side facing UP (toward outside of clutch). The tallest edge of spring will be outermost.

3. Apply engine oil to judder friction plate and install.

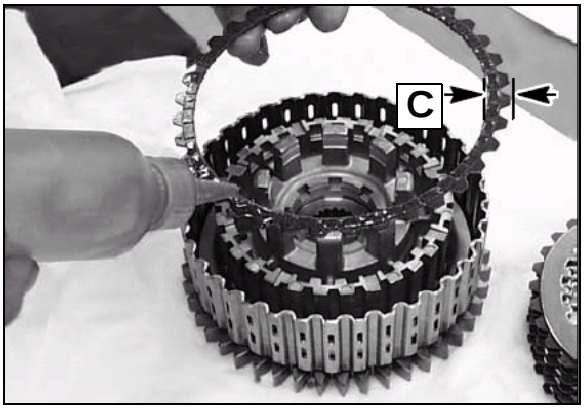

NOTE: This plate has a thinner profile (C) than the rest of the friction plates.

© 2009 Polaris Sales Inc.

NOTE: Feel the edge of steel plates and friction plates with your finger. One side of plate is machined at the edges and the other side is a rolled edge (rounded). Install steel plates with **machined edge facing UP**. Install friction plates with **rolled edge facing UP**.

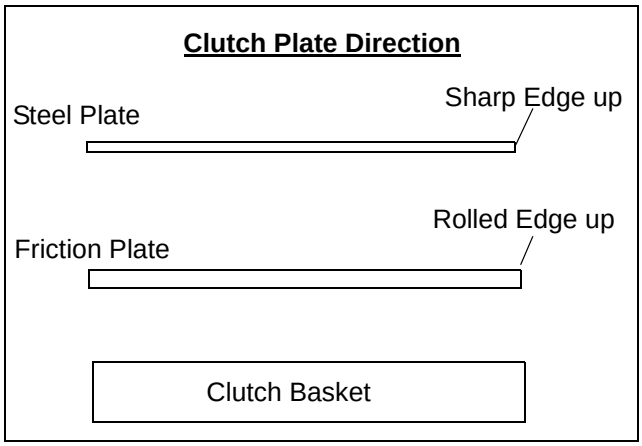

4. Place an oiled steel plate into clutch basket with machined edge UP.

NOTE: If friction plates are new, soak them in clean engine oil for a few minutes before installing.

5. Continue stacking oiled clutch plates into clutch basket alternating friction and steel plates until all are installed, ending with the special friction plate.

NOTE: Be sure to install special friction plate last (against pressure plate). As noted in Disassembly, the friction material on this plate has wider pads than the other (8) common friction plates. See illustrations on page 9.15 and photo below.

6. Install clutch pressure plate on top of clutch packing.

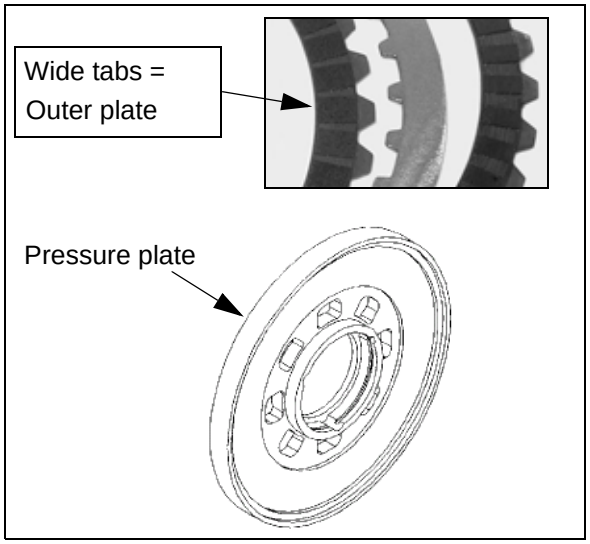

7. Install clutch diaphragm spring (D) with concave side down on top of pressure plate.

8. Place retaining ring seat (E) and retaining ring over clutch assembly before installing clutch spring compressor tool. Flange on inner edge of seat faces UP as shown.

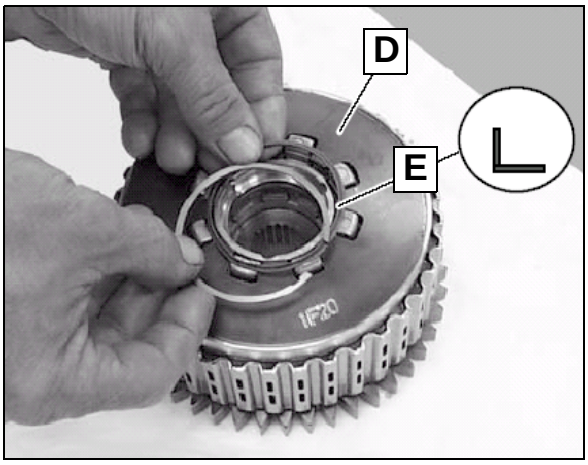

CAUTION

Tool will be under spring pressure.
WEAR EYE PROTECTION.

9. Install compressor tool and compress spring so ring seat can be positioned and retaining ring installed.

Special Tool: Clutch Spring Compressor PV-45032

10. Install retaining ring with machined (sharp) edge up. Position retaining ring so one end of retainer is located on one of the posts (F).

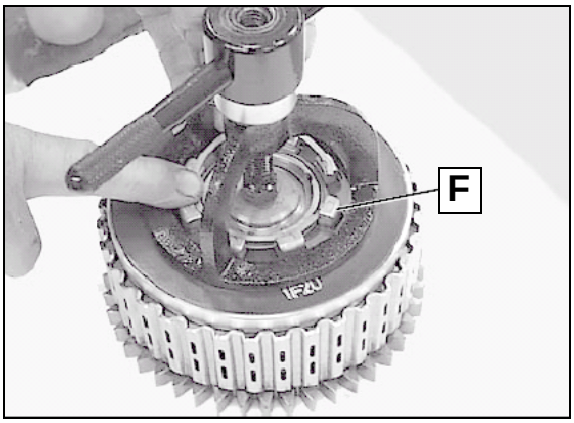

11. After retaining ring is installed, slowly release pressure from tool and guide flange into position under the retaining ring.

12. Remove spring compressor tool. Inspect retaining ring to be sure it is fully expanded and seated in groove.

© 2009 Polaris Sales Inc.

CLUTCH INSTALLATION

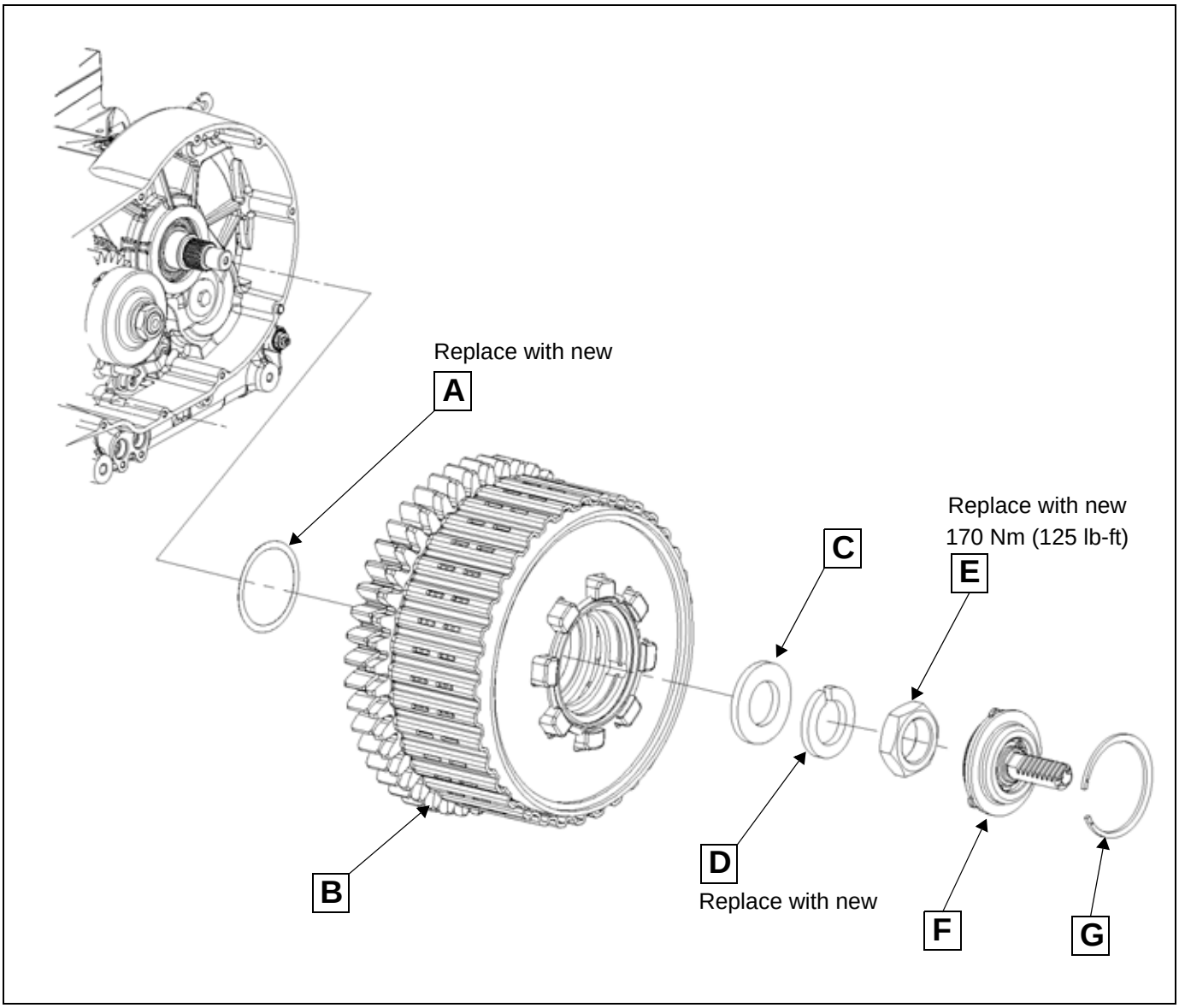

1. Install a **NEW friction washer** (A) on clutch shaft. DO NOT re-use this washer.

NOTE: This washer is installed on 2010 models and is recommended for installation on all 2008 and 2009 when clutch is removed for service.

2. Pry back split gear (B) to align teeth and push clutch assembly onto clutch shaft until gear is fully engaged with torque compensator gear.

3. Clean clutch shaft threads with Loctite™ Primer N to remove all grease, oil, or old locking agent.

4. Install washer (C), **a new lock washer (D) and a new nut (E).**

5. Install lock tool under split gear or lock crankshaft as shown on page 9.14. Torque nut to specification.

Engine lock tool PV-43502-A

6. Install clutch lifter assembly (F) and retaining ring (G). Be sure retaining ring is seated in groove.

7. Install primary cover (page 9.14).

8. Check engine oil and fill to proper level.

© 2009 Polaris Sales Inc.

PRIMARY DRIVE ASSEMBLY VIEW & TORQUE

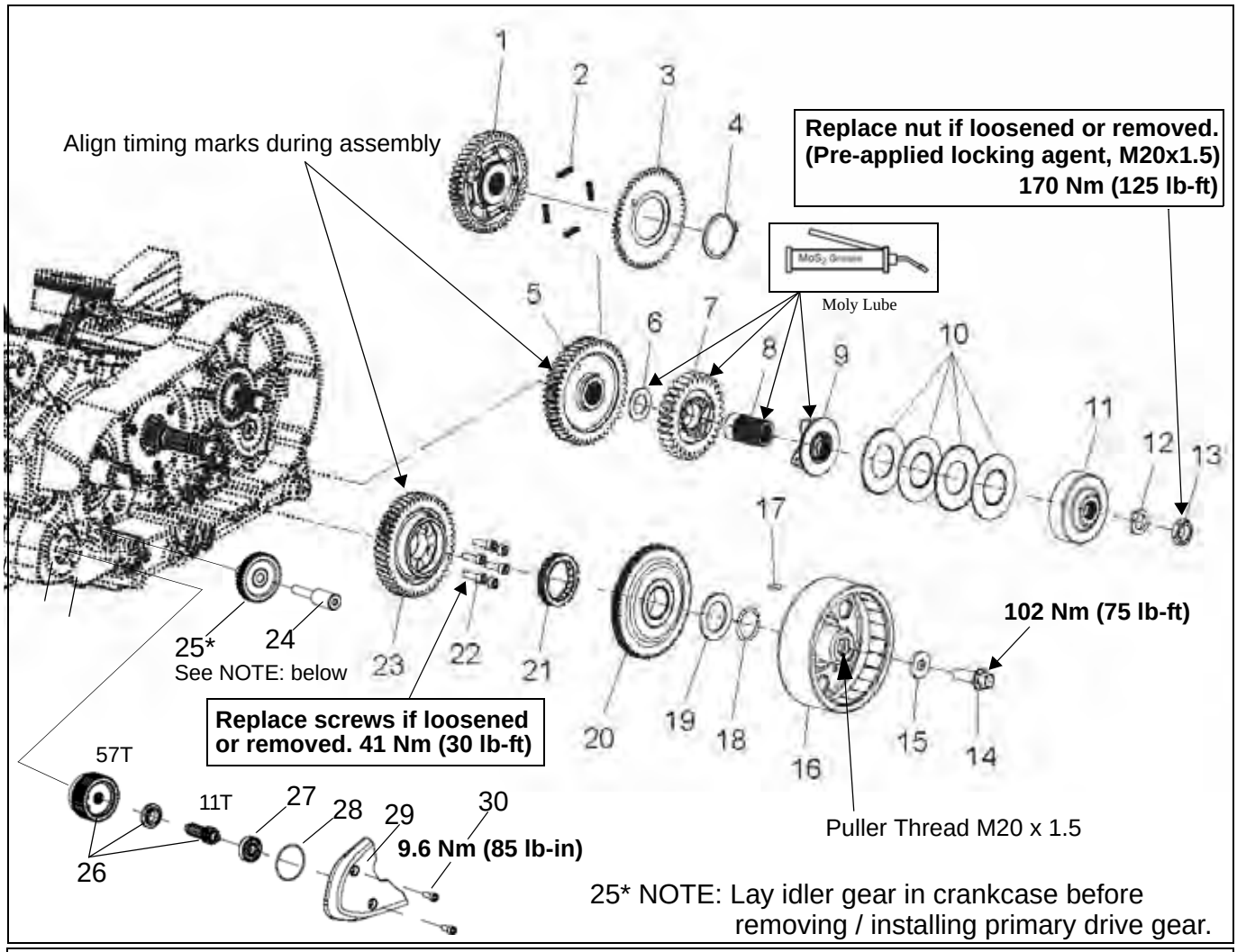

IMPORTANT: Torque compensator (items 6-13) must be assembled with engine upright to prevent dislocation of washer (item 6) from sleeve (item 8) when items 9-13 are installed. See procedure page 9.23.

1. Gear, Split, 37T
2. Spring, Split Gear (4)
3. Gear, Split, Backlash
4. Retaining Ring
5. Assembly, Split Gear (incl. items 1-4)
6. Thrust Washer, Compensator
7. Compensator Gear
8. Compensator Sleeve
9. Compensator Slider
10. Compensator Spring, Belleville (4)
11. Compensator Retainer
12. Lock Washer, Split
13. Nut, Special (Replace if removed or loosened)
14. Bolt, Oil Jet
15. Washer, Flat
16. Rotor
17. Key, Rotor
18. Retaining Ring
19. Flat Washer
20. Starter Drive Gear, Crankshaft
21. Starter Drive Clutch
22. Screw, Special (6) (Replace if removed or loosened)
23. Crankshaft Gear (Primary Drive Gear)
24. Shaft, Idler Gear
25. Idler Gear, Starter (See NOTE: #25 in illustration above)
26. Torque Limit Clutch, Starter
27. Bearing
28. O-Ring
29. Cover, Limit Clutch
30. Screw, Socket Head, M6 x 15

© 2009 Polaris Sales Inc.

TORQUE COMPENSATOR REMOVAL

See Torque Compensator Assembly View (page 9.23). If split gear removal is required, see page 9.27 after compensator is removed.

1. Remove primary cover (page 9.11).
2. Lock the engine to prevent rotation with the lock tool or lock the crankshaft as described on page 9.14.

Engine lock tool PV-43502-A

3. Remove torque compensator nut and lock washer and discard.
4. Remove retainer plate and Belleville springs. Note orientation of washers (concave edges of washers face each other) for installation.

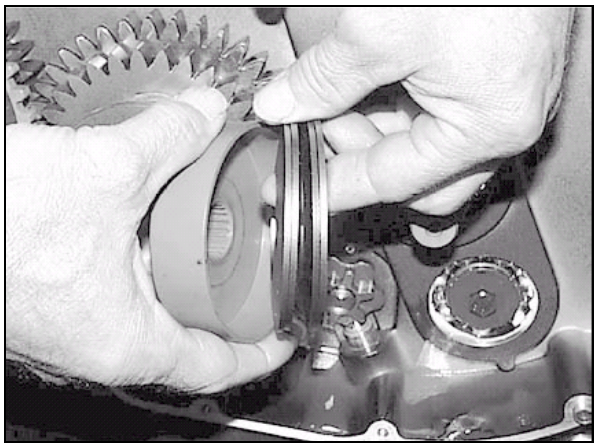

5. Remove outer ramp.

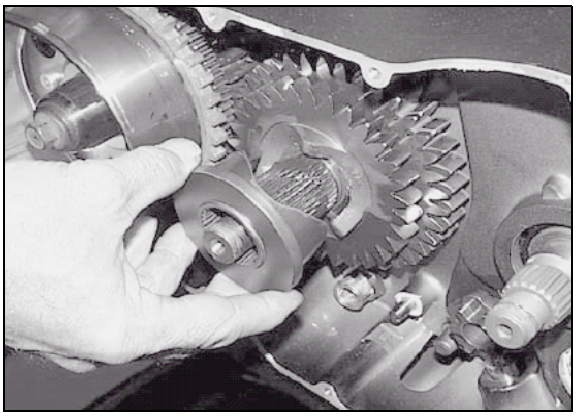

6. Remove gear (A) with compensator sleeve (B), and washer (C). The washer must be positioned correctly upon assembly. See assembly procedure page 9.25.

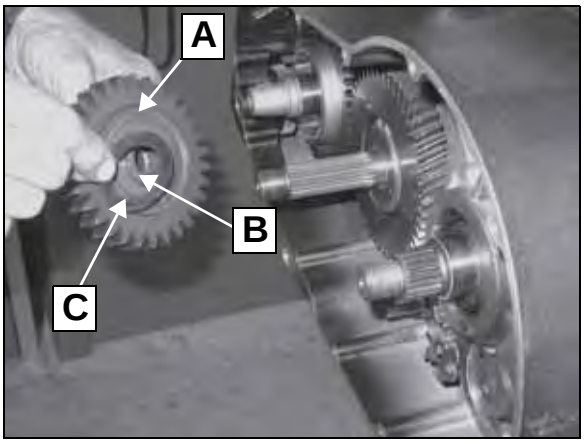

TORQUE COMPENSATOR INSPECTION

1. Inspect all parts for excessive galling or damage.

NOTE: Some polishing will be evident between the compensator gear and the compensator slider and is a normal condition. Replace assembly if ramps are worn.

2. Measure free length of torque compensator spring stack.

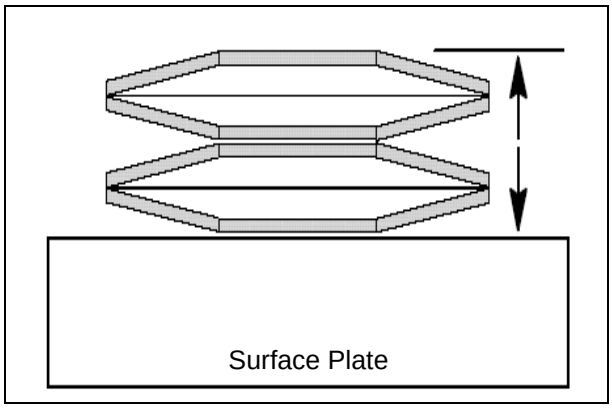

Specification: Compensator Spring Stack Height
Standard: 17.68-18.08mm (.696 - .712 inch)

Service Limit: 16mm (.630 inch)

© 2009 Polaris Sales Inc.

TORQUE COMPENSATOR INSTALLATION

NOTE: Engine must be upright for this procedure. It is very important that washer (A) does not fall off the sleeve (B) during assembly. Perform all steps to ensure washer is in place before installing springs and retainer plate.

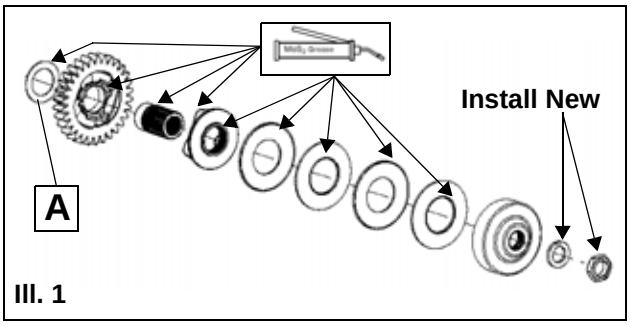

Ill. 1

1. Push split gear (B) fully inward to be sure it is seated.
2. Place sleeve (C) on balance shaft and hold it in against split gear.
3. Pull balance shaft (D) fully outward.
4. Measure and record the distance from sleeve to end of shaft.

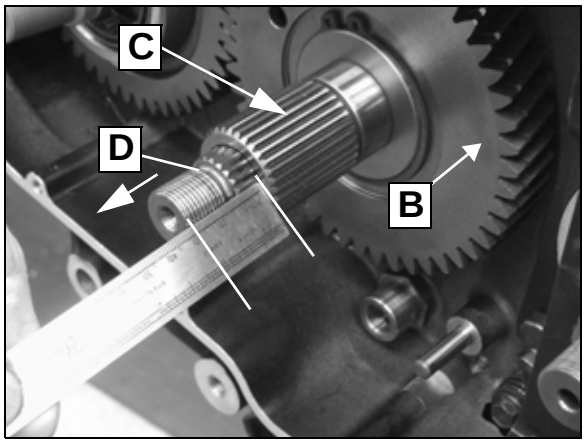

5. Remove sleeve from balance shaft.
6. Apply Moly Assembly Paste 2871460 shaft splines, sleeve, back side of gear, and washer.

Moly Assembly Paste: 2871460

7. Install sleeve (E) into gear and place washer (F) over the protruding end of the sleeve on back side of gear.

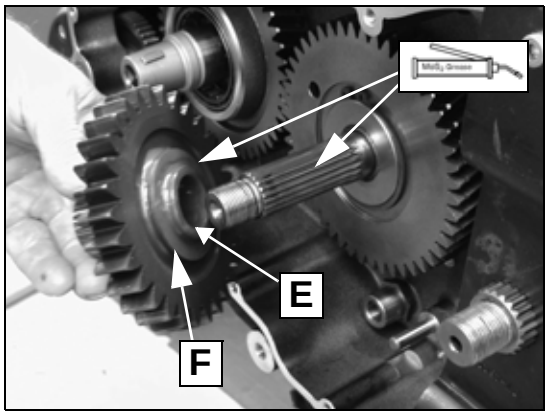

8. Slide assembly onto balance shaft and seat it firmly against split gear, using care not to dislodge the washer from the sleeve.
9. Grease the peaks and valleys gear, sliding ramp, and splines of sleeve.

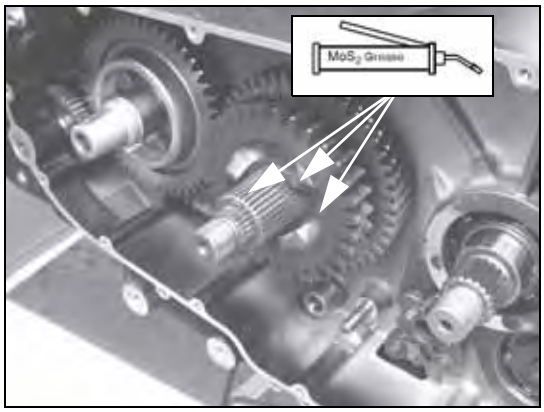

10. Install sliding ramp.

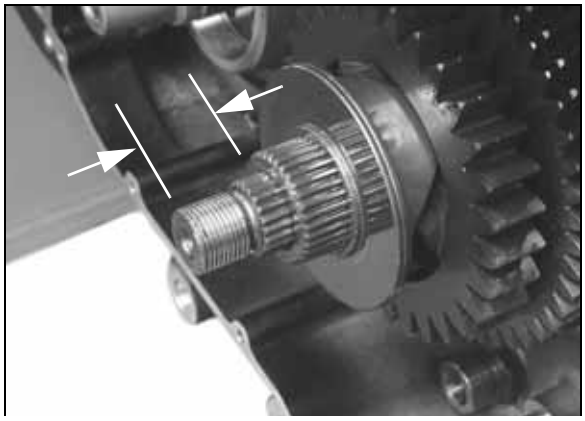

11. Repeat measurement, pushing sleeve inward and pulling shaft outward. Measurement should be the same as recorded in Step 4. Disassemble and inspect washer placement if measurement is not the same.

© 2009 Polaris Sales Inc.

12. Grease edges of springs and retainer plate. Illustration below shows correctly assembled springs, with concave edge facing each other. The assembled sets of two spring washers are stacked back to back.

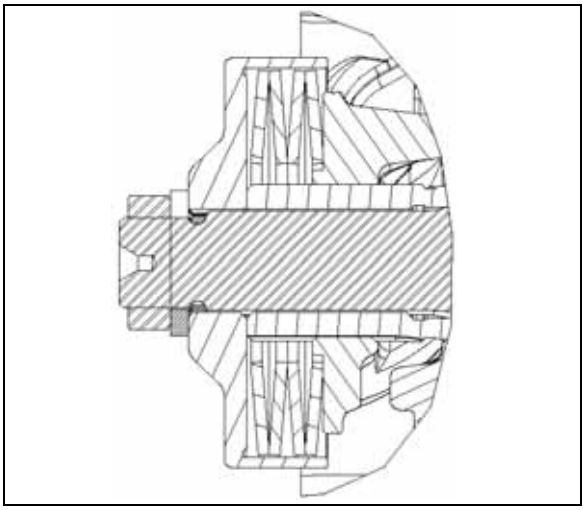

13. Install retainer plate and Belleville spring assembly, pushing it onto splines as far as possible.
14. **Clean balance shaft threads thoroughly** to remove all old locking agent, oil, or grease.
15. Install a new lock washer, and nut. The nut has a pre-applied locking agent.

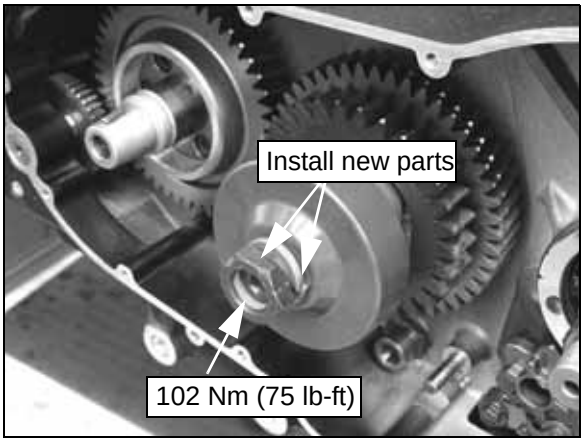

16. Hold shaft by inserting lock tool or pin the crankshaft.
17. Torque nut to 170 Nm (125 lb-ft.).

Engine Lock Tool PV-43502-A

TORQUE: Compensator Nut
170 Nm (125 lb-ft)

18. Install primary cover (refer to page 9.14).
19. Fill engine oil to proper level.

ROTOR (FLYWHEEL) REMOVAL

1. Remove primary cover (page 9.11) and rotor retaining bolt (counterclockwise). Lock the engine to prevent rotation with the lock tool (insert at point A) or lock the crankshaft as described on page 9.14.

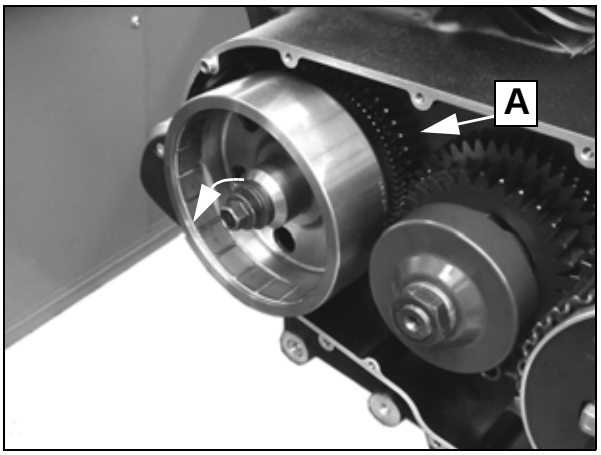

Engine lock tool PV-43502-A

CAUTION

Use caution when removing nut and keep hands and body clear in case tool slips off gear.

2. Remove lock tool.
3. Cover crankcase cavity under rotor with a clean shop towel to prevent parts from falling into case.

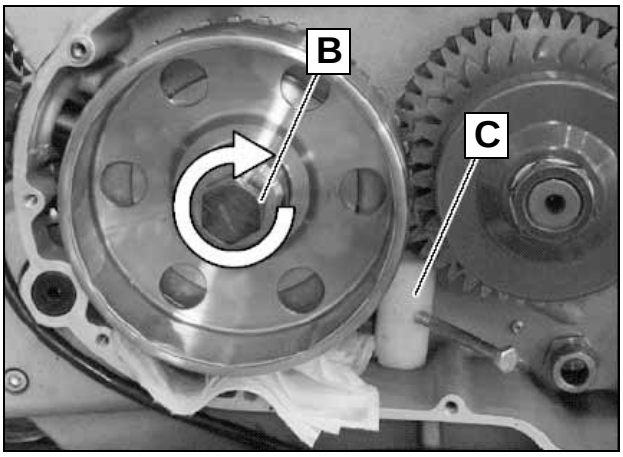

4. Install puller (B). Install lock tool (C) on bottom of gear and rotate puller clockwise to remove rotor.

Rotor Puller PV-43533

5. Remove rotor and key.

© 2009 Polaris Sales Inc.

ROTOR (FLYWHEEL) INSTALLATION

1. Clean taper of rotor and crankshaft thoroughly.
2. Install key in key way on crankshaft.
3. Align rotor key-way and install rotor on crankshaft.

Engine Lock Tool PV-43502-A

4. Position the lock tool as for rotor removal (C, previous photo) or lock the crankshaft as described on page 9.14.
5. Install washer & bolt. Torque to 102 Nm (75 lb-ft).

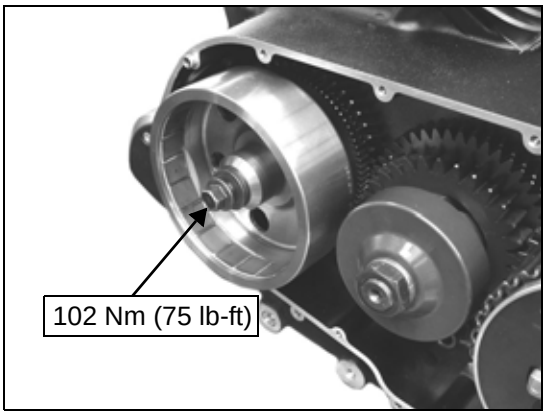

SPLIT GEAR REMOVAL

1. Remove primary cover (page 9.11).
2. Remove rotor (page 9.26).
3. Remove clutch assembly (page 9.16).
4. Remove torque compensator (page 9.24).
5. Remove starter gear retaining ring (A) with a flat-billed external ring pliers. Remove any burrs from crankshaft ring groove before removing starter gear, or starter gear bushing may be damaged when gear is removed.

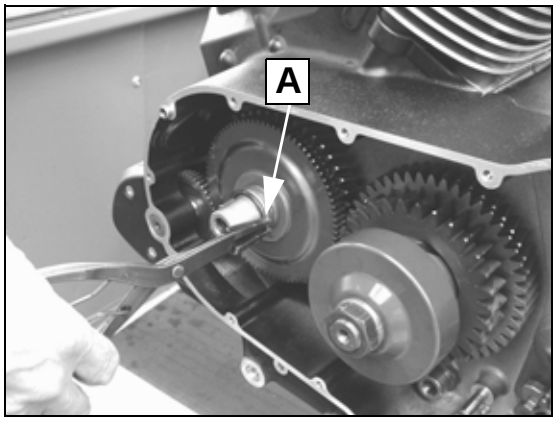

6. Remove torque compensator (page 9.24).
7. Temporarily install rotor to rotate engine until key is pointing up, and timing marks on split gear are aligned with mark on crankshaft gear.
8. Insert a 1/4” pin punch in gear alignment hole (B) to relieve spring pressure on gear teeth.

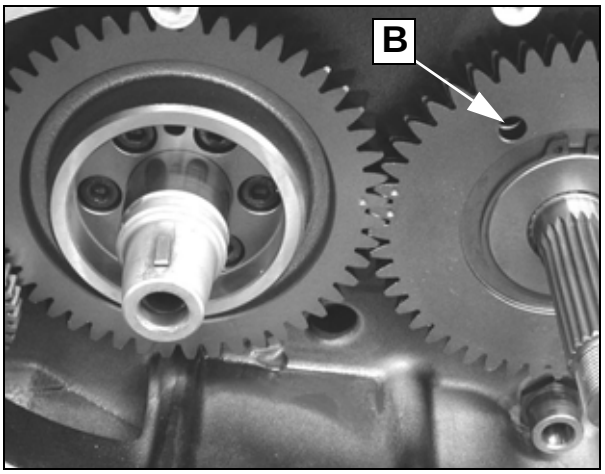

9. Pull split gear off balancer shaft.

SPLIT GEAR INSPECTION

1. Remove retaining ring (C) from split gear hub and separate outer gear from inner gear. Visually inspect contact surfaces of gears, springs, spring channels, and gear teeth.

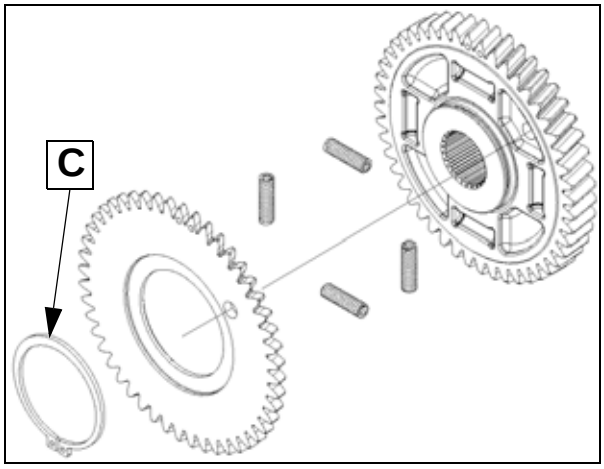

NOTE: Some normal polishing may be evident in the spring channels of gears. Replace the gear assembly if wear is evident.

2. After assembly, outer gear must rotate and return freely without binding on inner gear.

© 2009 Polaris Sales Inc.

SPLIT GEAR INSTALLATION

1. Rotate balance shaft until “boss” spline (D) (double wide spline) is at 12:00 o’clock position.

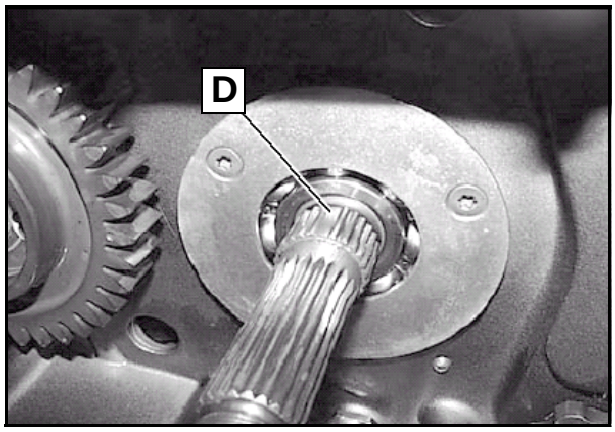

2. Apply grease to balance shaft and back of split gear assembly.
3. Line up teeth of split gear assembly with 1/4" straight pin in hole (E). Leave pin in place.
4. Do not allow pin to protrude out the back of the split gear assembly.

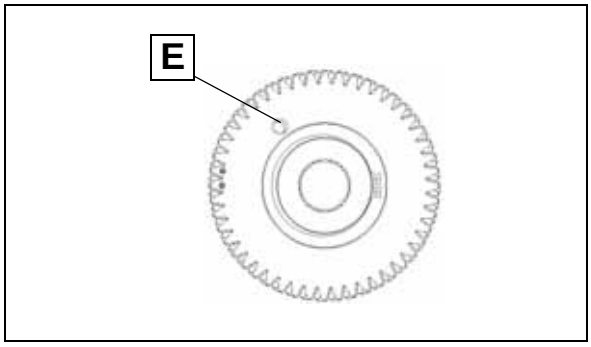

5. Place split gear on balance shaft with alignment dots at the 9:00 o’clock position.
6. Align “boss” splines of balance shaft and split gear while engaging crankshaft gear with split gear. Dot on crankshaft gear (F) must be between the 2 dots on balance gear (G).

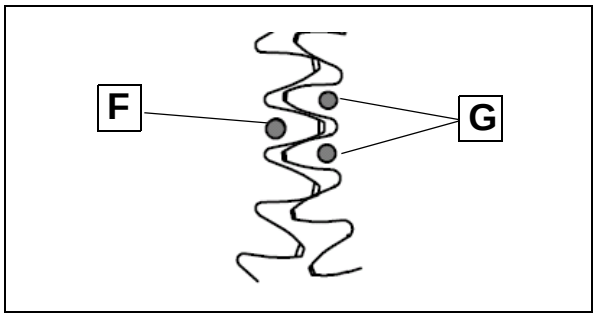

7. Push split gear inward until fully seated and flush with crankshaft gear. Verify proper balance shaft timing.

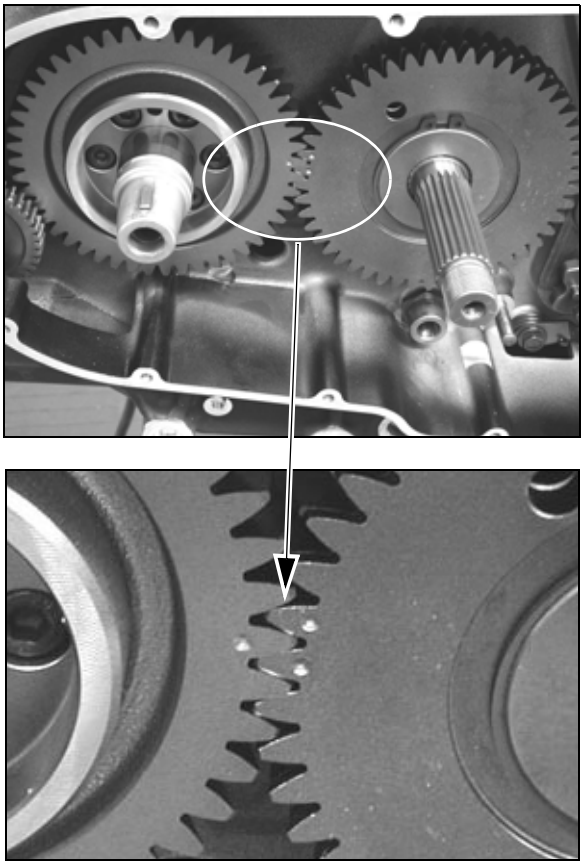

8. Install torque compensator (page 9.25), starter gear (page 9.32), rotor (page 9.27), clutch (page 9.22), and primary cover (page 9.14).

© 2009 Polaris Sales Inc.

STARTER DRIVE

STARTER DRIVE REMOVAL

NOTE: The starter gear and primary drive (crankshaft) gear must be removed before the starter idler gear or starter torque limiter clutch and shaft can be removed from crankcase.

1. Remove primary cover (page 9.11).
2. Remove rotor (page 9.26).

Rotor Puller PV-43534

3. Place a shop towel in the crankcase cavity.
4. Remove starter gear retaining ring (A) with a flat- billed external ring pliers. Remove any burrs from crankshaft ring groove before removing starter gear, or starter gear bushing may be damaged when gear is removed.

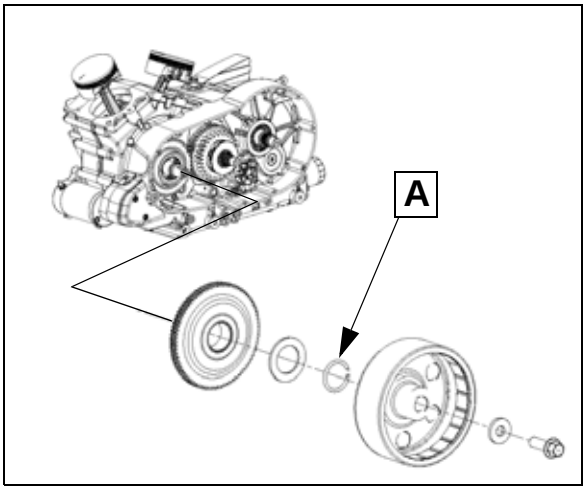

5. Remove flat washer and gear.

STARTER GEAR INSPECTION

1. Inspect gear teeth for chips, cracks or excessive wear.

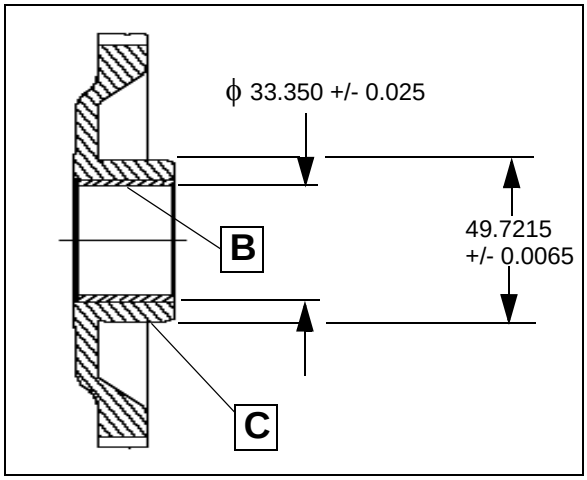

2. Inspect bushing (B) for excessive wear and scoring.
3. Inspect one-way clutch hub (C) for wear, scoring or rough surface.
4. Measure I.D. of bushing and O.D. of one-way clutch hub and compare to specification.
5. Replace gear if wear or damage is evident.

STARTER CLUTCH REMOVAL / INSPECTION

1. Remove one-way clutch from primary drive gear.
2. Note direction of one-way clutch with flanged side (D) inward (toward engine) for reassembly.

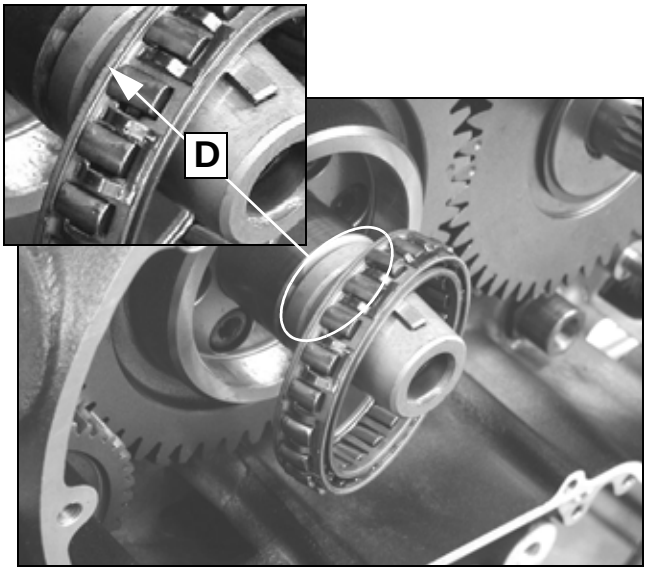

3. Inspect cage for cracks. Check band springs for tension and proper function.
4. Inspect clutch lobes for wear, galling, or rough surface.
5. See “STARTER GEAR / STARTER CLUTCH INSTALLATION” on page 9.32

© 2009 Polaris Sales Inc.

PRIMARY DRIVE GEAR

PRIMARY DRIVE GEAR REMOVAL / INSPECTION

1. Install engine lock tool in position (A) to hold crankshaft gear stationary while removing bolts.
2. Remove primary gear screws. NOTE: Install new screws with pre-applied locking agent upon assembly.
3. Use a primary cover screw to pull idler gear shaft (B).

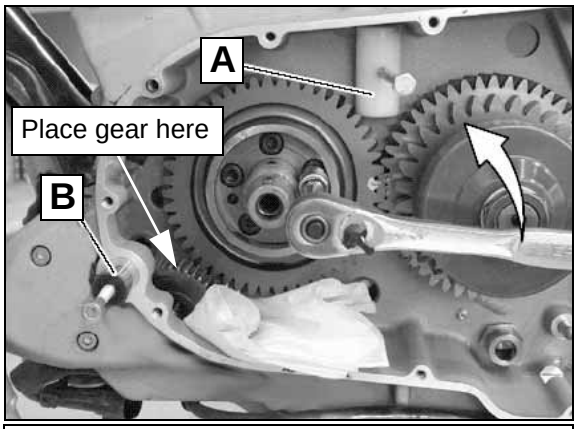

IMPORTANT! Position idler gear as shown for primary gear removal. If removed from the case, place idler gear back in this position BEFORE installing primary gear.

4. Pull primary drive gear off crankshaft.
5. Remove idler gear from crankcase.
6. Inspect clutch hub surface (C) inside primary drive gear for wear, scoring, nicks, or rough surface.

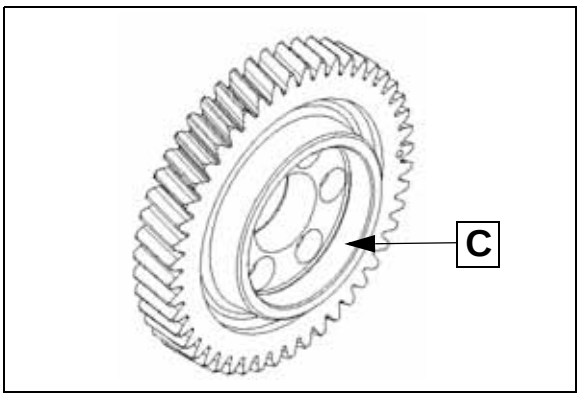

7. Inspect gear teeth on idler and primary drive gear for chips, cracks or excessive wear.
8. Remove starter drive cover.
9. Pull torque limiter clutch shaft out through cover opening with washer.

NOTE: Stepped side of washer faces out (toward gear) and flat side of washer is against limiter clutch (inset).

10. Remove torque limit clutch.

STARTER TORQUE LIMIT CLUTCH INSPECTION

1. Mount torque limit clutch in a soft jawed vise across entire gear face (D). Clamp only tight enough to prevent gear rotation.

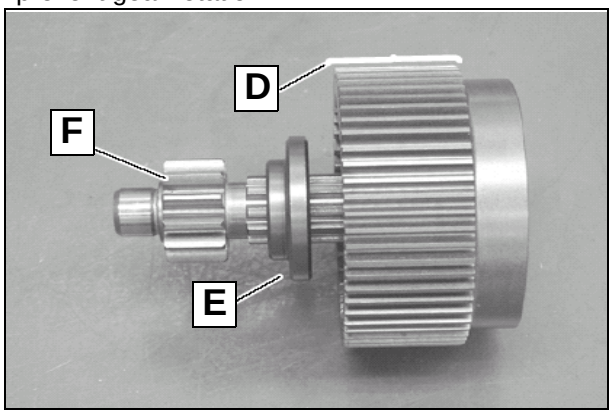

2. Install shaft *with spacer* (E).
3. Use a 19mm 12 point socket on gear (F).
4. Read torque at point of clutch slip.

Limit Clutch Break-Away Torque:
Standard: 46-61 Nm (35-45 lb.-ft.)
Service Limit: 40 Nm (30 lb.-ft.)

© 2009 Polaris Sales Inc.

PRIMARY DRIVE GEAR INSTALLATION

1. Clean mating surfaces of crankshaft and gear.
2. Clean screw threads in crankshaft to remove all locking agent, oil, and grease with Loctite™ Primer N and dry with low pressure air.

NOTE: Starter torque limit clutch (A) and idler gear (B) MUST be placed in the case **before** the primary drive gear is installed.

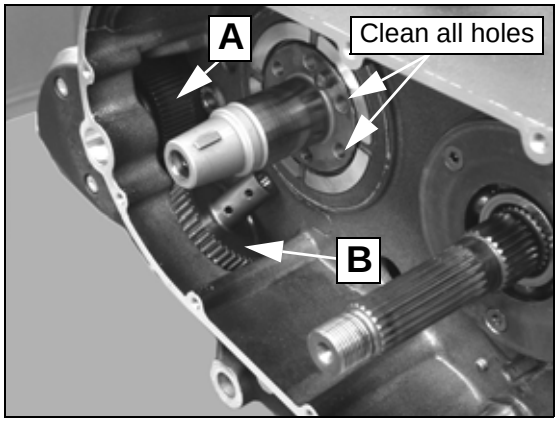

3. Place idler gear in crankcase but do not install shaft.
4. Temporarily install rotor to rotate engine until key is pointing UP. Remove rotor.
5. Install primary gear on crankshaft with dot on gear at the 3:00 position (90 degrees to the rear).

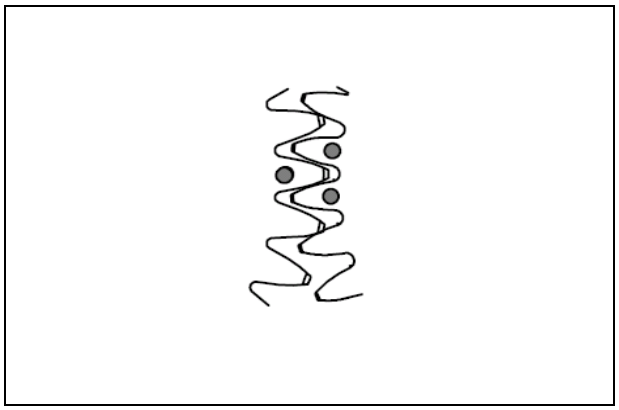

6. Engage teeth of primary gear and split gear, with dot on primary gear between two dots on split gear.
7. Place engine lock tool between bottom of inner split gear and crankcase.
8. Install drive gear. If split gear is installed, rotate drive gear clockwise against spring pressure until split gear teeth align. Push gear in and rotate until pin on crankshaft aligns with hole on the back of drive gear. Primary and split gear teeth will be flush if fully seated.

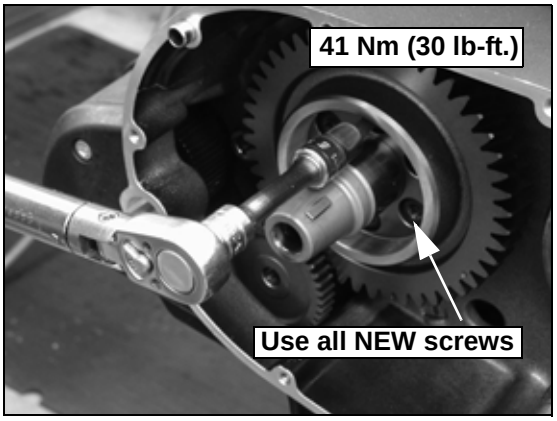

9. Install new primary drive gear screws. These screws have a pre-applied locking agent. Always replace these screws if loosened or removed.
10. Install screws and torque in 2 steps following a star pattern to 41 Nm (30 lb-ft.). Repeat final torque on all screws.
11. Install idler gear and shaft (C).

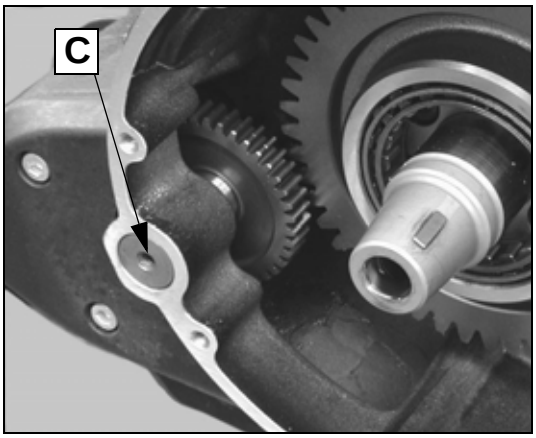

12. Install starter clutch and gear (page 9.32).

© 2009 Polaris Sales Inc.

STARTER GEAR / STARTER CLUTCH INSTALLATION

1. Install one-way clutch with raised edge (A) inward (toward primary gear).

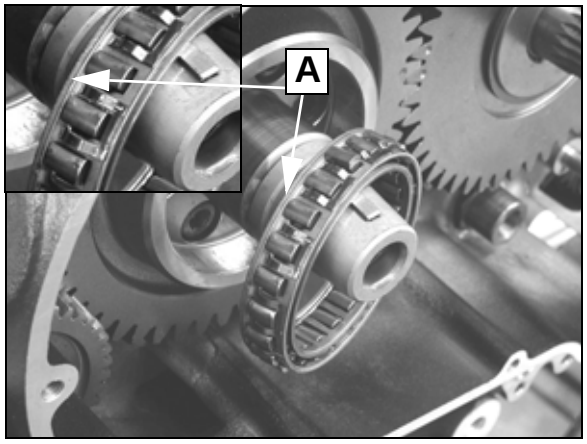

2. Install starter gear (B). When properly installed, the starter gear should rotate smoothly in a clockwise direction and lock to the primary gear when you attempt to rotate it counterclockwise.

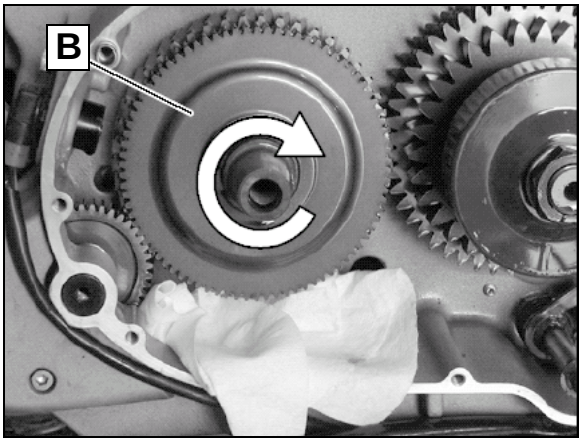

3. Install washer (C).

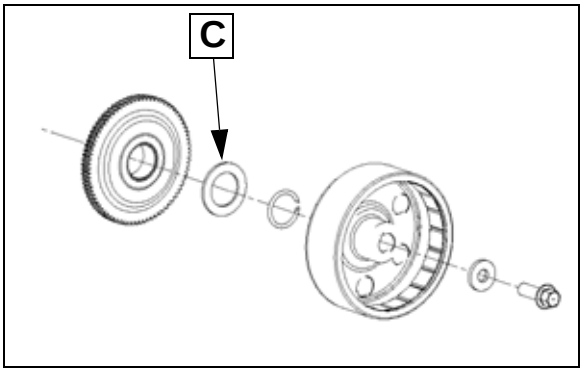

4. Install retaining ring (D).

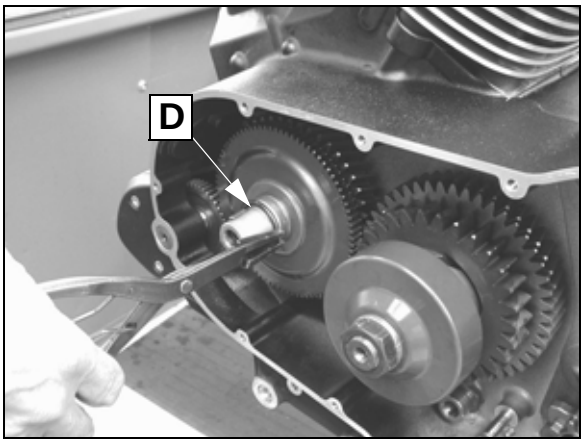

5. Install rotor (page 9.27).
6. Install primary cover (page 9.14).
7. Check engine oil and fill to proper level.

© 2009 Polaris Sales Inc.

TROUBLESHOOTING

TROUBLESHOOTING

PROBLEM	POSSIBLE CAUSE	PART(s) AFFECTED	REPAIR RECOMMENDED
Clutch Lever Pulls Excessively Hard	Clutch lever pivot, bushings, ferrules need lubrication	Clutch Lever Pivot Point	Lubricate
	Contaminated hydraulic system	Master cylinder or Slave cylinder	Inspect
	Drive plates catching on primary driven gear basket	Clutch Primary Driven Gear/ Clutch Plates	Replace Necessary Parts
	Clutch lifter plate bearing damage	Clutch Plate Bearing Lifter	Replace
	Damaged clutch lifter mechanism	Clutch Release Mechanism or Slave Cylinder	Repair as Necessary
Clutch Slips	Clutch Spring Weak	Clutch Spring	Replace
	Contaminated hydraulic system	Master or Slave cylinder	Inspect
	Clutch Spring Snap ring Loose or Broken	Clutch Spring Snap ring	Repair or Replace as Necessary
	Pressure Plate Worn or Warped / Distorted	Pressure Plate	Replace
	Clutch Plate(s) Worn or Warped/ Distorted	Driven Plates (possibly drive plates)	Replace
	Clutch Lifter Mechanism Sticking	Clutch Lifter Mechanism	Repair
	Engine Oil Level Low	Oil Level	Correct
	Oil Additives Present in Oil or Used Previously	Oil Quality	Replace oil & filter (clutch plates may need to be replaced)
Dragging Clutch (doesn't disengage completely, creeping, hard to find Neutral)	Clutch Lever, master cylinder or slave cylinder sticking	Lever, Master or Slave cylinder	Inspect
	Air in hydraulic system	Master or Slave cylinder	Inspect / Bleed (Ch15)
	Oil Additives Present in Oil or Used Previously	Oil Quality	Replace oil & filter (clutch plates may need to be replaced)
	OIl Level Too High	Oil Level	Correct
	Oil Viscosity Too High	Oil Quality	Replace Oil & Filter
	Pressure Plate Worn or Warped/ Distorted	Pressure Plate	Replace
	Clutch Plate(s) Warped / Distorted	Driven Plates (possibly drive plates)	Replace
	Weak Clutch Spring(s)	Clutch Springs	Replace All

© 2009 Polaris Sales Inc.

PROBLEM	POSSIBLE CAUSE	PART(s) AFFECTED	REPAIR RECOMMENDED
Transmission Will Not Shift	Broken Shift Drum	Shift Drum	Replace shift drum
	Bent Shift Forks	Shift Fork	Replace shift forks
	Worn Shift Drum	Shift Drum	Replace shift drum
	Broken Gears	Transmission Gears	Replace broken gear(s)
	Damaged/Broken Bearings	Transmission, Shift Cam Bearings	Replace bearings that fail inspection
	Worn Gear Shift Pawl Ratchet Mechanism	Shift Pawl Mechanism	Replace parts that fail inspection
	Broken or dislodged shift shaft return spring	Shift Shaft Return Spring	Repair or Replace
	Roller Detent Arm Seized	Roller Detent Arm	Repair or replace parts
	Bent Shift Shaft (internal)	Shift Shaft	Repair or Replace
	External Shift Linkage Binding or Damaged	External Shift Linkage	Repair or Replace as
	Bent or Distorted Shift Forks	Shift Forks	Replace
	Bent or Distorted Shift Fork Rails	Shift Fork Rails	Replace
	Broken Transmission Components	Transmission Components	Repair or Replace
Transmission Hard to Shift	Improper Clutch Operation	Clutch	Inspect, Repair
	Incorrect Oil Viscosity	Oil Quality	Replace Engine Oil
	Incorrect Clutch Adjustment	Clutch Adjustment	Adjust
	Shift Shaft Damaged	Shift Shaft Components	Repair or Replace
	Sticking Pivot Point, Bent External Shift Linkage	External Shift Linkage	Repair or Replace
	Bent or Distorted Shift Forks	Shift Forks	Replace
	Damaged Shift Drum Grooves	Shift Drum	Repair or Replace
	Shift Detent Plunger Stuck	Shift Detent Plunger	Repair or Replace
	Bent/Binding Shift Fork Rails	Shift Fork Rails	Repair or Replace
Transmission Jumps Out of Gear	Broken / Loose Stop Pin	Shift Stop Pin	Replace
	Worn Shift Drum or Shift Drum Ratchet	Shift Drum or Shift Linkage	Replace as Necessary
	Broken Shift Return Spring	Shift Return Spring	Replace
	Damaged Shift Drum Grooves	Shift Drum	Repair or Replace
	Bent or Worn Shift Forks	Shift Forks	Repair or Replace
	Bent/Binding Shift Fork Rails	Shift Fork Rails	Repair or Replace
	Worn Engagement Dogs on Transmission Gears	Transmission Gears	Repair or Replace
Transmission Noise	Drive Belt Tension Incorrect	Drive Belt	Adjust or Replace
	Clutch Plates Bind or Drag (When Clutch is Disengaged)	Clutch Plates	Adjust / Repair / Replace
	Gear/Bearing Wear/Damage	Transmission Components	Inspect / Repair / Replace

© 2009 Polaris Sales Inc.

CHAPTER 10
TRANSMISSION & CRANKSHAFT

GENERAL 10.2
SERVICE INFORMATION 10.2
SPECIAL TOOLS 10.2
CRANKCASE / CRANKSHAFT / CONNECTING ROD SPECIAL TOOLS. 10.2
SPECIFICATIONS. 10.2
DRIVE TRAIN 10.2
CONNECTING ROD AND CRANKSHAFT SPECIFICATIONS 10.3
ASSEMBLY VIEWS & TORQUE VALUES 10.4
CRANKCASE COMPONENTS. 10.4
CRANKSHAFT / CONNECTING ROD / CRANKCASE TORQUE PATTERN 10.5
CRANKCASE BOLT LENGTH AND TORQUE PATTERN. 10.5
SERVICE PROCEDURES. 10.6
CRANKCASE SEPARATION 10.6
TRANSMISSION ASSEMBLY VIEW 10.8
MAINSHAFT / CLUTCH SHAFT ASSEMBLY VIEW 10.9
COUNTERSHAFT ASSEMBLY VIEW 10.10
SHIFT DRUM AND SHIFT FORK ASSEMBLY VIEW 10.11
POWER DELIVERY 10.12
TRANSMISSION REMOVAL 10.13
CLUTCH SHAFT INSPECTION / REMOVAL. 10.13
TRANSMISSION INSPECTION 10.14
CRANKSHAFT REMOVAL. 10.15
CONNECTING ROD SIDE CLEARANCE INSPECTION 10.16
CONNECTING ROD REMOVAL / IDENTIFICATION. 10.16
CONNECTING ROD INSPECTION (BIG END) 10.17
CONNECTING ROD BEARING INSPECTION. 10.17
CONNECTING ROD BEARING CLEARANCE INSPECTION (TYPICAL) 10.18
CONNECTING ROD BEARING SELECTION 10.18
CRANKSHAFT INSPECTION. 10.19
CONNECTING ROD INSTALLATION 10.19
CRANKSHAFT CLEANING 10.20
MAIN BEARING INSPECTION. 10.20
MAIN BEARING OIL CLEARANCE INSPECTION. 10.20
LEFT CRANKCASE ASSEMBLY 10.21
RIGHT CRANKCASE ASSEMBLY. 10.22
CRANKCASE REED VALVE ASSEMBLY REMOVAL & INSPECTION. 10.22
CRANKSHAFT INSTALLATION. 10.22
TRANSMISSION INSTALLATION 10.23
BALANCE SHAFT 10.24
BALANCE SHAFT REMOVAL & INSPECTION 10.24
BALANCE SHAFT INSTALLATION 10.24
CRANKCASE. 10.25
CRANKCASE ASSEMBLY & SEALING 10.25
TROUBLESHOOTING. 10.28
TROUBLESHOOTING 10.28

© 2009 Polaris Sales Inc.

GENERAL

SERVICE INFORMATION

- Remove engine from frame to service internal transmission and/or crankshaft components (Chapter 6).
- The crankcase must be separated to access internal transmission components and crankshaft. Remove:
  - •Cylinder heads
  - •Cylinders & pistons
  - •Gear shift linkage
  - •Primary cover and components (as required depending on needed access to other components).
  - •Regulator / Rectifier and Bracket.
  - •Starter motor
- Label and store parts neatly to speed the assembly process and ensure that matched parts like connecting rods, camshaft carriers, and bearings can be installed in their original location.
- Crankshaft main bearing replacement requires line boring. This procedure requires full machine shop capabilities and specialized knowledge. It is recommended that a qualified machine shop perform this procedure if it becomes necessary or replace the crankcase assembly.
- Crankshafts and connecting rods are color coded for manufacturing tolerances with a white or red paint mark (or stamped “R” or W”). See page 10.18.
- All torque specifications are "dry" unless specified for oil or locking agent. Refer to exploded views.
- When locking agents are required, use Loctite™ Primer N to clean fastener before applying locking agent. Primer N reduces cure time of thread locking agent in addition to preparing the surfaces.

SPECIAL TOOLS

CRANKCASE / CRANKSHAFT / CONNECTING ROD SPECIAL TOOLS

Crankshaft Main Bearing Protector: PV-47207
Crankcase Separator: PV-47332
Crankcase Assembly Tools:
Base Tool: PV-45030
Collar: PV-46299 (M36 x 1.50 thread for use with PV-45030
Assembly Adapter: PVX-47429 (for use with PV-45030)
Drive Sprocket Seal Installer: PV-43505A

Clutch Shaft Installation Tool: PV-47331

SPECIFICATIONS

DRIVE TRAIN

Item		Specifications
Drive Train (General)	Transmission	6 Speed (Overdrive)
	Primary Reduction Ratio	1.50: 1
	Final Reduction Ratio	2.12: 1
Drive Train (Gear Ratios)	Gear Ratio: 1st Gear	3.15: 1
	Gear Ratio: 2nd Gear	2.03: 1
	Gear Ratio: 3rd Gear	1.53: 1
	Gear Ratio: 4th Gear	1.24: 1
	Gear Ratio: 5th Gear	1.00: 1
	Gear Ratio: 6th Gear (Overdrive)	0.84: 1

© 2009 Polaris Sales Inc.

CONNECTING ROD AND CRANKSHAFT SPECIFICATIONS

CRANKSHAFT and COMPONENTS			
Part	**Part Specific**	**Standard**	**Service Limit**
Connecting Rod	Connecting Rod to Crankshaft Side Clearance	.22 - .42 mm (.0087 - .0165")	.65 mm (.025")
	Connecting Rod Bearing to Crankshaft Oil Clearance	.0254 - .0635 mm (.001 - .0025")	.11 mm (.0043")
	Connecting Rod Small End I.D.	22.01 - 22.02 mm (.8665 - .8670")	22.09 mm (.8694")
	Connecting Rod Width	20.28 - 20.34 mm (.798 - .801")	20.03 mm (.788")
	Connecting Rod Big End I.D. (White)	50.84 - 50.85 mm (2.0016 - 2.0020")	50.89 mm (2.0031")
	Connecting Rod Big End I.D. (Red)	50.85 - 50.86 mm (2.0019 - 2.0024")	50.89 mm (2.0034")
Crankshaft Main Bearing / Rod Journals	Connecting Rod Journal Width	40.00 - 40.58 mm (1.5748 - 1.5976")	41.35 mm (1.627")
	Crankshaft Rod Journal O.D. (White)	47.970 - 47.978 mm (1.888 - 1.889")	47.94 mm (1.8871")
	Crankshaft Rod Journal O.D. (Red)	47.978 - 47.986 mm (1.8888 - 1.8891")	47.95 mm (1.8875")
	Main Bearing Oil Clearance	Left .013 - .060 mm (.0005 - .0023") Right .014 - .061mm (.0005 - .0024")	.10 mm (.004") .10 mm (.004")
	Left Main Bearing Journal O.D.	64.952 - 64.973 mm (2.5571 - 2.5579")	64.93 mm (2.556")
	Right Main Bearing Journal O.D.	59.952 - 59.973 mm (2.3603 - 2.3611")	59.93 mm (2.359")
	Crankshaft End Play	.05 - .30 mm (.0019 - .0118")	-
Balance Shaft	Journal O.D., Left (Primary Side) Journal O.D., Right (Oil Pump Drive Side)	29.980 - 29.992 mm 29.969 - 29.979 mm	-
Transmission			
Shift Fork	Shift Fork I.D. (Dimension A, page 10.11)	12.00 - 12.026 mm (.4725 - .4732")	12.05 mm (.4744")
	Shift Fork Pin O.D. (Dimension B, page 10.11)	6.036 - 6.136 mm (.2376 - .2416")	6.02 mm (.2370")
	Shift Fork Width (Dimension D, page 10.11)	5.10 - 5.30 mm (.2008 - .2086")	5.05 mm (.1988")
Shift Fork Rail	Shift Fork Rail O.D. (Dimension C, page 10.11)	11.948 - 11.972 mm (.4704 - .4713")	11.92 mm (.4693")
	Shift Fork Rail Runout	-	.025 mm (.001")
Shift Drum	Shift Drum Groove	-	Replace drum if any wear is evident

© 2009 Polaris Sales Inc.

ASSEMBLY VIEWS & TORQUE VALUES

CRANKCASE COMPONENTS

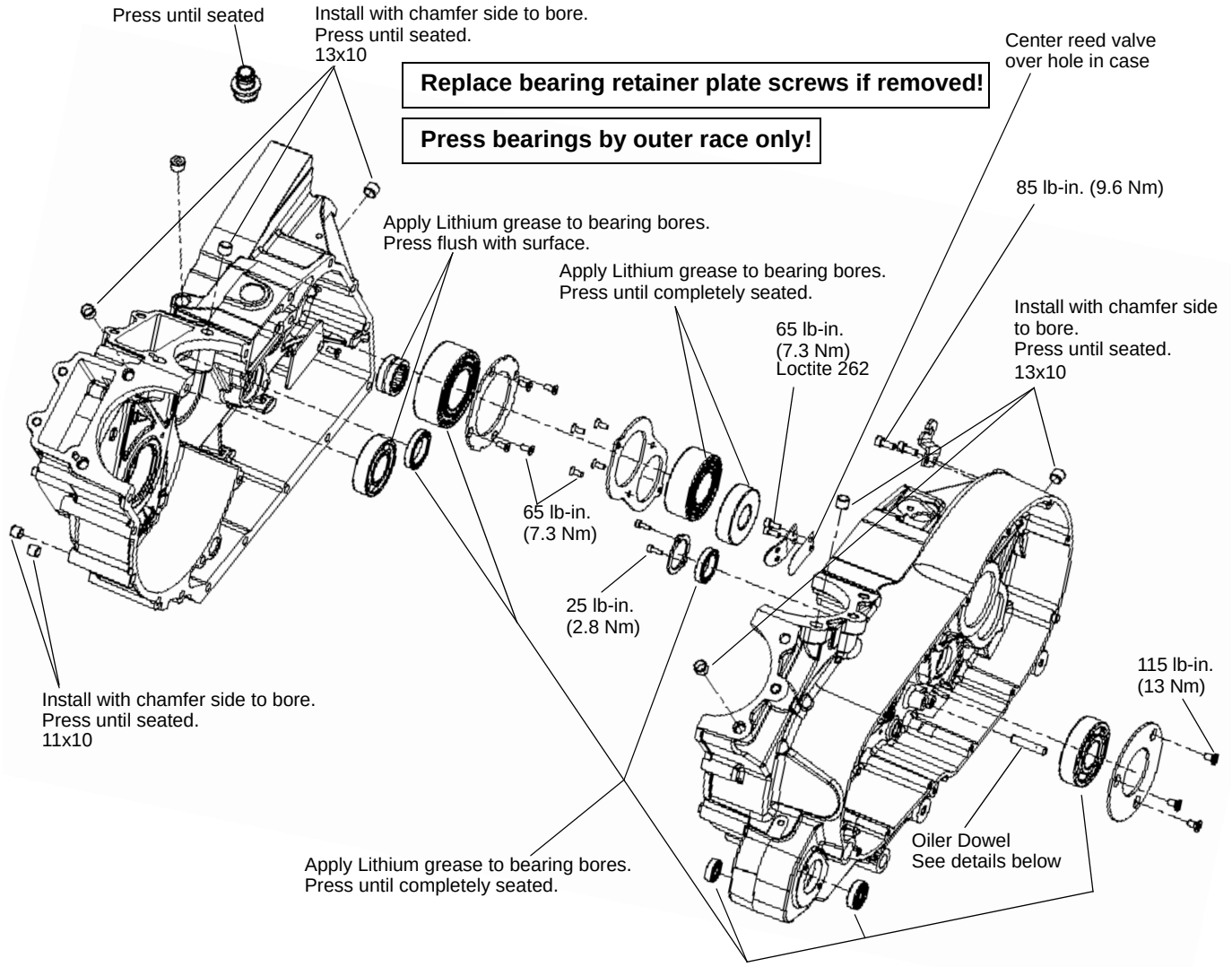

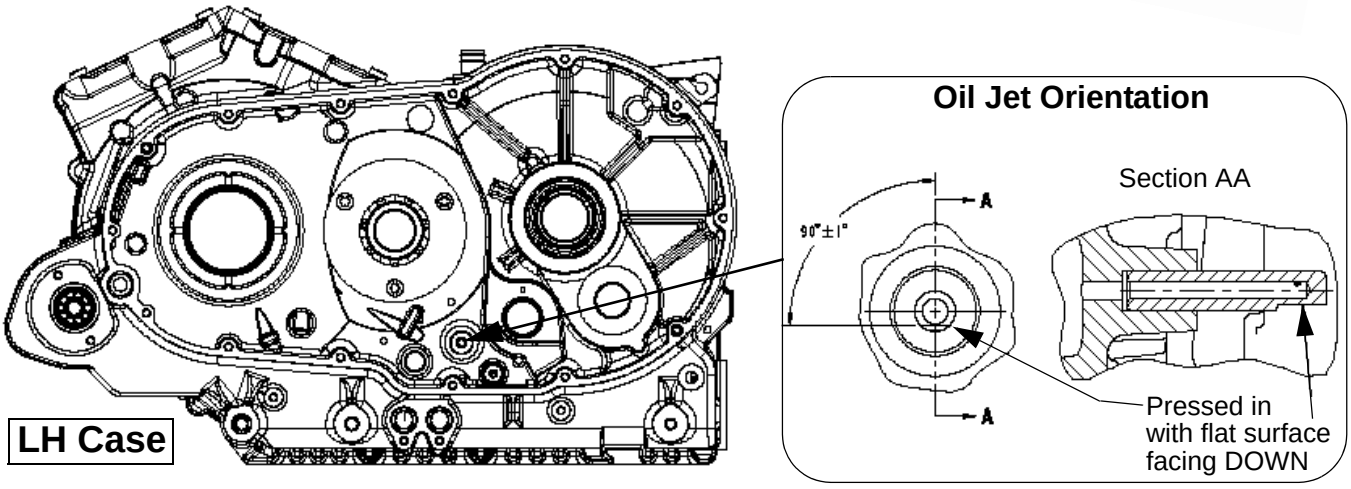

© 2009 Polaris Sales Inc.

CRANKSHAFT / CONNECTING ROD / CRANKCASE TORQUE PATTERN

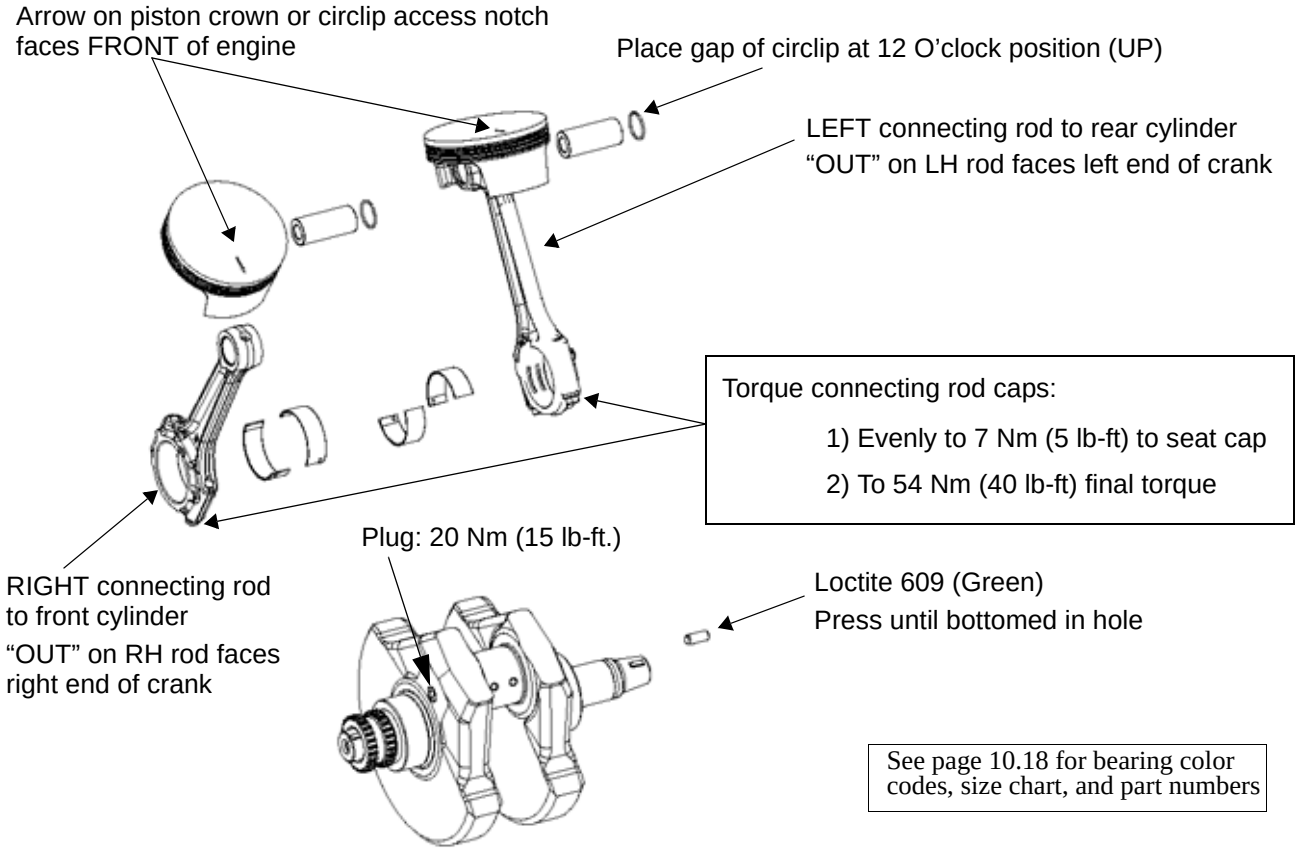

See page 10.18 for bearing color codes, size chart, and part numbers

CRANKCASE BOLT LENGTH AND TORQUE PATTERN

Crankcase Bolt Torque: Torque bolts in order 1-14 (shown below) in two steps to 30 Nm (22 lb-ft.).
Repeat 30 Nm (22 lb ft. torque.

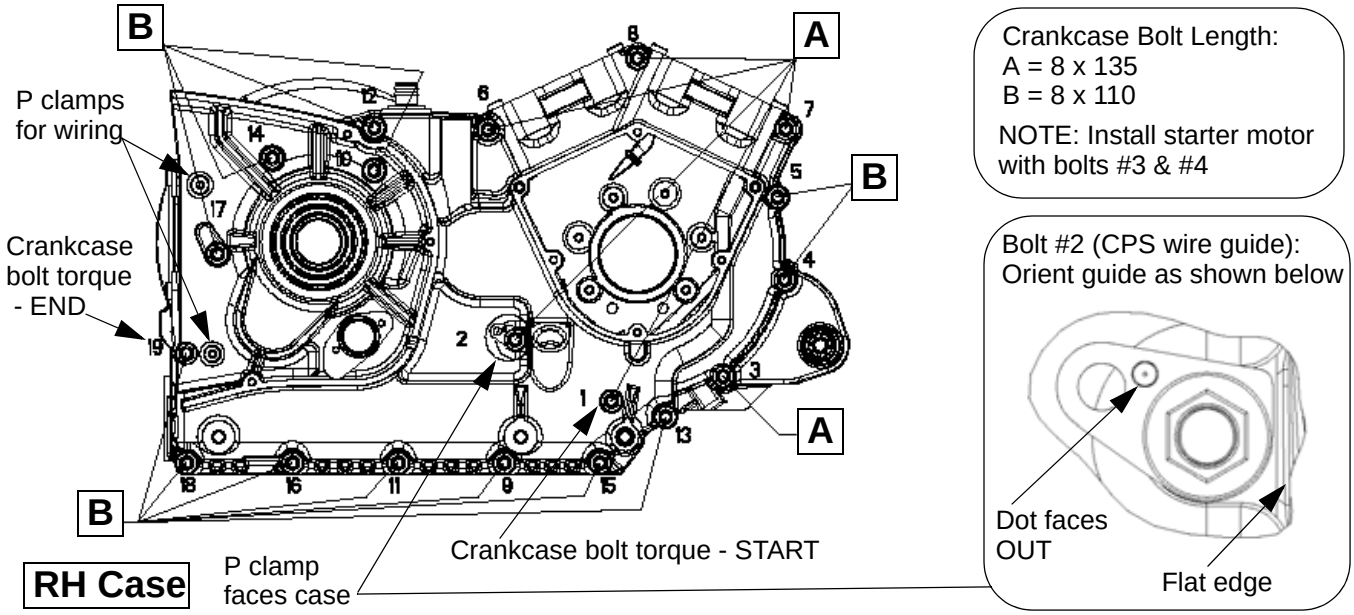

© 2009 Polaris Sales Inc.

SERVICE PROCEDURES

CRANKCASE SEPARATION

1. Drain engine oil.
2. Remove drive sprocket (Chapter 11).
3. Remove regulator / rectifier to avoid damage.
4. Remove engine and mount securely on an engine stand. (Chapter 6).
5. Remove primary cover (Chapter 9).
6. Remove cylinder heads (Chapter 7), cylinders, and pistons (Chapter 8).
7. Remove shift ratchet and clutch (Chapter 9).

NOTE: For transmission service only, remove:

- Clutch
- Shift drum star (A).
- Countershaft retaining bolt (C).

This allows transmission removal after cases are split.

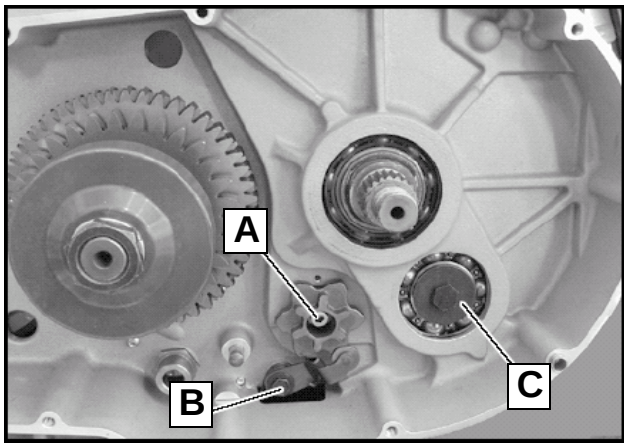

NOTE: For complete engine disassembly, refer to Chapter 9 to remove:

- Flywheel
- Torque compensator
- Starter gear & one way clutch
- Primary drive gear
- Starter idler gear and shaft

8. Remove starter motor.
9. Loosen remaining crankcase bolts evenly and remove from case. Note the two different bolt lengths and the locations of each (page 10.5).
10. Install the crankshaft bearing protector over the cam chain drive gear on the crankshaft.

Special Tool: Crankshaft Bearing Protector PV-47207

11. Install crankcase separator tool on crankcase over the main shaft and tighten screws. Tighten the center screw while tapping with a soft faced mallet.

Special Tool: Crankcase Separator PV-47332A

NOTE: PV-47332 can be modified for use on 2008 crankcase. Drill an additional hole in the location shown (see bottom photo).

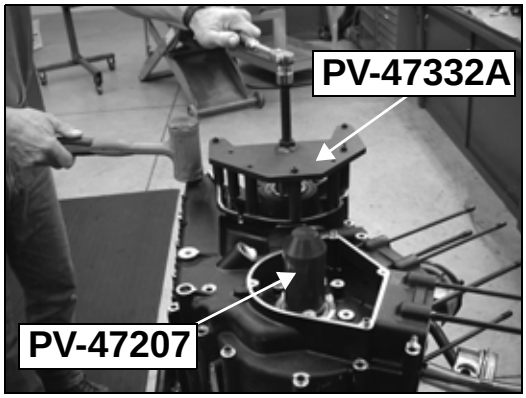

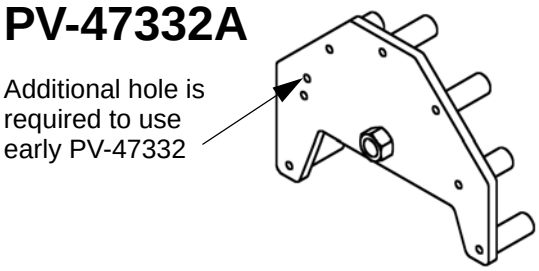

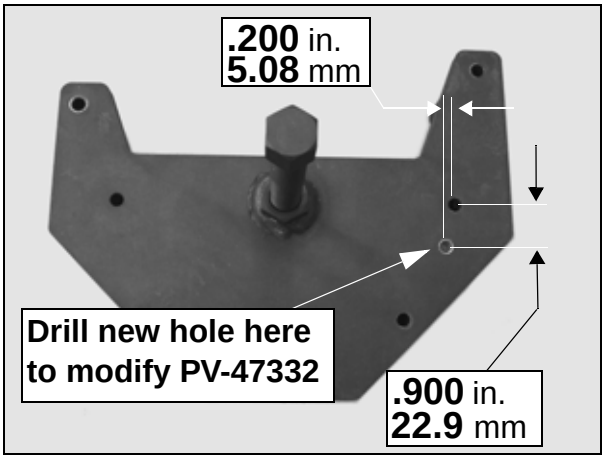

PV-47332 Modification Detail for 2008 Case

© 2009 Polaris Sales Inc.

12. Lift crankcase off and remove bearing protector from cam chain drive sprocket.

NOTE: Components such as the crankshaft, oil pump, balance shaft, transmission, and shift drum can be removed individually for service.

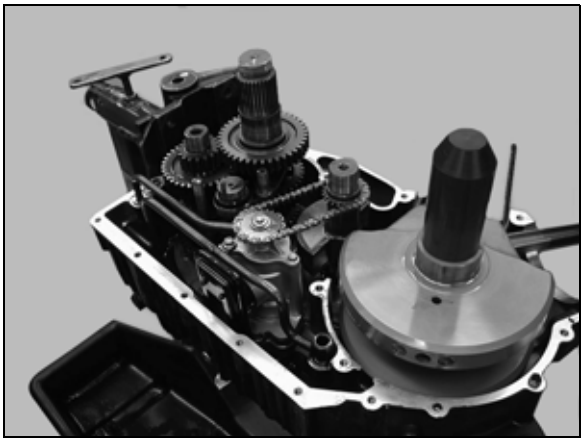

Refer to the following pages as required:

- Crankshaft Service: Page 10.15
- Oil Pump Service: Page 4.9
- Balance Shaft: Page 10.24
- Shift Drum / Transmission: Page 10.13

© 2009 Polaris Sales Inc.

TRANSMISSION ASSEMBLY VIEW

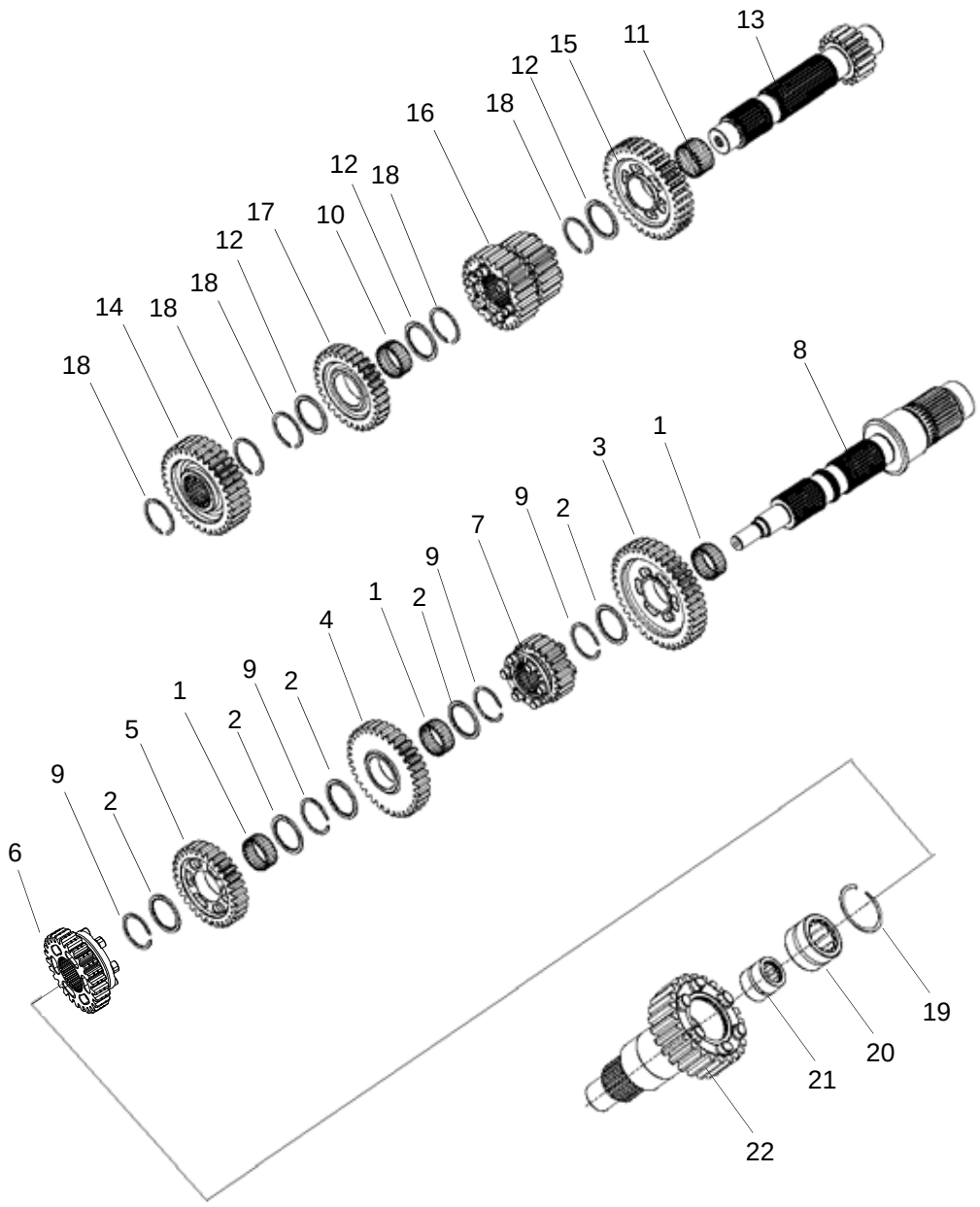

MAIN SHAFT

1. Roller Bearing 28 x 32 x 12.7
2. Thrust Washer
3. First Gear Mainshaft 39T
4. 2nd Gear Mainshaft 34T
5. 3rd Gear Mainshaft 30T
6. 4th gear Mainshaft 27T
7. 6th Gear mainshaft 22T
8. Mainshaft, Wide
9. Retaining Ring, External

COUNTER SHAFT

10. Roller Bearing 28 x 32 x 12.7
11. Roller Bearing 28 x 32 x 17.0
12. Thrust Washer
13. Countershaft (1st Gear CS 17T)
14. 5th Gear Countershaft, 33T
15. 6th Gear Countershaft, 36T
16. 2nd (23T) & 3rd (27T) Gear CS
17. 4th Gear Countershaft, 30T
18. Retaining Ring, External

CLUTCH SHAFT

19. Retaining Ring, External
20. Needle Bearing, 20 x 32 x 20
21. Needle Bearing, 14 x 22 x 20
22. Clutch Shaft (5th gear main) 24T

© 2009 Polaris Sales Inc.

MAINSHAFT / CLUTCH SHAFT ASSEMBLY VIEW

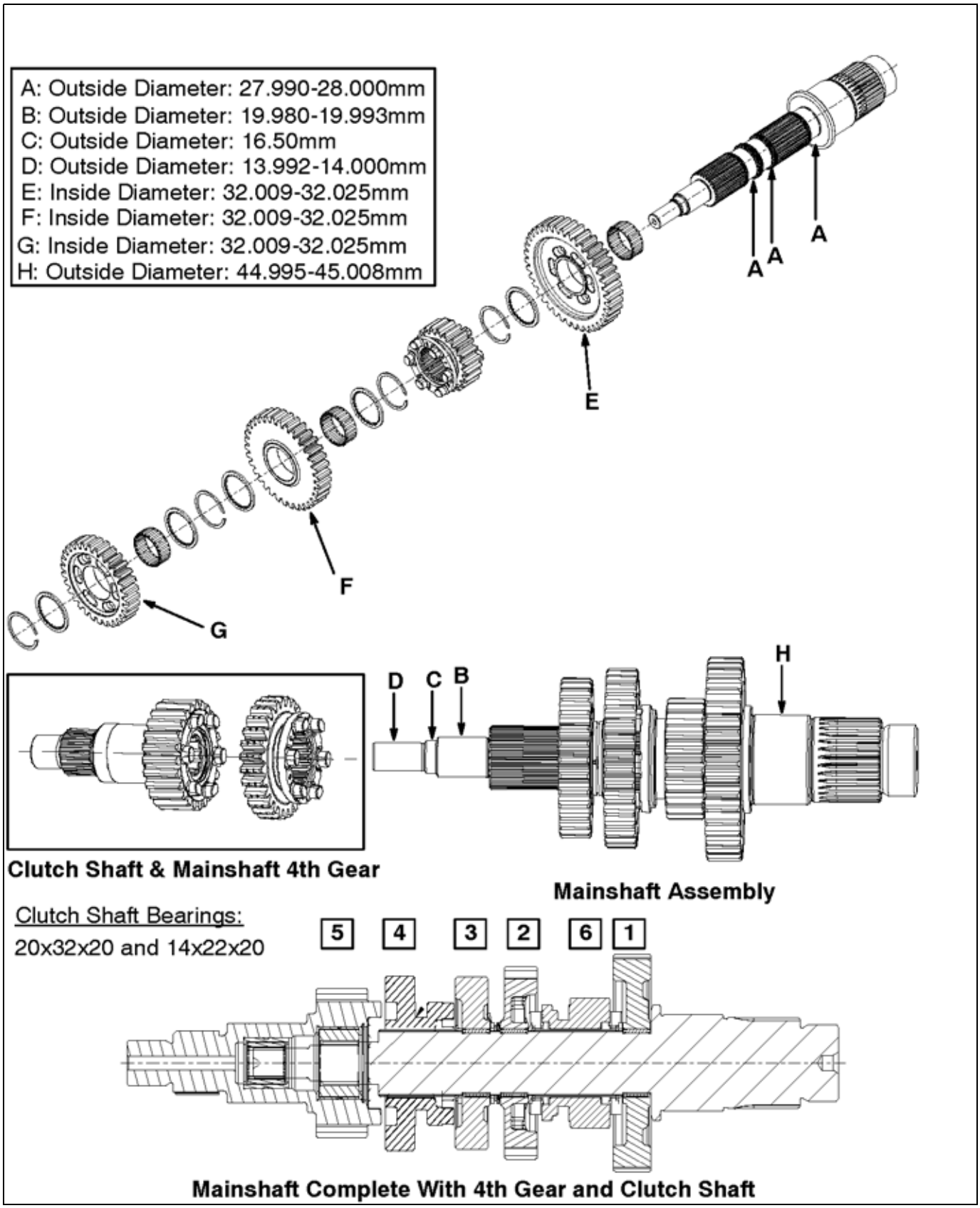

© 2009 Polaris Sales Inc.

COUNTERSHAFT ASSEMBLY VIEW

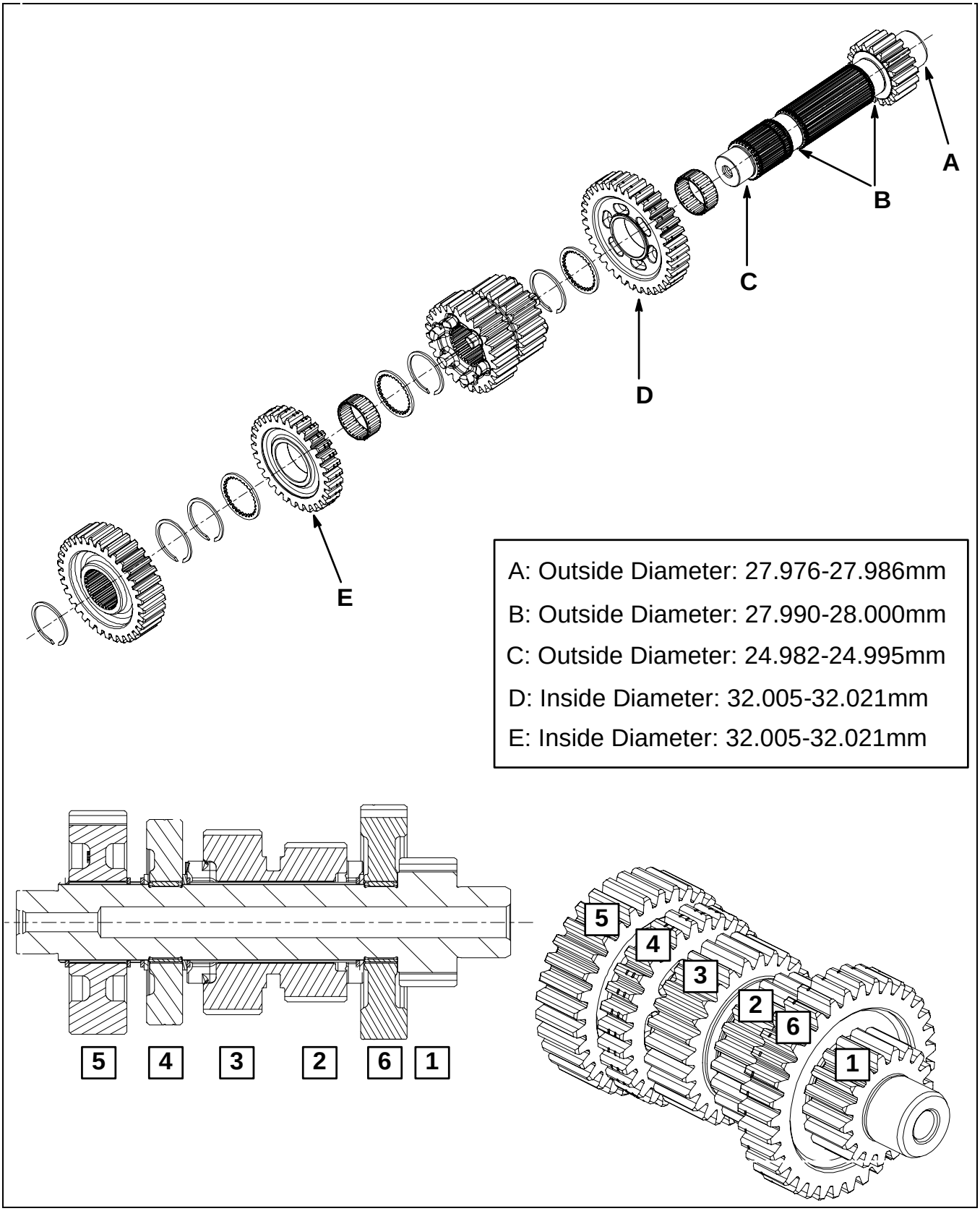

© 2009 Polaris Sales Inc.

SHIFT DRUM AND SHIFT FORK ASSEMBLY VIEW

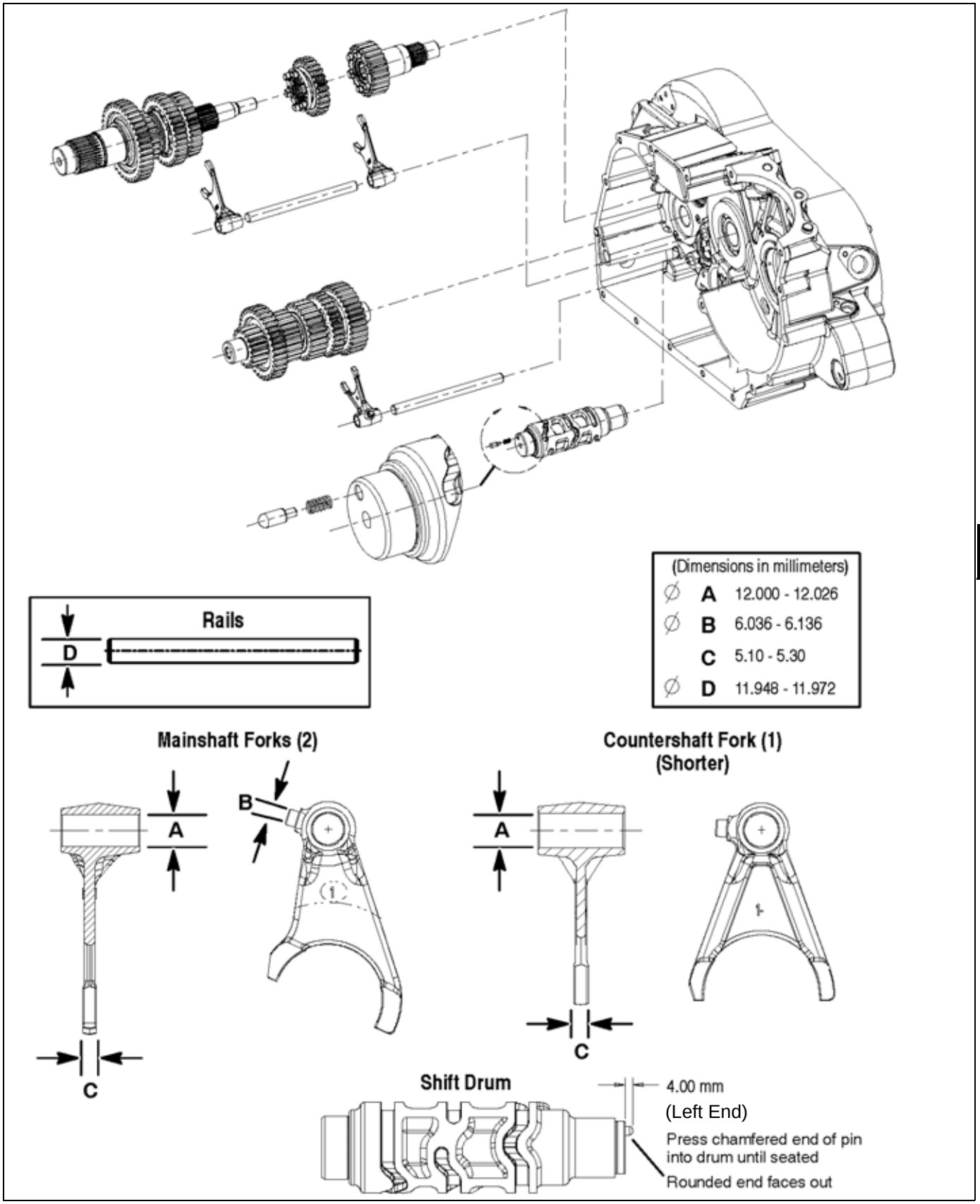

© 2009 Polaris Sales Inc.

POWER DELIVERY

VIEWED FROM FRONT OF ENGINE

Indicates movement of sliding gear for engagement

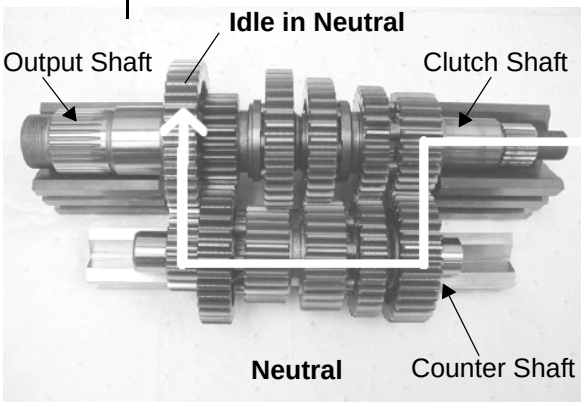

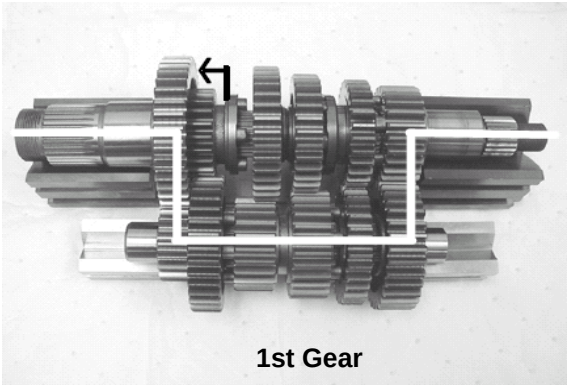

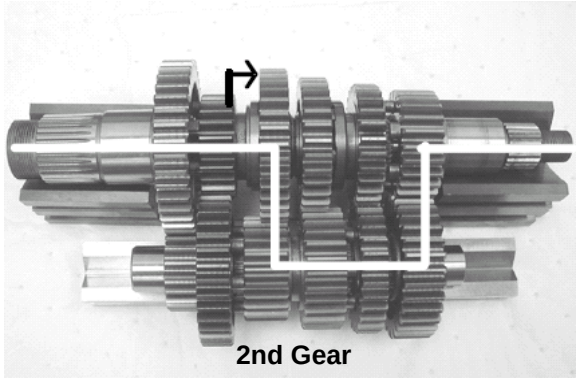

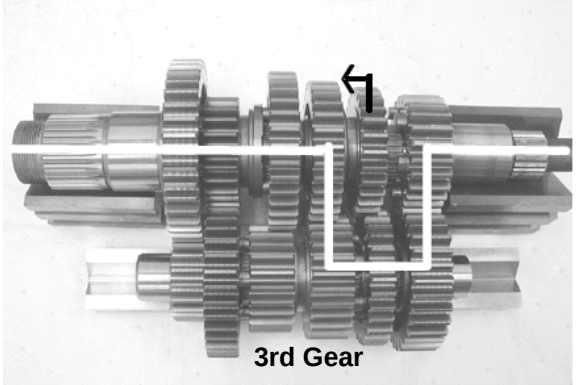

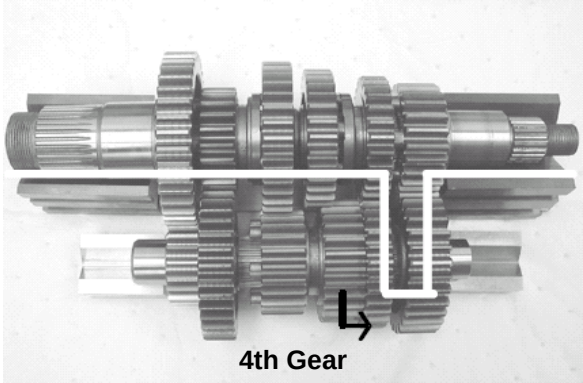

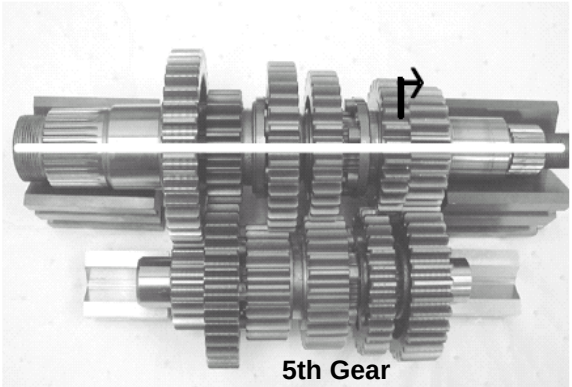

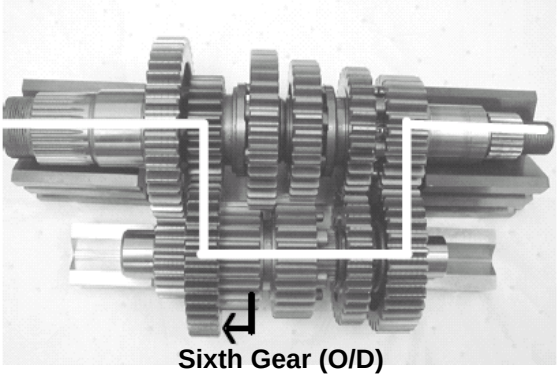

© 2009 Polaris Sales Inc.

TRANSMISSION REMOVAL

1. If not removed previously, remove countershaft locating bolt and washer (A). Use clutch shaft older PV-45028 to prevent shaft rotation.

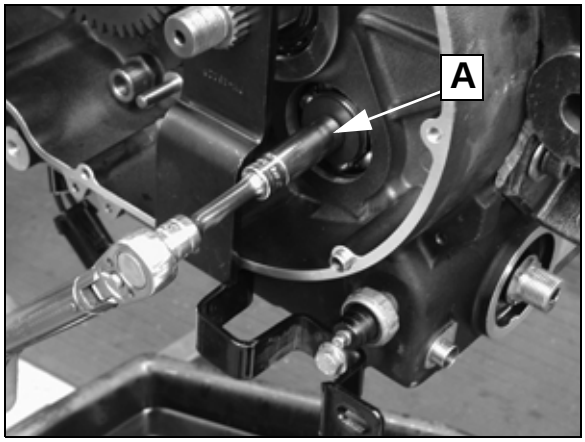

2. Remove shift drum star (B).

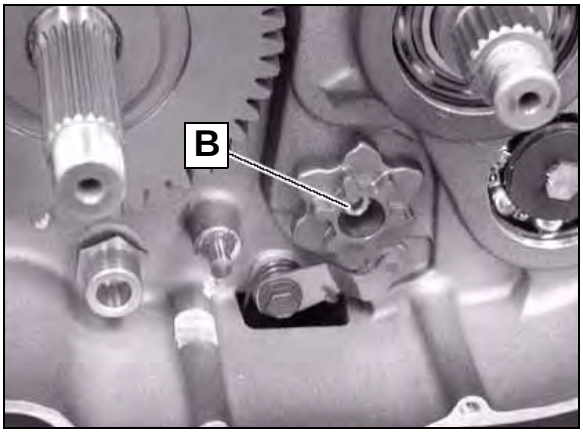

3. Remove shift fork shafts (C).
4. Disengage shift forks from grooves in the shift drum.

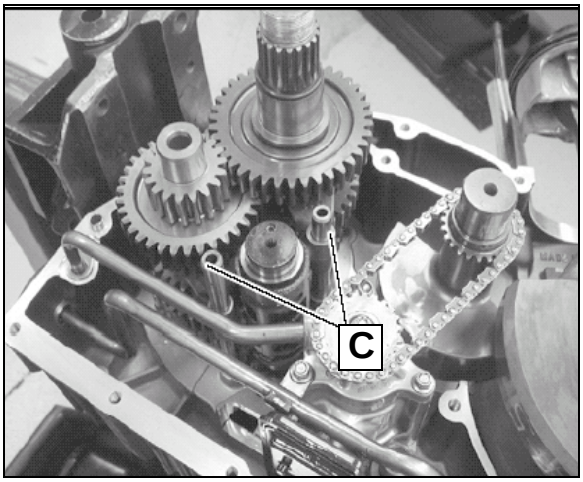

5. Remove shift forks, shift drum, mainshaft and countershaft from crankcase.
6. Carefully lift crankshaft out of left case.
7. Remove oil pump sprocket, chain, oil pipes, and pump (Chapter 4).
8. Pull balance shaft from left case.

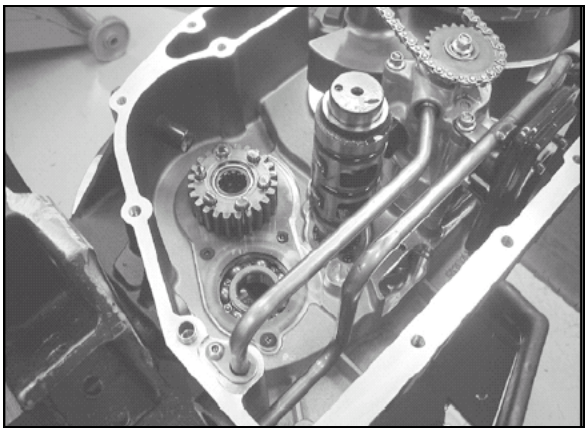

CLUTCH SHAFT INSPECTION / REMOVAL

1. The clutch shaft (D) (Mainshaft 5th) is press-fit in the bearing inner race. Inspect shaft and bearing with clutch shaft in the crankcase. Rotate gear and check for smooth movement and no play. Inspect gear, bearings, and shaft splines for wear or damage. Remove clutch shaft if bearing or gear service is required (Step 2).

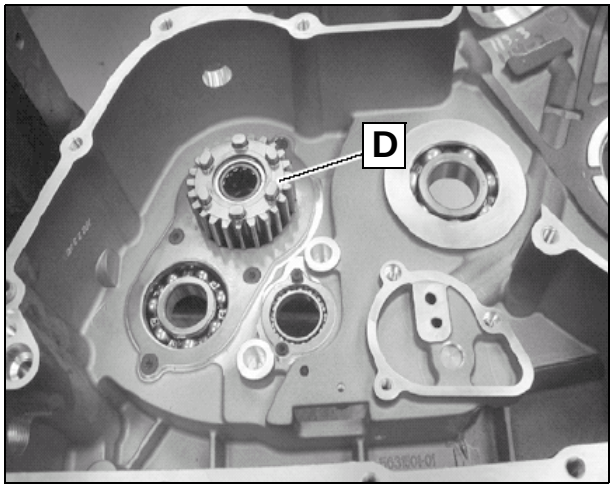

2. Use an arbor press to push clutch shaft out of bearing from clutch side. Support crankcase and protect case mating surface during press operation. Replace bearing if clutch shaft is removed.

© 2009 Polaris Sales Inc.

TRANSMISSION INSPECTION

Refer to exploded views on page 10.8. Standard specifications for shaft and gears are on page 10.9 (main and clutch shaft) and page 10.10 (countershaft).

Shafts

1. Measure outside diameter of shafts in bearing areas for wear and concentricity as shown on page 10.9 and 10.10. Look closely at splines and retaining ring grooves of shafts for wear. Inspect ends of shafts for signs of wear:
   - Dull finish
   - Discoloration
   - Rough or uneven surface
   - Measurement outside of specification

Gears

1. Visually inspect:
   - Gear internal splines (A)
   - Gear teeth (B)
   - Gear dogs (C) for rounding, cracks, chips
   - Gear dog slots (D) for rounding
   - Bearing surfaces (E)
   - Shift fork grooves (F)

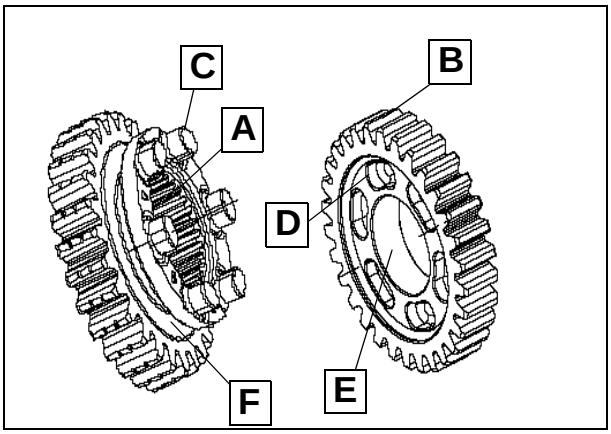

Check each gear for damage, cracks, wear (rounding of dogs or surfaces), or discoloration.

Clutch Shaft Bearings

1. Inspect clutch shaft needle bearings (inside) that support the mainshaft. The clutch shaft should spin freely and smoothly on the mainshaft. The bearings should support the shaft firmly with little or no detectable lateral movement.
2. Replace clutch shaft assembly if bearings are worn or damaged.

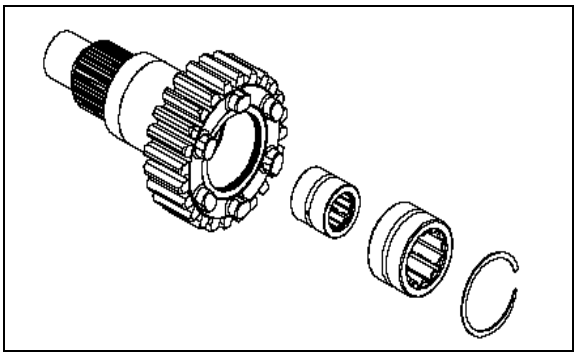

Shift Forks, Shift Fork Rails

Refer to specifications listed on page 10.3 **and** page 10.11**.**

3. Inspect all contact surfaces (A) of each shift fork. Replace a shift fork if any part is discolored (overheated), unusually scored, warped, or worn beyond service limit.
4. Inspect each shift fork pin (B) for wear or damage and compare to specifications.

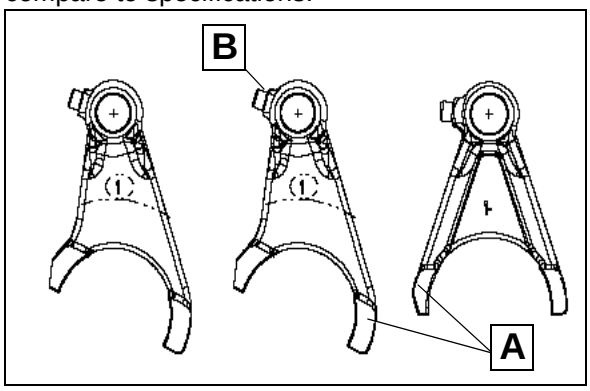

5. Inspect shift fork rails (C) for wear, scoring, or runout.

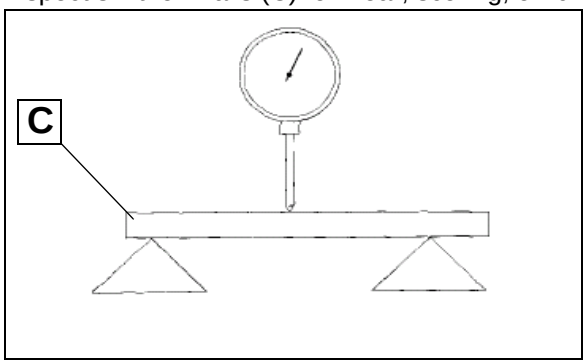

6. Measure shift fork rail O.D. for wear in 3 or 4 places along the length. The rail O.D. should be consistent over the entire length.
7. Slide rails into crankcase holes and check for a good snug fit.

© 2009 Polaris Sales Inc.

8. Visually inspect the shift drum bearing (D) in the left crankcase for wear or damage. The bearing must be fully seated in the case and held in position by the retaining plate. Replace the bearing if it is loose in the bore, or if any side play is detected.

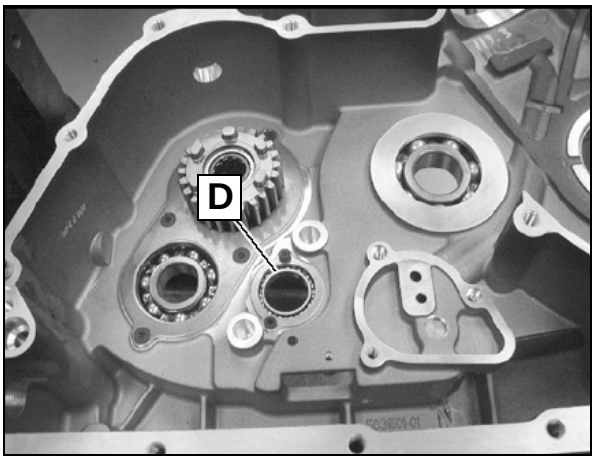

9. Temporarily install shift drum into bearing and rotate, checking for smooth bearing operation. Also, inspect shift drum bearing pin in the right crankcase to ensure it is not loose or worn.

SHIFT DRUM INSPECTION

10. Inspect shift drum grooves (E) for wear. Pay close attention to corners of grooves where forks change direction.
11. Inspect shift drum star alignment pin (F). It should fit tightly in drum and shift star.

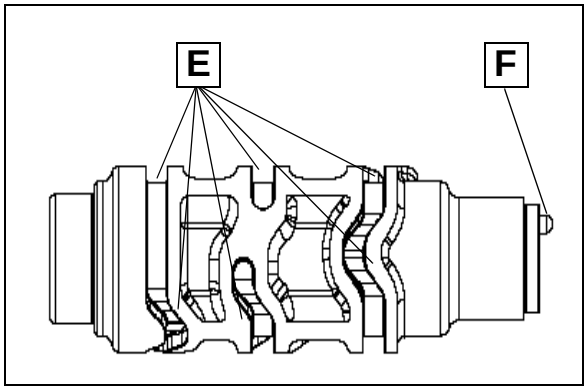

12. Inspect surface of shift drum star for excessive wear or damage.
13. Inspect right side shift drum bearing (G).
14. Temporarily install shift drum in right hand case bearing and inspect fit. Spin drum to check for smooth bearing operation.

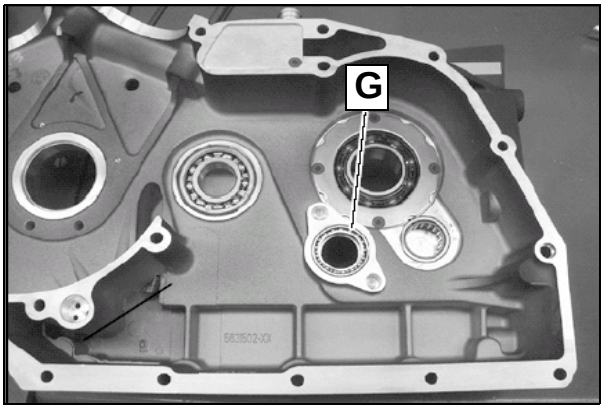

CRANKSHAFT REMOVAL

1. Separate RH crankcase from LH case (page 10.6).
2. Rotate balance shaft (A) until counterweights are clear of crankshaft.

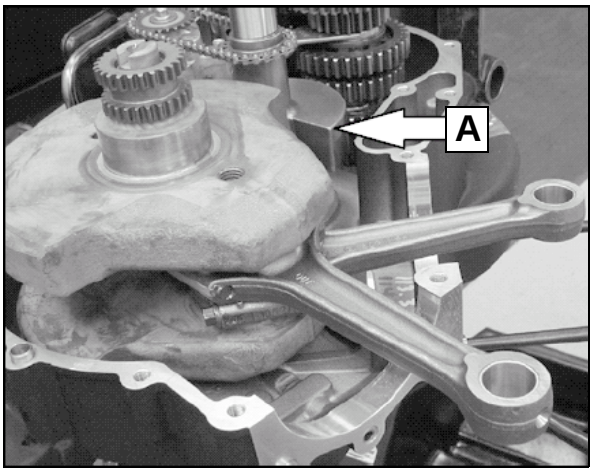

3. Lift crankshaft straight up until clear of case.

NOTE: Connecting rod bearings and main bearings are easily damaged. Be careful not to cause damage to these parts when servicing items within the crankcase.

© 2009 Polaris Sales Inc.

CONNECTING ROD SIDE CLEARANCE INSPECTION

1. Move connecting rods to one side of crankshaft. Insert a feeler gauge between one connecting rod and the crankshaft. Compare measurement to specification on page 10.3.
2. If clearance recorded exceeds service limit, the crankshaft, connecting rod or both must be inspected and worn parts replaced. Refer to crankshaft inspection on page 10.19 and specifications on page 10.3 to determine which part(s) are outside of specifications.

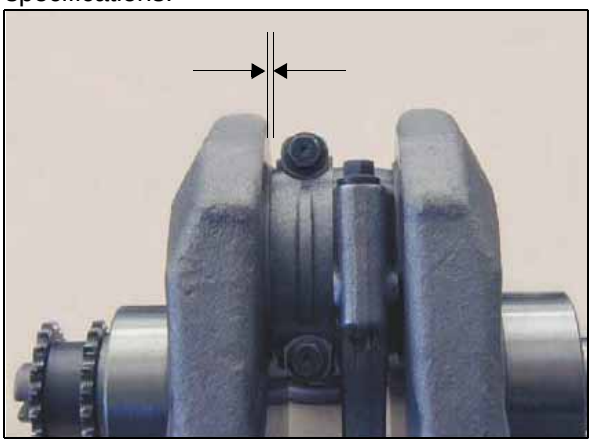

CONNECTING ROD REMOVAL / IDENTIFICATION

NOTE: The connecting rod caps are marked from the factory, however it is recommended that an additional reference mark be added for clarity. Caps are matched to rods and must be installed with the proper orientation. DO NOT strike or stamp the connecting rod.

1. Use a permanent marker to mark orientation of connecting rods and rod bearing caps. These parts must be installed in their original locations. EXAMPLE: Right connecting rod must be assembled to the right with the bearing cap that was removed from it. The bearing cap and connecting rod must be assembled in the same direction as it was removed using the **same bolt.**

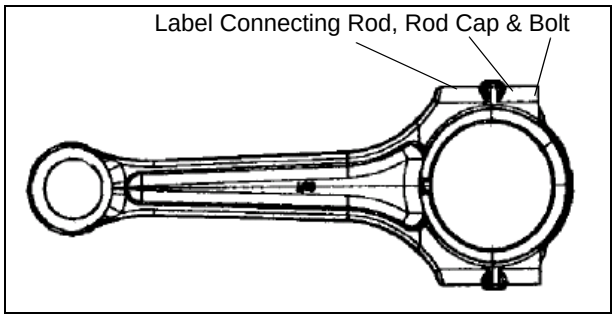

2. Remove connecting rod bolts and connecting rod bearing caps.

NOTE: It may be necessary to lightly tap the caps with a plastic mallet to loosen them.

⚠ CAUTION

The mating surface of connecting rod and cap is rough in appearance, which is a normal condition due to the manufacturing process. If rod caps are installed *incorrectly* and tightened, the precision mating surfaces will be damaged. Replace the connecting rod assembly if mating surfaces are damaged.

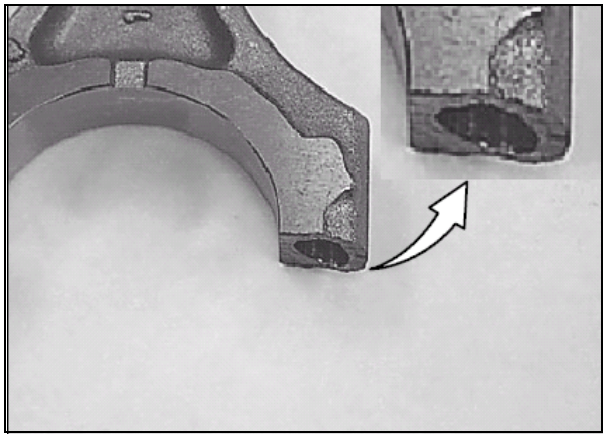

NOTE: Rods are marked OUT as shown in photo. "OUT" must face toward the **left** for the **left** connecting rod and must face toward the **right** for the **right** connecting rod (outside of the engine).

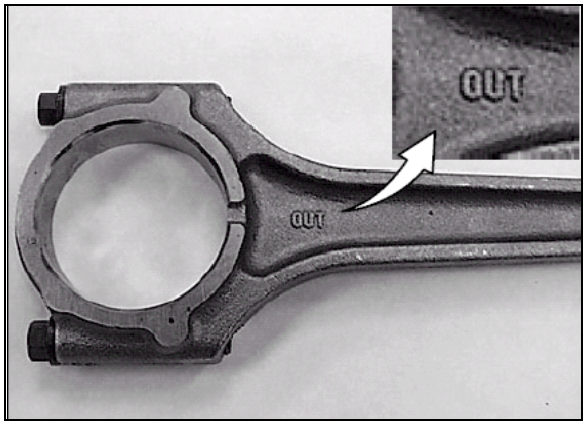

© 2009 Polaris Sales Inc.

CONNECTING ROD INSPECTION (Big end)

1. Refer to page 8.7 for connecting rod small end inspection.

⚠ CAUTION

Be sure to match connecting rod caps with their respective rod and orient the cap properly before installing the cap. Secure the big end of rods in a vise equipped with soft, protective jaws before torquing rod bolts.

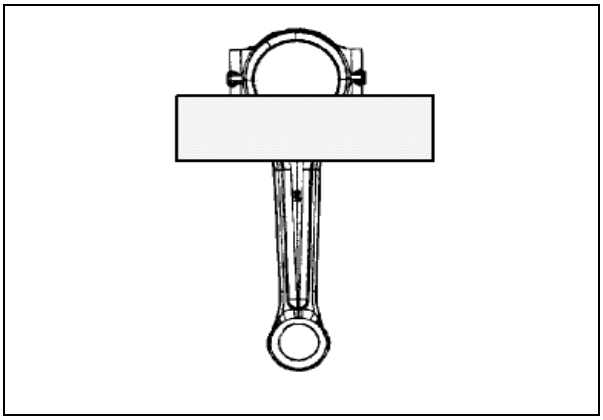

2. Remove bearings and install caps on connecting rods. Be sure mating surfaces (A) of rod and cap are clean.
3. Apply Victory engine oil to threads of rod bolts and nuts. Torque evenly in 2 steps to specification (page 10.19).

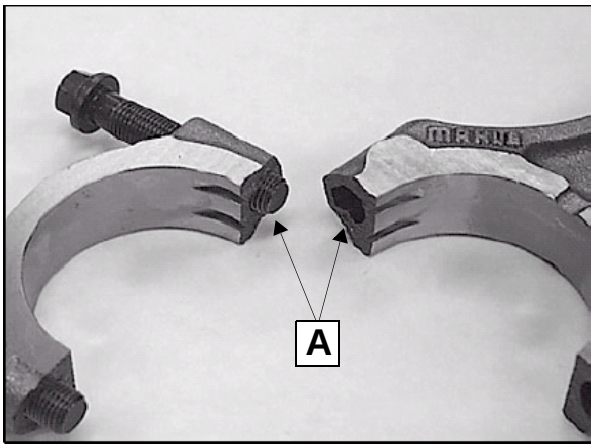

4. Measure I.D. of connecting rod big end for size and out of round. Compare to specifications on page 10.3.

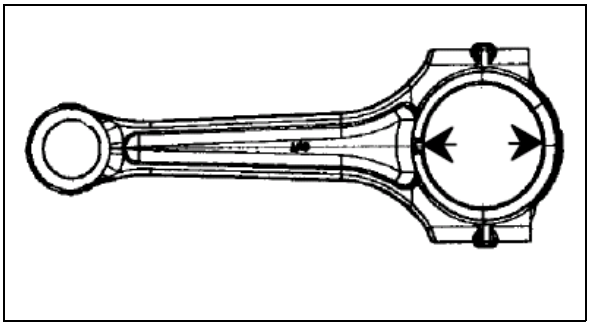

5. Visually inspect connecting rod upper and lower ends for scoring, damage, or excessive wear.

CONNECTING ROD BEARING INSPECTION

1. Inspect bearing inserts for unusual wear, peeling, scoring, damage etc. Replace as a set if damage is noted. Inspect bearing clearance and refer to Bearing Selection Chart (page 10.18).

© 2009 Polaris Sales Inc.

CONNECTING ROD BEARING CLEARANCE INSPECTION (Typical)

1. Assemble the connecting rod cap with bearings and torque to specification below.

TORQUE: Connecting Rod Cap
7 Nm (5 lb-ft) (To Seat Bearing)
55 Nm (40 lb-ft) (Final Torque)

2. Measure the connecting rod big end bearing I.D. with a dial bore gauge and record.

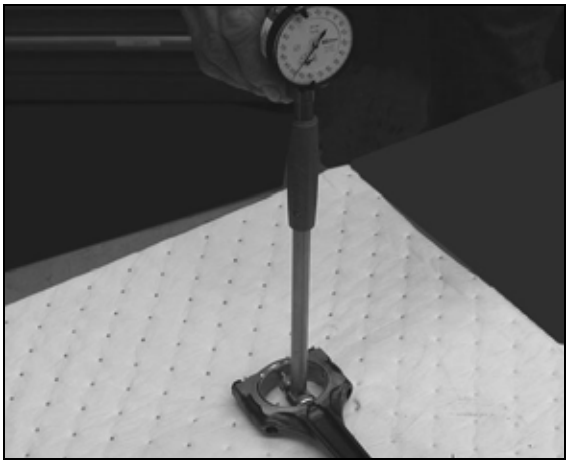

3. Measure the connecting rod journal on crankshaft and record.
4. Subtract the journal diameter from the connecting rod bearing diameter to calculate oil clearance and compare to specification (page 10.3).
5. If service limits are exceeded, install new rod bearings and recheck oil clearance.
6. If service limits are still exceeded, determine if crankshaft or connecting rods need to be replaced.

CONNECTING ROD BEARING SELECTION

1. There are 3 sizes of connecting rod bearings available: Black, Orange and Blue (see chart below).
2. To determine which bearing to use, look at the color code on RH end of crankshaft...

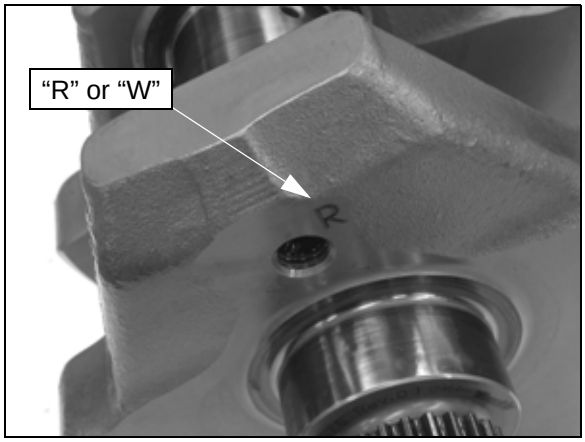

3. ...and the color code on the connecting rod.

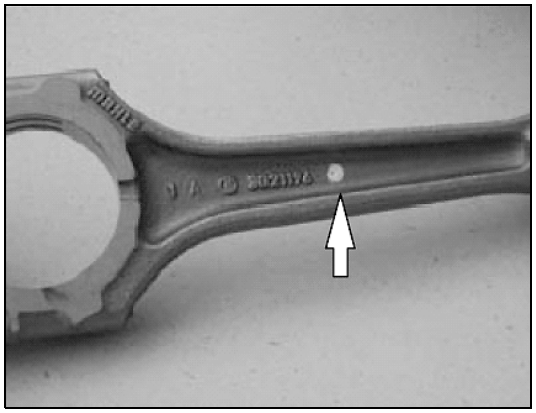

4. Refer to the chart below to select the proper bearing insert.

FOR EXAMPLE: If the CONNECTING ROD paint mark is RED and the CRANKSHAFT stamp is W (white) (or not stamped), use BLUE bearing inserts.

Connecting Rod Bearing Selection Chart		
CON ROD COLOR / CRANKSHAFT	BEARING COLOR (P/N 3514390-**xxx**)	BEARING THICKNESS
WHITE Connecting Rod with **RED ("R" Stamp)** on Crankshaft	Black (**- 067**)	1.409- 1.415 mm
WHITE Connecting Rod with **WHITE** Crankshaft (or not stamped)	Orange (**- 159**)	1.413- 1.419 mm
RED Connecting Rod with **RED** Crankshaft	Orange (**- 159**)	
RED Connecting Rod with **WHITE** Crankshaft (or not stamped)	Blue (**- 027**)	1.417- 1.423 mm

© 2009 Polaris Sales Inc.

CRANKSHAFT INSPECTION

Record all measurements and compare to specifications on page 10.3. Replace crankshaft if any measurement is worn beyond the service limit.

1. Measure the width of the rod bearing journal.

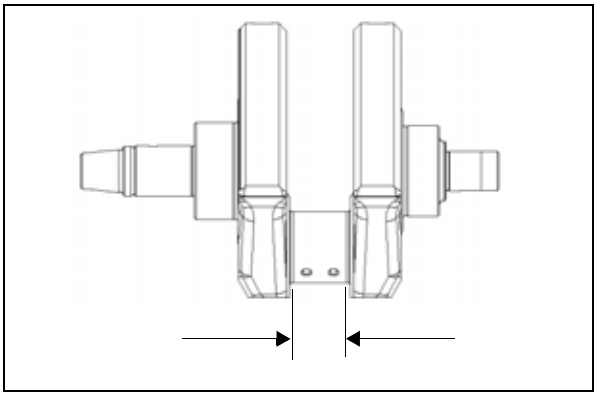

2. Measure width of connecting rods at big end.

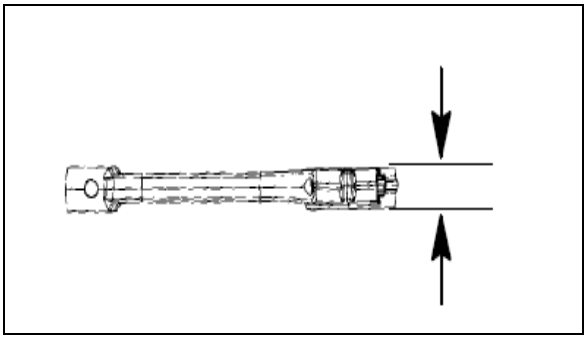

3. Visually inspect all bearing journals for scoring, damage or excessive wear.
4. Crankshaft and connecting rods are identified by color. Be sure to compare measurements to specification on page 10.3 for the proper color (or non-marked) connecting rod or crankshaft.

Measure O.D. of crankshaft rod journal in four places and compare to specifications.

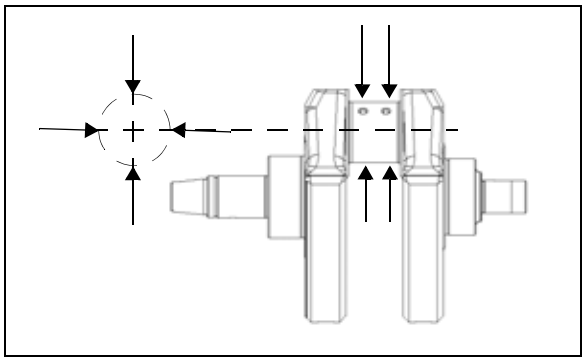

5. Measure O.D. of main bearing journals.

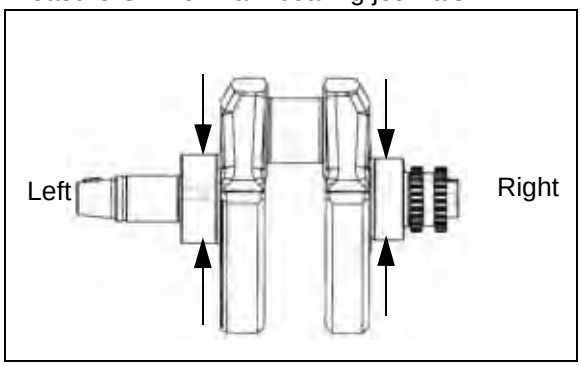

CONNECTING ROD INSTALLATION

1. Make sure proper bearing clearance is achieved by using the correct colored bearing insert for a given color combination of connecting rod and crankshaft.
2. Clean all oil off connecting rod, connecting rod cap and bearing inserts.
3. Install bearing inserts into connecting rods and caps. First, install bearing tab into groove, then press the rest of the bearing into place.

NOTE: Procedure during disassembly called for marking of connecting rods and caps. Ensure that each part is installed in original location including rod cap bolts.

4. Apply assembly lube to connecting rod bearings and crank pin.

Moly Assembly Paste PN: 2871460

5. Install rods and caps onto the crankshaft, observing the "OUT" mark on the connecting rods. "OUT" must face toward the **left** for the **left** connecting rod and must face toward the **right** for the **right** connecting rod (outside end of crankshaft). Be sure the I.D. marks made previously are aligned.

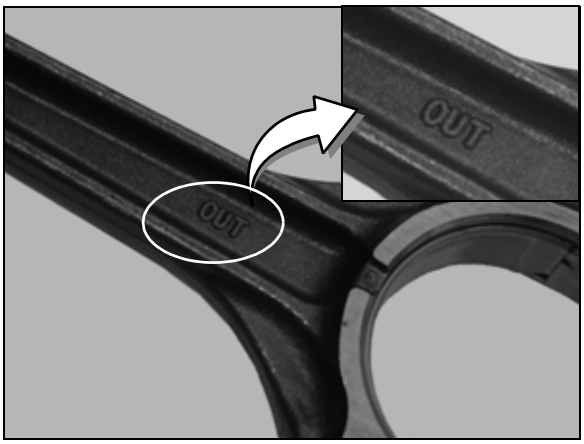

© 2009 Polaris Sales Inc.

6. Tighten rod cap bolts:
   - To 7 Nm (5 lb-ft) to seat caps and bearings.
   - Tighten to specification in two steps.

TORQUE: Connecting Rod Cap
7 Nm (5 lb-ft) (To Seat Bearing)
55 Nm (40 lb-ft) (Final Torque)

7. Check that the connecting rods rotate smoothly and freely on crankshaft journal.
8. If a connecting rod or crankshaft was replaced, re-measure side clearance (A) to be sure it is within specification listed on page 10.3 before assembly.

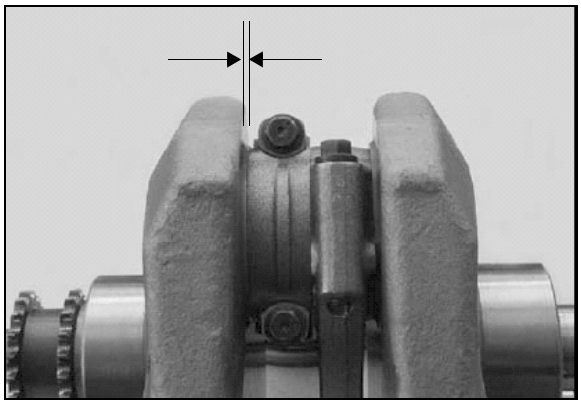

CRANKSHAFT CLEANING

1. Remove blind plugs from crankshaft to ensure that all passages are clear.

⚠ CAUTION

Blind plugs are installed with Loctite™ 262. Use localized heat (such as a soldering gun) when removing blind plugs.

Plug: Loctite™ 262
20 Nm (15 lb-ft.)

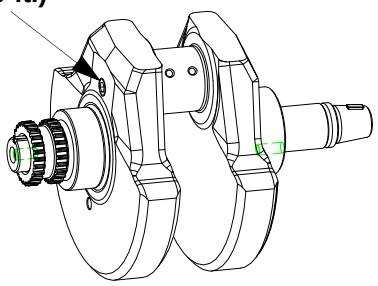

2. After cleaning passages, apply Loctite™ 262 to blind plug threads and install plugs into crankshaft to specified torque. Plug should be flush with surface of crankshaft.
3. Install woodruff key(s). Install drive and alignment pins.

MAIN BEARING INSPECTION

1. Inspect crankcase main bearing surfaces for wear, peeling, scoring, or damage.
2. Inspect alignment of bearing lubrication hole (A) in left crankcase half or (B) in right case half. Holes must be aligned with their respective oil passage in crankcase.

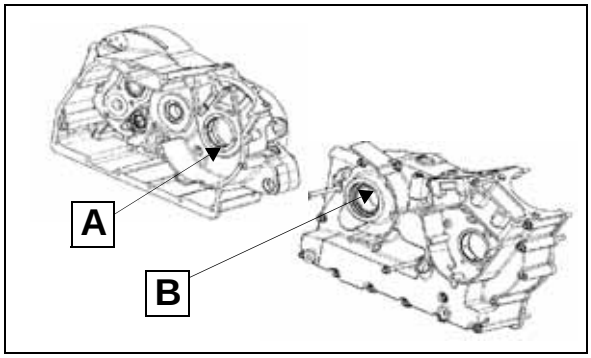

MAIN BEARING OIL CLEARANCE INSPECTION

1. Measure main bearing I.D. and concentricity with a dial bore gauge for right and left side. Compare to specification (page 10.3). Subtract crankshaft main journal diameter from main bearing diameter to calculate oil clearance.

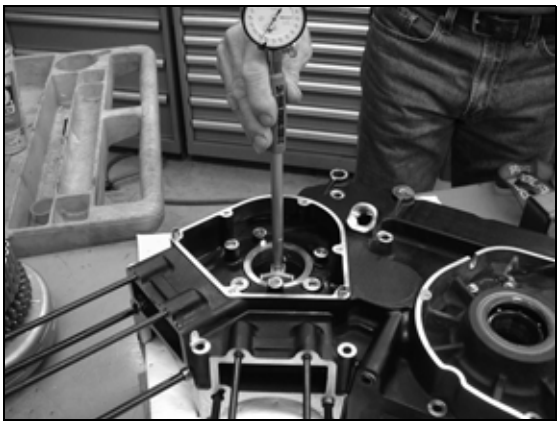

2. If crankshaft dimensions are within tolerances and oil clearances are incorrect, the crankcase set must be replaced or new main bearings installed and line-honed by a competent machinist.

NOTE: Replace crankcase halves as a set.

© 2009 Polaris Sales Inc.

LEFT CRANKCASE ASSEMBLY

Prepare LEFT crankcase for assembly:

Refer to exploded view on page 10.4 for torque values, bearing press depth, and locking agent.

1. Clean crankcase and oil passages (A) thoroughly. Rinse and dry with compressed air.

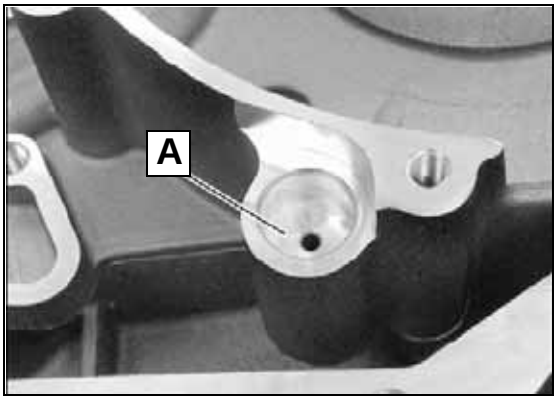

- Install new bearings in crankcase as required.
- Apply a film of lithium grease to outer race of bearings to prevent galling upon installation.
- Press on outer race of bearings using an arbor press and a suitable arbor that is slightly smaller than bearing outside diameter.
- DO NOT press on inner race of ball bearings.

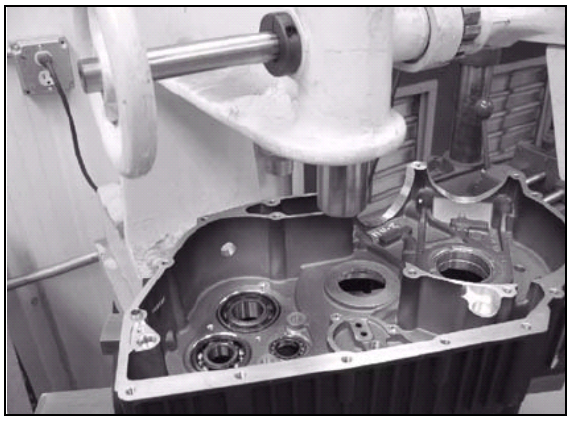

2. Press balance shaft bearing from the primary side using an arbor press (B).

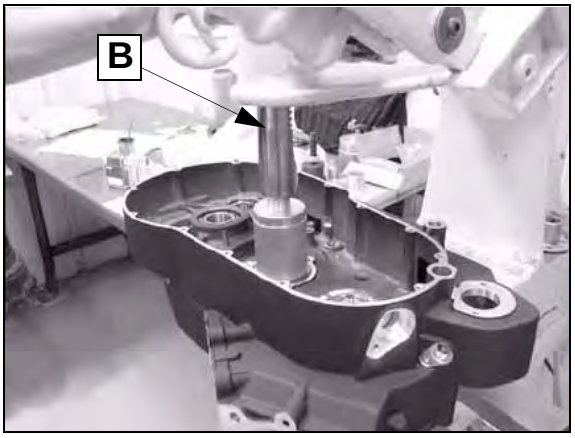

CLUTCH SHAFT INSTALLATION

3. Place clutch shaft support tool press plate on clutch side of crankcase to support inner race of bearing. Clutch shaft is a firm press-fit in bearing, and bearing damage may result if inner race is not supported during the press operation.

Special tool:
Clutch Shaft Bearing Support: PV-47331

4. Press clutch shaft until fully seated using an arbor press (A). Check for smooth, quiet operation after shaft is installed.

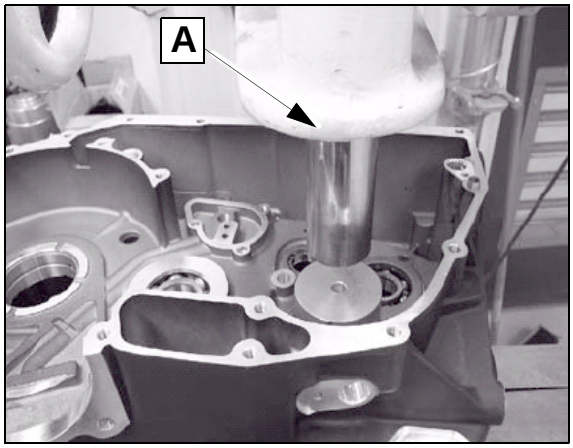

© 2009 Polaris Sales Inc.

RIGHT CRANKCASE ASSEMBLY

Prepare RIGHT crankcase for assembly:

Refer to exploded view on page 10.4 for torque values, bearing press depth, and locking agent.

1. Clean crankcase oil passages (B) thoroughly. Rinse and dry with compressed air.

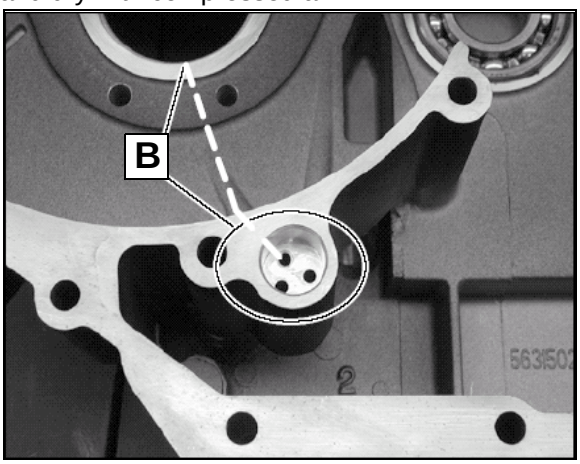

- Install new bearings in crankcase as required.
- Apply a film of lithium grease to outer race of bearings to prevent galling upon installation.
- Press on outer race of bearings using an arbor press and a suitable arbor that is slightly smaller than bearing outside diameter.
- DO NOT press on inner race of ball bearings.

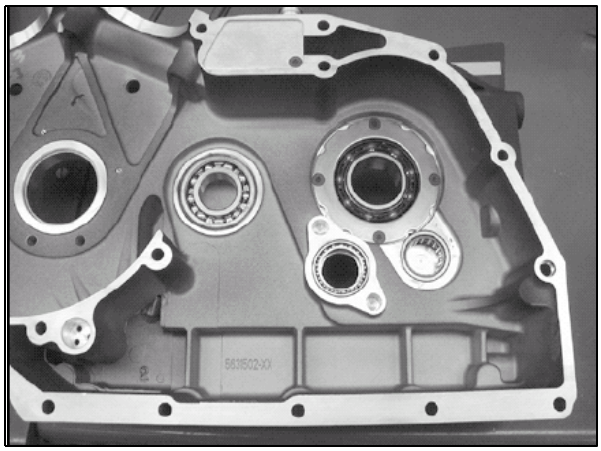

2. If main bearings are replaced, they must be line-honed with the left side crankcase to proper finished size. Press operation and fitting must be performed by a qualified machinist.

CRANKCASE REED VALVE ASSEMBLY REMOVAL & INSPECTION

1. Separate engine cases (page 10.6).
2. Remove the retaining screws for the reed valve assembly. Remove breather valve assembly.
3. Inspect the reed valve for bending, pitting, or other damage at the sealing surface that would prevent a good seal.
4. Replace the reed valve as necessary.

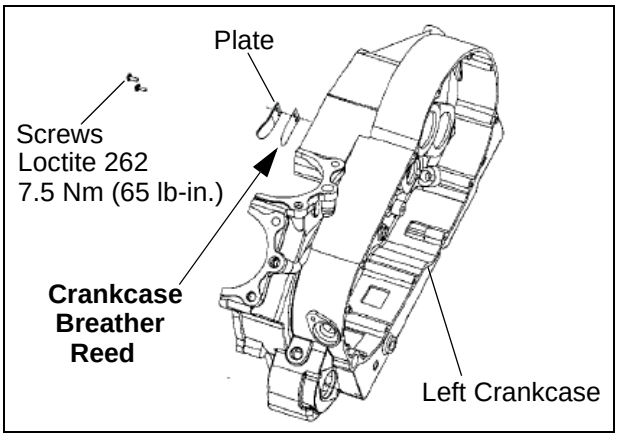

CRANKSHAFT INSTALLATION

NOTE: Install left engine case onto an engine stand.

1. Apply assembly paste to main bearings.

Moly Assembly Paste PN: 2871460

2. Hold crankshaft over left crankcase and position rods so that left side rod is in cutout for rear cylinder and right side rod is in cutout for the front cylinder.
3. Place crankshaft into left crankcase half.

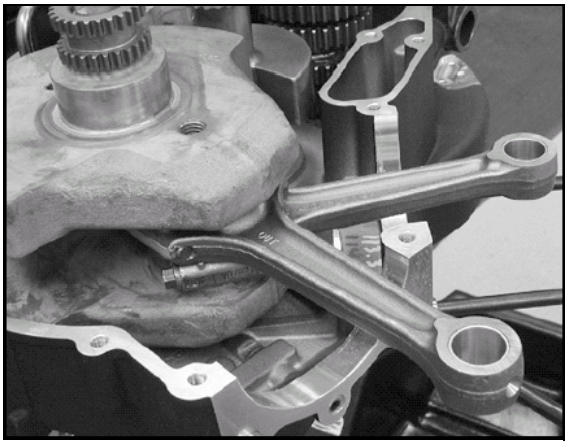

© 2009 Polaris Sales Inc.

TRANSMISSION INSTALLATION

1. Be sure all bearing retainer plate screws are installed and tightened to specification (page 10.4).
2. Be sure clutch shaft (A) is fully seated in bearing.

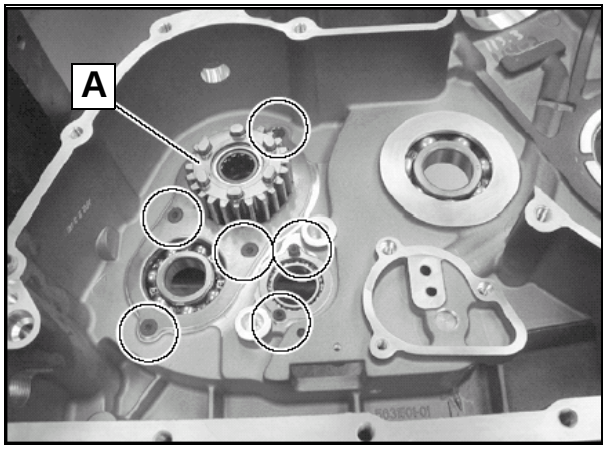

3. Lubricate parts with Victory engine oil. Apply Moly Assembly Paste (PN 2871460) to ends of transmission shafts.
4. Install shift drum, countershaft, and mainshaft into the left crankcase. Hold mainshaft 4th gear on shaft during assembly. Make certain both shafts are fully seated and rotate freely.
5. Install shift forks in grooves of sliding gears. The two mainshaft forks are identical.
6. Install shift rails through forks.
7. Rotate shift drum to align proper grooves with forks.

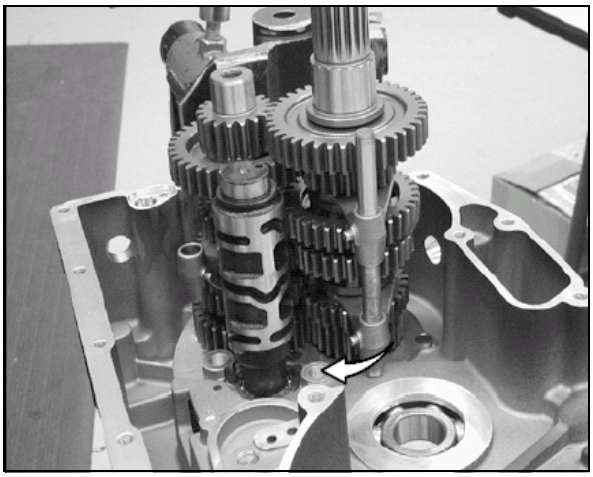

8. Move shift fork pins into drum grooves and seat rails.
9. Photo shows transmission installed and shift forks engaged; shift rails seated.

At this point, test the transmission by shifting through the gears while rotating the shafts. Test operation in each gear to ensure transmission works properly before proceeding.

NOTE: Shift transmission into 5Th gear for crankcase assembly

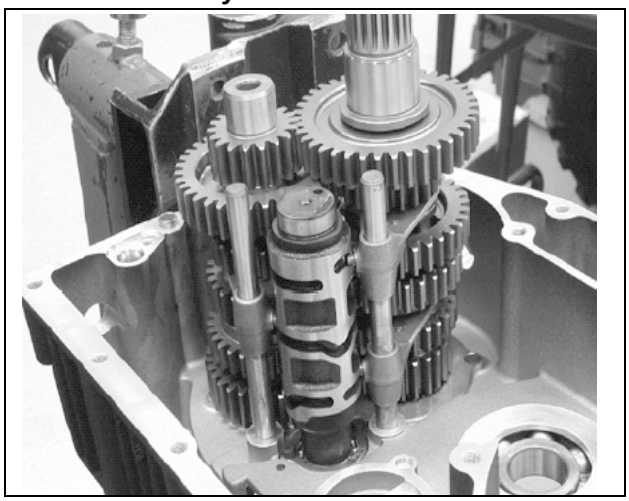

10. Install balance shaft, oil pump with pipes (Chapter 4), and crankshaft (page 10.22) if removed.
11. Refer to Crankcase Assembly on page 10.25.

© 2009 Polaris Sales Inc.

BALANCE SHAFT

BALANCE SHAFT REMOVAL & INSPECTION

1. Remove bolt (A) from oil pump drive sprocket. Use engine lock tool between balance shaft weight and crankcase to hold shaft.

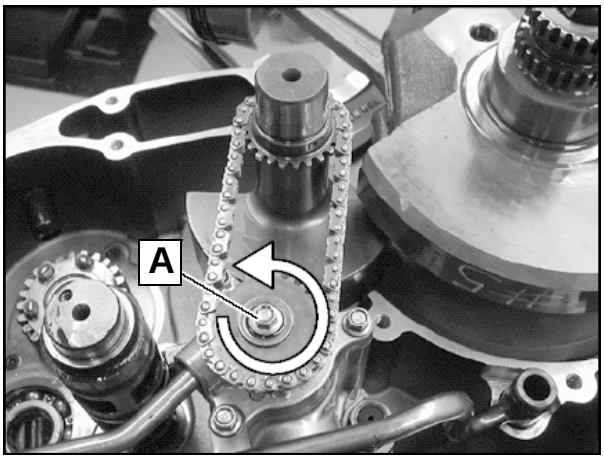

2. Remove sprocket & chain from oil pump.
3. Remove chain from balance shaft sprocket.
4. Rotate balance shaft until counterweights are clear of crankshaft. Grasp balance shaft and remove it from case.
5. Inspect sprocket teeth for wear or damage.
6. Check shaft for runout, or twisting.
7. Rotate right and left balance shaft bearings by hand while observing bearing rotation. Bearings should run smooth and quiet and shaft should be a snug fit in bearing.
8. Visually inspect bearings for damage.

BALANCE SHAFT INSTALLATION

1. Lubricate balance shaft bearings with engine oil.
2. Insert threaded end of shaft into left crankcase bearing.
3. Install oil pump drive chain onto balance shaft.
4. Install chain and sprocket onto oil pump shaft. Align flats to seat sprocket.

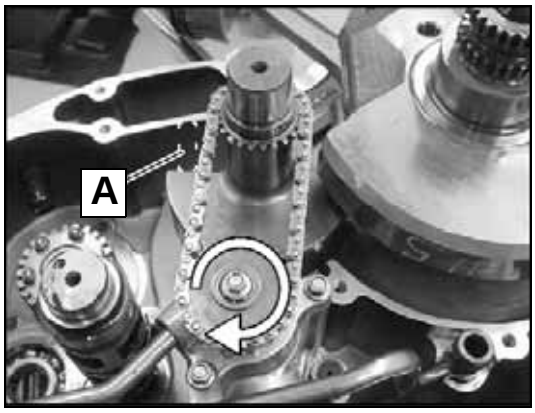

5. Install engine lock tool between balance shaft weight and crankcase (A) to lock balance shaft.
6. Install oil pump sprocket bolt and torque to specification.

TORQUE:
9.6 Nm (85 in-lb)

© 2009 Polaris Sales Inc.

CRANKCASE

CRANKCASE ASSEMBLY & SEALING

NOTE: Place transmission is in 5th gear prior to crankcase assembly.

1. Clean crankcase mating surfaces to remove all grease, oil, and old sealant.
2. Check to be sure all shafts are seated, and that all (new) O-rings, alignment dowel pins, oil pipes, etc. are in place.
3. Install the clutch shaft holding tool PV-45028.

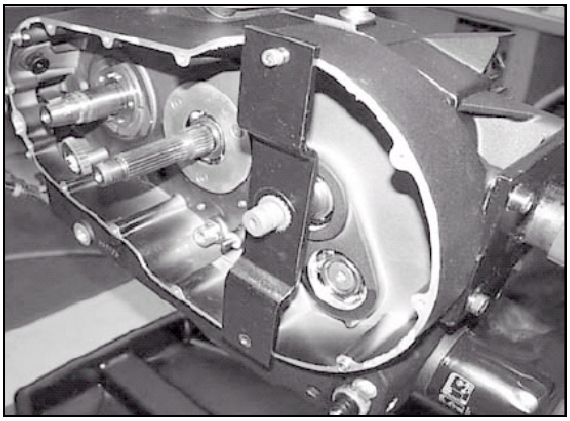

4. Apply an even bead of Loctite™ Ultra Black 598 to entire case sealing surface.
5. Spread out sealer into a thin even layer on entire case mating surface. Be sure all areas are covered. DO NOT ALLOW SEALANT TO DRY. CONTINUE ASSEMBLY UNTIL CASES ARE SEALED AND ALL BOLTS ARE TIGHT.

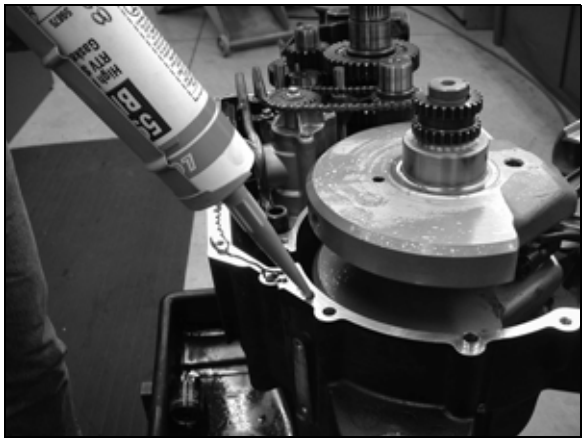

6. Install crankshaft bearing protector over the cam chain drive sprocket

Special Tool: Crankcase Bearing Protector PV-47207

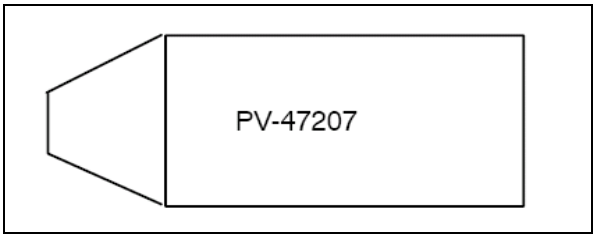

7. Assemble the Crankcase Installation Tool as shown at right. PVX-47429 is required if seal sleeve is not installed on output shaft.

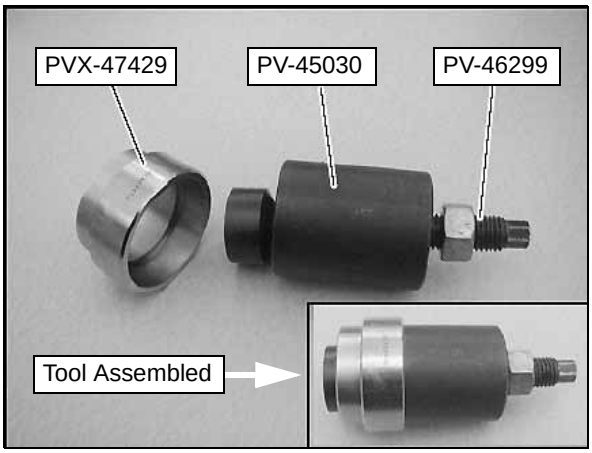

© 2009 Polaris Sales Inc.

8. Install crankcase installation tool onto the output shaft.

9. Pull crankcase together by tightening nut and tapping on crankcase with a soft mallet.

NOTE: The cases will mate before the mainshaft is drawn fully into bearing. IMPORTANT! Continue to turn nut and tap case and apply approximately 102-136 Nm (75-100 lb-ft.) torque to the nut).

10. Remove the tool.

11. Install crankcase bolts with starter motor as shown below.

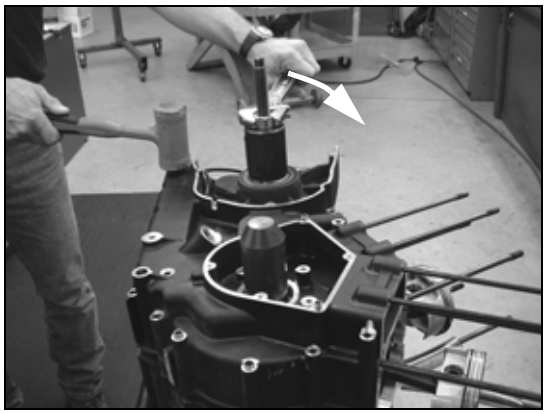

12. Tighten crankcase bolts in two steps following the sequence shown below. Repeat the final torque.

TORQUE: Crankcase Bolts
(2 steps) 20 / 30 Nm (15 / 22 lb-ft) then repeat the 30 Nm (22 lb-ft.) torque

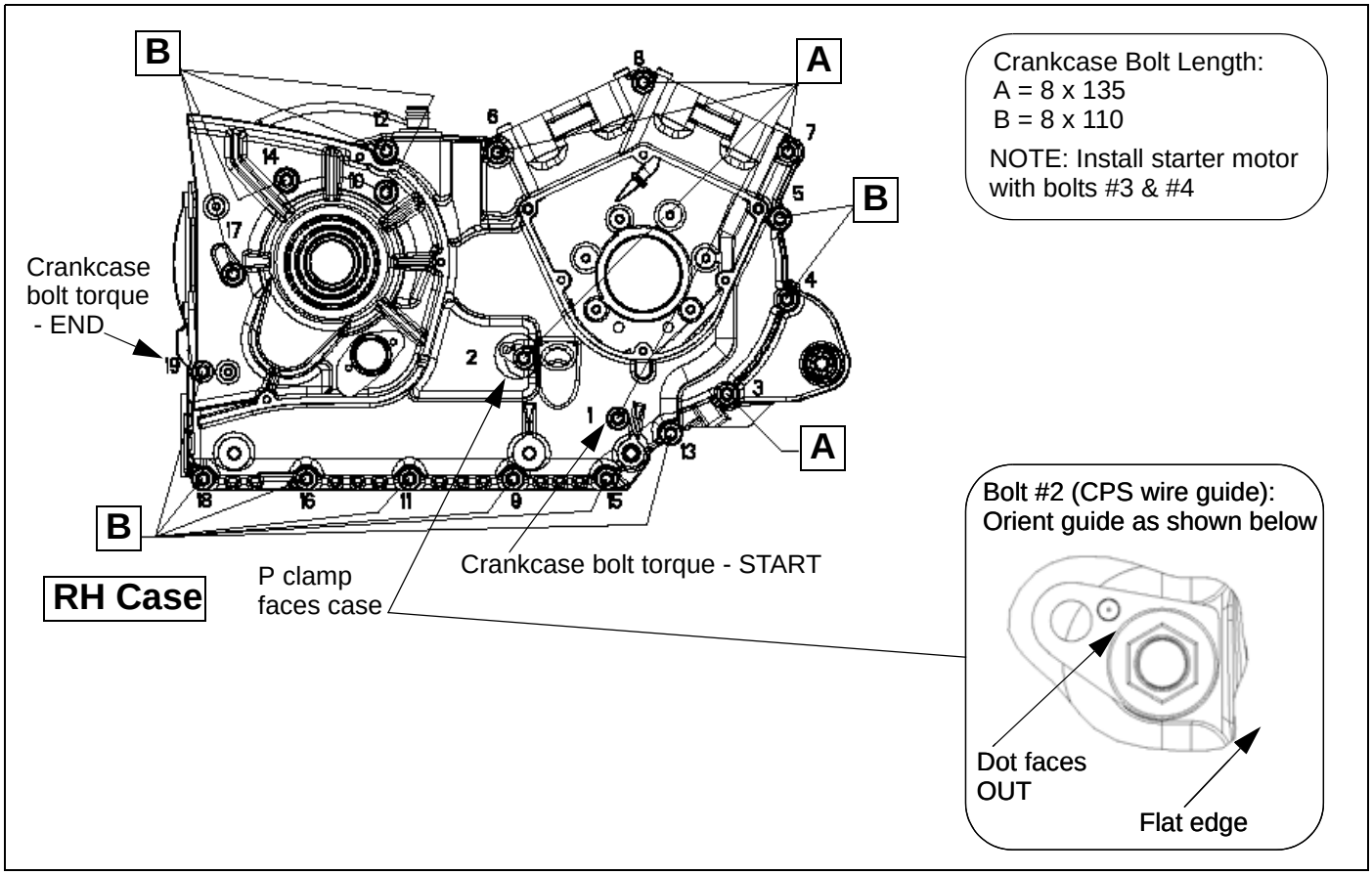

© 2009 Polaris Sales Inc.

13. Clean threads of countershaft and bolt with Loctite™ Primer N. Apply 2 drops of Loctite™ 262 to threads of countershaft bolt or use a new bolt with pre-applied locking agent. Install bolt with washer (A) and tighten to specified torque.

TORQUE: Countershaft Bolt

34 Nm (25 lb-ft.)

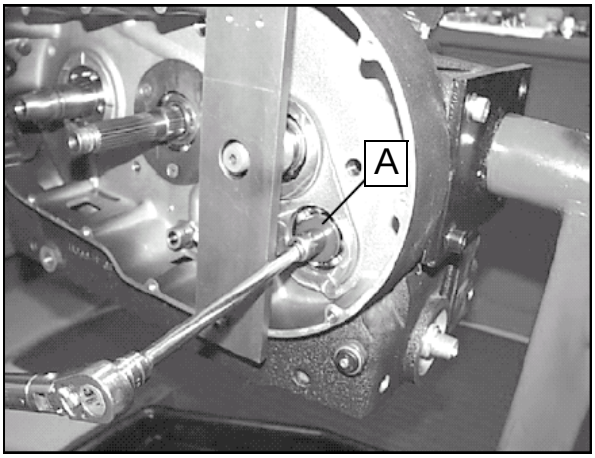

14. Remove tool from shaft and assemble shift mechanism, primary drive, and primary cover. Refer to Chapter 9.
15. Install a new mainshaft (output) seal in RH crankcase using seal installer.

Special tool:

Final Drive Seal Installer PV-43505

16. Inspect output shaft seal sleeve for burrs, nicks, or surface wear. The surfaces that contact bearing race and drive sprocket must be smooth and flat to prevent loosening of the drive sprocket.
17. Install O-ring (B), seal sleeve (C) with tapered edge toward O-ring, and drive sprocket.

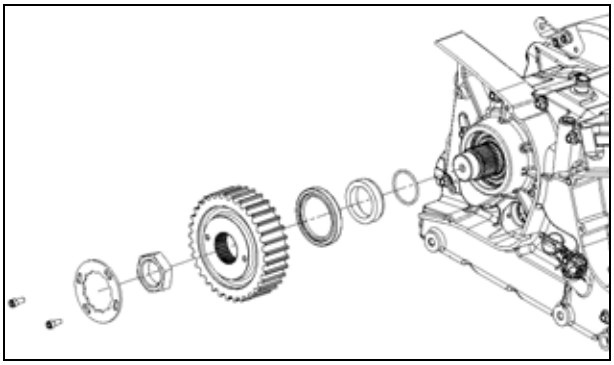

NOTE: Use an 8mm or a 5/16 diameter pin punch in timing hole and shift transmission into 1st gear to hold crankshaft while tightening sprocket nut.

TORQUE: Drive Sprocket Nut

244 Nm (180 lb-ft.)

Loctite 262

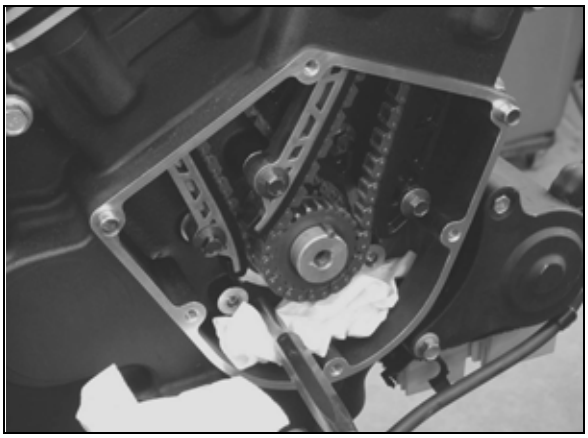

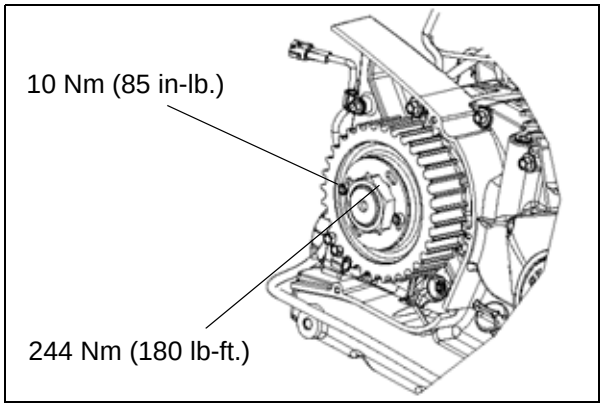

18. Install lock plate screws.

NOTE: The lock plate can be installed in many positions and either side of the plate can be used. If you cannot find a position that will work, flip the plate over and again try to install it. If the plate still does not align, tighten the sprocket nut slightly and try to fit the lock plate again.

19. Rotate the plate CLOCKWISE until it stops and hold it firmly against the nut.
20. Tighten the lock plate screws to specified torque.
21. Install CPS timing wheel.

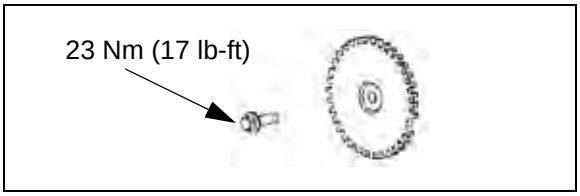

© 2009 Polaris Sales Inc.

TROUBLESHOOTING

TROUBLESHOOTING

PROBLEM	POSSIBLE CAUSE	PART(s) AFFECTED	REPAIR RECOMMENDED
Transmission Will Not Shift	Broken Shift Cam	Shift Cam	Replace shift cam
	Bent Shift Forks	Shift Fork	Replace shift fork(s)
	Worn Gearshift Pawl	Shift Cam	Replace shift cam
	Broken Gears	Transmission Gears	Replace necessary parts
	Damaged/Broken Bearings	Transmission, Shift Cam Bearings	Replace necessary parts
	Worn Gear Shift Ratchet Mechanism	Shifter Ratchet	Refer to chapter 9
	Broken or out-of-place spring on shift ratchet	Shift Ratchet Spring	Refer to chapter 9
	Shift Detent Plunger Stuck	Shift Detent Plunger	Repair as necessary
	Frozen Pivot Point, Bent External Shift Linkage	External Shift Linkage	Repair as necessary
	Bent or Distorted Shift Fork Rails	Shift Fork Rails	Replace Shift Fork Rails
	Debris From Broken Parts Locking Transmission	Transmission Components	Repair as necessary
Excessive Noise Related to Bottom End of Engine	Worn Main Bearings	Crankshaft and/or Crankshaft Bearings	Repair as necessary
	Worn Connecting Rod Bearings	Connecting Rod Bearings and/or Connecting Rod and/ or Rod Bearings	Repair as necessary
	Worn Connecting Rod Small End Bushing	Connecting Rod, Connecting Rod Bushing, Piston Pin, Piston	Repair as necessary
	Worn, seized, chipped or broken gear teeth	Transmission Gears	Repair as necessary
	Worn, seized, chipped or broken Transmission Bearings	Transmission Bearings	Repair as necessary
	Originates from Primary Cover	Clutch, Torque Compensator, Flywheel, Starter Drive Assembly, Starter Clutch, Starter Motor	Refer to chapter(s) 9, 16, 17, 18
	Oil Pump	Oil Pump, Oil Pump Drive	Refer to chapter 4
	Cam Drive	Cam Chain, Cam Sprocket	Refer to chapter 7

© 2009 Polaris Sales Inc.

PROBLEM	POSSIBLE CAUSE	PART(s) AFFECTED	REPAIR RECOMMENDED
Transmission Hard to Shift	Improper Clutch Operation	Clutch	Refer to chapter 9
	Incorrect Oil Viscosity	Engine oil and filter	Refer to chapter 3
	Incorrect Clutch Adjustment	Clutch Adjustment	Refer to chapter 3
	Bent, Rubbing, Sticky, Broken Shift Shaft	Shifter Ratchet Assembly	Refer to chapter 9
	Sticking Pivot Point, Bent External Shift Linkage	External Shift Linkage	Repair or replace components as necessary
	Bent or Distorted Shift Forks	Shift Forks	Replace bent shift fork
	Damaged Shift Drum Grooves	Shift Drum	Replace damaged shift drum
	Shift Detent Plunger Stuck	Shift Detent Plunger	Repair as necessary
	Bent or Distorted Shift Fork Rails	Shift Fork Rails	Replace Shift Fork Rails
Transmission Jumps Out of Gear	Broken Shift Stop Pin	Shift Stop Pin	Replace stop pin
	Worn Shift Drum Pawls or Shifter Ratchet	Shift Drum or Shift Linkage	Replace damaged shift drum or shifter ratchet
	Broken Shift Ratchet Spring	Shift Ratchet Spring	Replace spring
	Damaged Shift Drum Grooves	Shift Drum	Replace shift drum
	Bent, Worn, Distorted Shift Forks	Shift Forks	Replace shift forks
	Bent or Distorted Shift Fork Rails	Shift Fork Rails	Replace shift fork rails
	Worn Engagement Dogs on Transmission Gears	Transmission Gears	Replace necessary parts

© 2009 Polaris Sales Inc.

NOTES

© 2009 Polaris Sales Inc.

CHAPTER 11
DRIVE LINE / REVERSE SYSTEM

SPECIAL TOOLS 11.2
DRIVE LINE SPECIAL TOOLS. 11.2
ASSEMBLY VIEWS & TORQUE VALUES 11.2
REAR WHEEL FASTENER TORQUES 11.2
DRIVE SPROCKET FASTENER TORQUES 11.3
BELT GUARD / FASTENER TORQUE 11.4
DRIVE BELT 11.5
BELT INSPECTION 11.5
BELT REMOVAL 11.5
BELT INSTALLATION 11.5
DRIVE SPROCKET 11.5
DRIVE SPROCKET AND SEAL REMOVAL. 11.5
DRIVE SPROCKET INSPECTION 11.6
DRIVE SPROCKET AND SEAL INSTALLATION. 11.6
REAR SPROCKET 11.8
REAR SPROCKET REMOVAL: 2008. . . . . 11.8
REAR SPROCKET INSPECTION: 2008 . . . . . 11.8
REAR SPROCKET INSTALLATION: 2008. . . . . 11.8
REAR SPROCKET REMOVAL: 2009-2010 . . . . . 11.9
REAR SPROCKET INSPECTION 11.9
REAR SPROCKET INSTALLATION: 2009-2010 . . . . . 11.9
REVERSE SYSTEM (2009 - 2010 IF EQUIPPED) 11.10
REVERSE DRIVE MECHANISM 11.10
REVERSE GEAR CASE ASSEMBLY VIEW 11.11
REVERSE LINKAGE ADJUSTMENT. 11.12
REVERSE SYSTEM TEST. 11.13
REVERSE COUPLER SHAFT KEY REPLACEMENT 11.13
TROUBLESHOOTING. 11.14
TROUBLESHOOTING 11.14

© 2009 Polaris Sales Inc.

SPECIAL TOOLS

DRIVE LINE SPECIAL TOOLS

Output Shaft Seal Installation Tool: PV-43505A
8mm (5/16″) Pin Punch (to hold crankshaft for drive sprocket removal / installation): Commercially available
Torque Wrench with 250 Nm (185 lb-ft.) range: Commercially available

⚠ CAUTION

Some drive line repair or maintenance involves supporting the machine with the rear end elevated. Take precautions so that the motorcycle is securely supported when the tire is off the ground. This reduces the possibility of personal injury or damage to the motorcycle.

- Replace belt and sprockets as a set if the drive system has been in service for 5000 miles or more (8000 Km).
- Refer to Chapter 2 for **MAINTENANCE** of drive belt.
- Refer to Chapter 14 for **TIRE REMOVAL, REPAIR, & BALANCING**.
- Refer to Chapter 15 for **BRAKE SYSTEM** service and repairs.

ASSEMBLY VIEWS & TORQUE VALUES

REAR WHEEL FASTENER TORQUES

All surfaces and fasteners must be clean, dry, and oil free before assembly.
See Chapter 13 for Rear Wheel Removal / Installation.

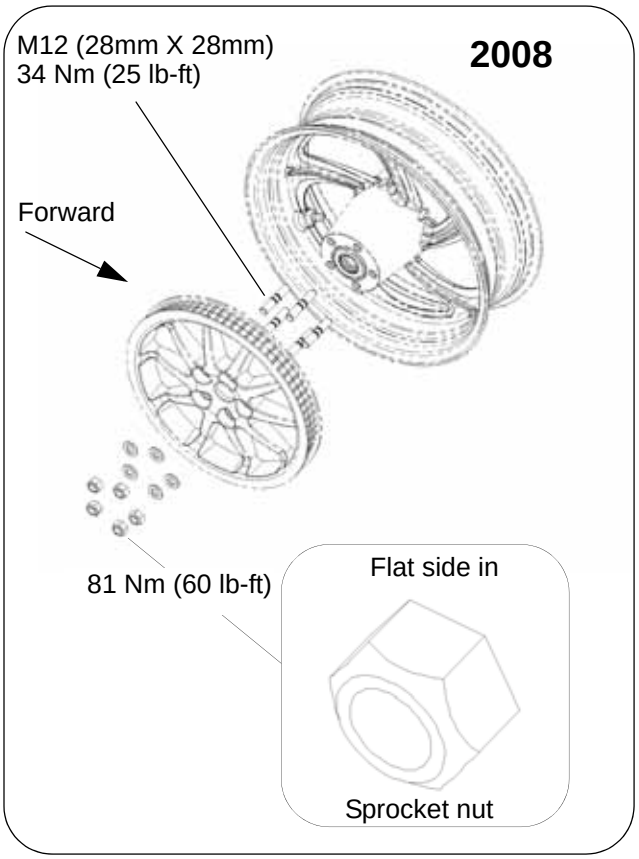

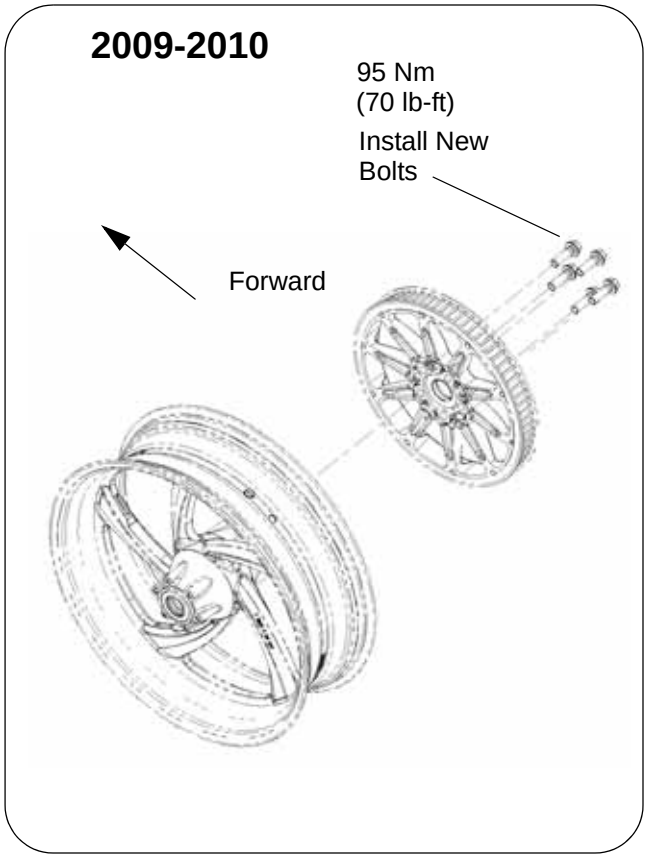

© 2009 Polaris Sales Inc.

DRIVE SPROCKET FASTENER TORQUES

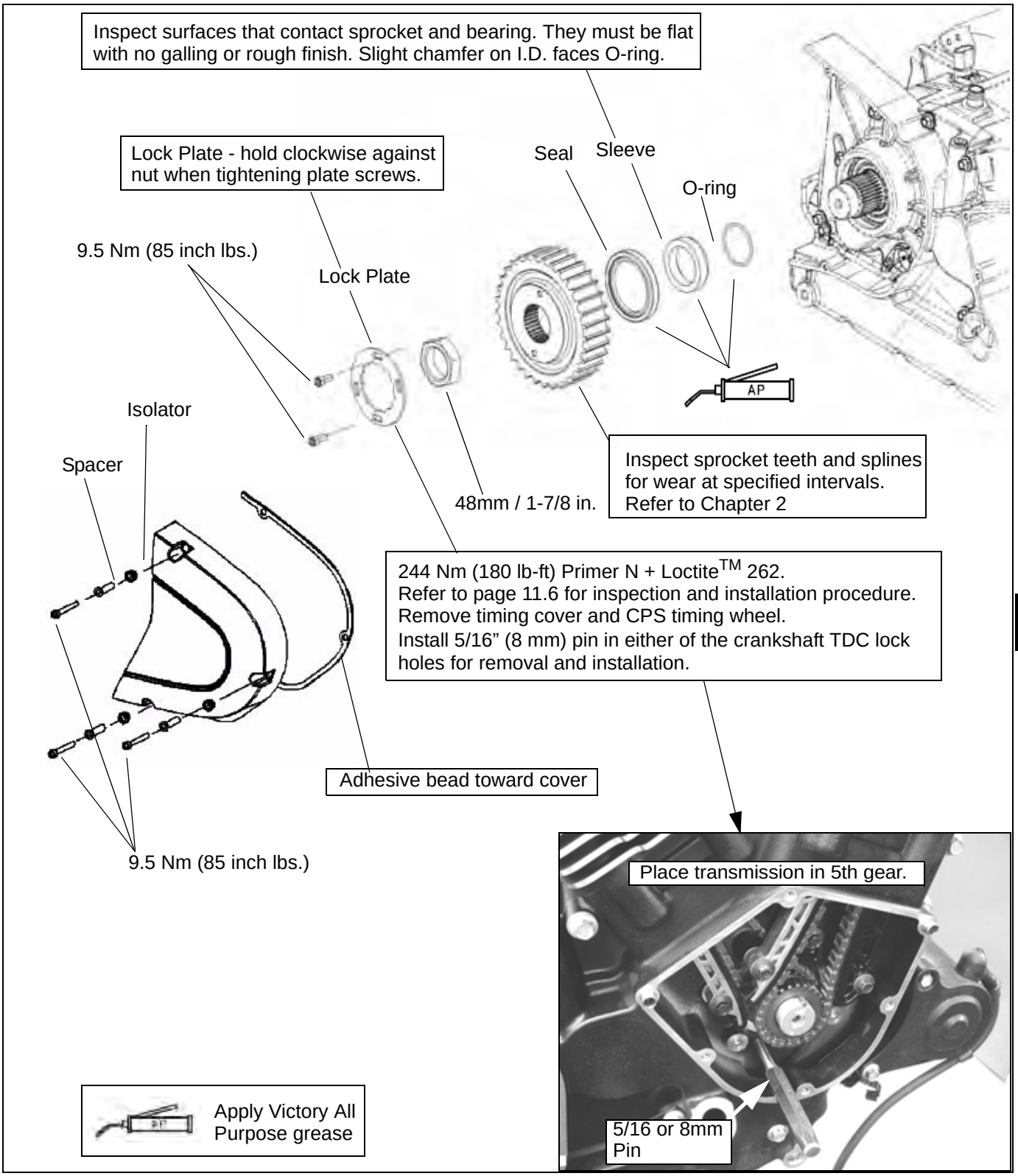

11

© 2009 Polaris Sales Inc.

BELT GUARD / FASTENER TORQUE

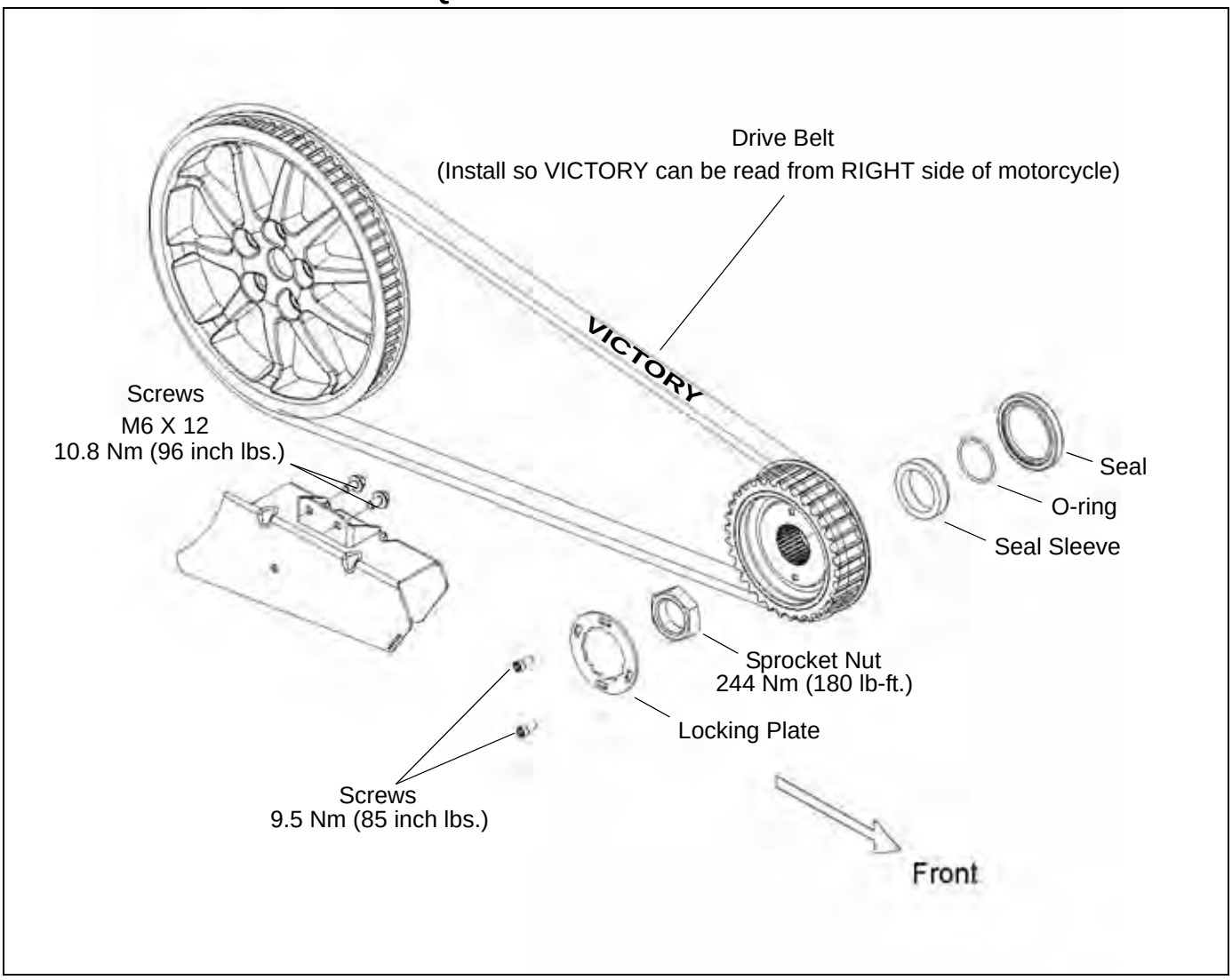

© 2009 Polaris Sales Inc.

DRIVE BELT

BELT INSPECTION

1. Refer to Chapter 2 for belt inspection procedures.
2. Inspect belt tension and adjust if necessary. Refer to chapter 2.
3. If one or more components are damaged, replace belt and both sprockets as a set if the drive system has been in service for 5000 miles (8000 Km) or more.

BELT REMOVAL

NOTE: If you plan to remove the front sprocket, refer to Drive Sprocket Removal located in this chapter.

NOTE: If belt is to be reinstalled, always mark the direction of rotation on the outer surface of belt. Reinstall belt in same direction as it was removed.

WARNING

A mis-aligned rear axle can cause drive line noise and damage the drive belt, which could cause belt failure and loss of control of the motorcycle.

WARNING

Care should be taken to be sure the motorcycle will not tip or fall while elevated. Severe personal injury or death may occur if the motorcycle tips or falls.

1. Secure motorcycle front wheel in a stand.
2. Place a jack underneath the engine and lift until the rear tire is not resting on the surface.
3. Remove the right and left mufflers (Chapter 3).
4. Remove the right side floorboard assembly:
   - *Care must been take to prevent damage to brake lines.*
   - *Support floor board assembly to allow brake line to hang freely with out tension.*
5. Remove rear exhaust crossover mounting bolt. Bolt is located at rear of lower right-side engine case.
6. Remove head pipe nuts and flange at cylinder heads.
7. Remove right side rear tip-over protection.
8. Loosen rear wheel axle nut and loosen adjusters an equal amount of turns.
9. Remove front sprocket cover. Rotate head pipes outward to gain access to front sprocket cover bolts.
10. Remove drive belt from motorcycle.

BELT INSTALLATION

1. Inspect sprockets and verify sprocket fasteners are tight.
2. Place belt onto drive sprocket and rear sprocket.
3. Install drive sprocket cover. Torque fasteners to specification (page 11.3).
4. Adjust belt tension and verify proper alignment as required in Chapter 2. Torque rear wheel axle nut to specification. Refer to Chapter 13.
5. Install exhaust and right rear tip-over protection. Refer to Chapter 3.
6. Install right floorboard.

DRIVE SPROCKET

DRIVE SPROCKET AND SEAL REMOVAL

1. Refer to the belt removal instructions in this chapter.
2. Remove drive sprocket cover and gasket.
3. Remove sprocket lock plate screws (A) and lock plate.

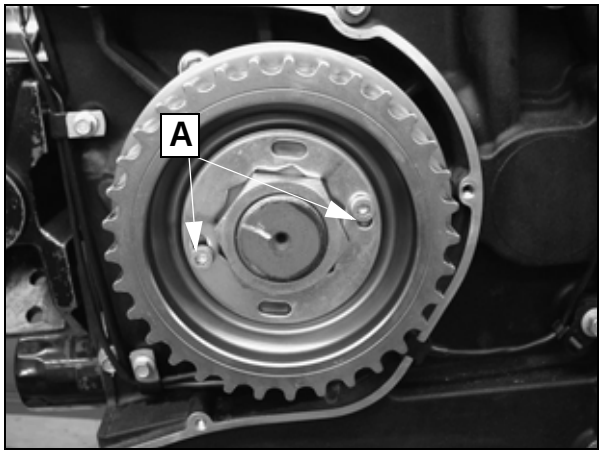

4. Place transmission in 5th gear.
5. Remove right side lower timing cover and CPS timing wheel.

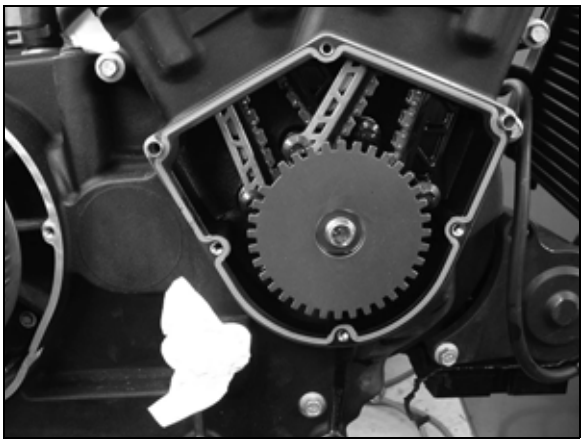

© 2009 Polaris Sales Inc.

6. Rotate crankshaft (arrow) using Crankshaft Rotation Socket PV-48736 until key way is aligned with one of the TDC holes in crankcase.

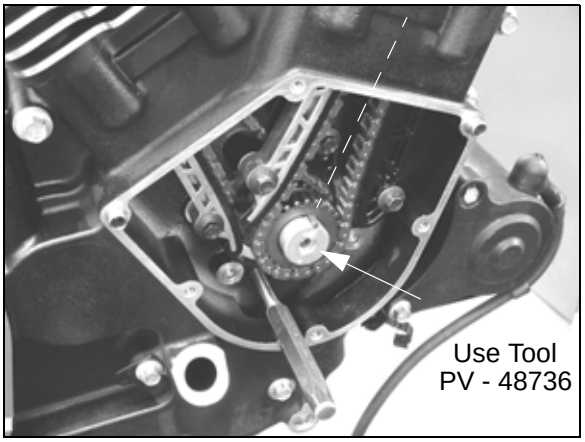

7. Insert an 8mm or 5/16″ diameter pin into crankcase hole and into crankshaft to hold shaft while loosening sprocket nut.
8. Remove sprocket nut.
9. Loosen rear axle nut.
10. Loosen axle adjuster screw lock nut.
11. Loosen both axle adjuster screws evenly to move wheel forward until belt is loose.
12. Pull belt off sprocket.
13. Remove front sprocket, spacer, and O-ring from output shaft.
14. If required, remove the shaft seal using a suitable tool.

DRIVE SPROCKET INSPECTION

1. Visually inspect sprocket teeth (A) for excessive wear, foreign material damage.

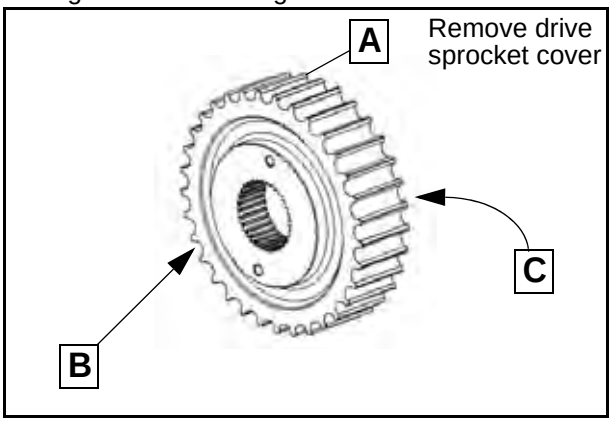

2. Inspect splines (B) for a tight fit on output shaft splines.
3. Inspect the back surface of sprocket hub (C) where it contacts the seal sleeve. Replace if worn or if surface is rough.

NOTE: Sprockets and belt normally exhibit a polished appearance due to normal operation. Belt replacement is not required unless uncharacteristic damage is noted, or if the mileage service interval is reached. Belt or sprocket damage is usually due to debris trapped between belt and sprocket, or from improper maintenance and adjustment.

4. Inspect outer surface (D), inner surface (E), and sealing surface (F) of seal sleeve. Surfaces must be flat without wear or galling. Replace the sleeve if worn, or if the surface appears rough or chafed. The O-ring sealing surface of slightly chamfered edge must be smooth to seal the shaft.

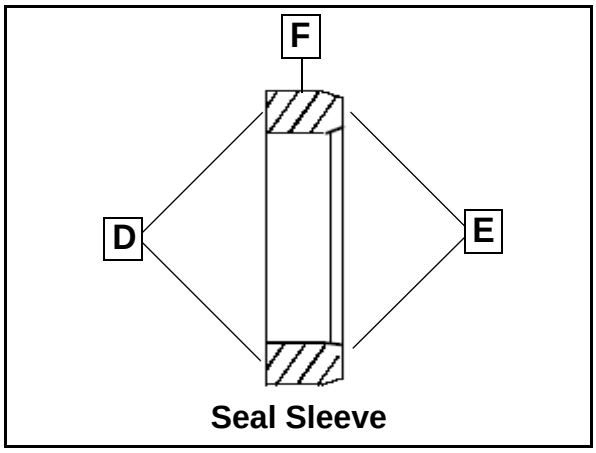

DRIVE SPROCKET AND SEAL INSTALLATION

1. Apply grease to a new O-ring (G) and install on output shaft.
2. Install the shaft seal (if removed) using special tool PV - 43505A

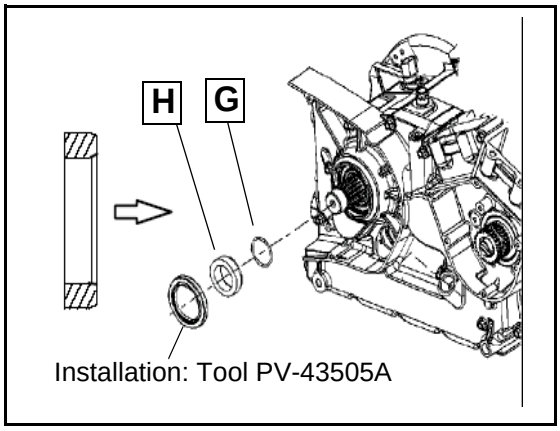

3. Install seal sleeve (H) with the chamfer on inside diameter of sleeve facing in, toward O-ring.

© 2009 Polaris Sales Inc.

4. Clean shaft threads and sprocket nut to remove all previous thread locking agent and apply Loctite™ Primer N.

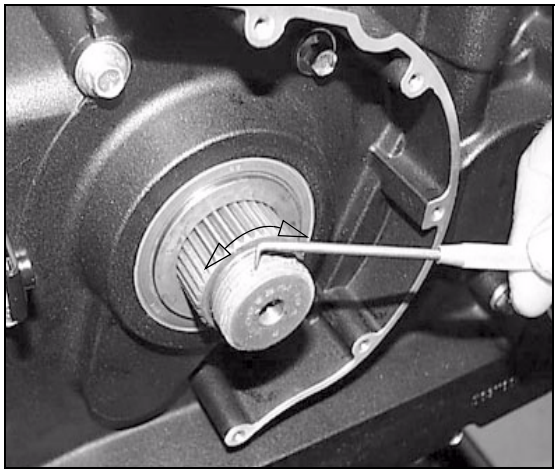

5. Apply a light film of anti-seize compound to splines of shaft. Place belt onto front sprocket, place sprocket over splines of output shaft.
6. Apply Loctite™ 262 to threads of shaft and nut.
7. Install drive sprocket nut.

NOTE: If primary side is ***disassembled***, shift transmission into 5th gear and install clutch shaft holding tool PV-45028 on the clutch shaft to tighten sprocket nut.

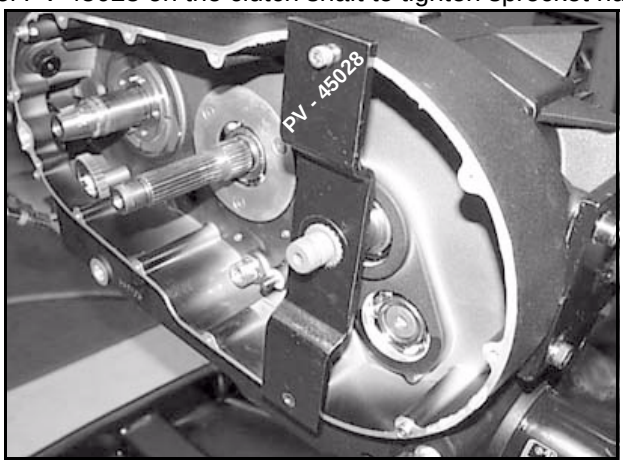

NOTE: If primary side is ***assembled***, follow instructions to hold shaft as described for *Drive Sprocket Removal* in this chapter.

8. Torque nut to specification.

Drive Sprocket Nut Torque:
244 Nm (180 lb-ft.)
Loctite™ 262

9. Install lock plate.

NOTE: The lock plate can be installed in many positions and either side of the plate can be used. If the plate still does not align, tighten sprocket nut slightly and try to fit the lock plate again.

10. Install lock plate screws (A).
11. Rotate the plate CLOCKWISE (B) until it stops and hold it firmly against the nut.

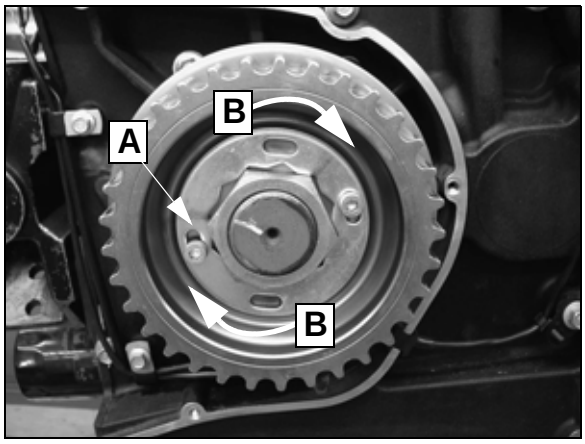

12. Tighten the lock plate screws to 9.5 Nm (85 lb-in).
13. After belt installation, adjust belt tension and wheel alignment as instructed in Chapter 2.
14. Install drive sprocket cover with a new gasket (adhesive side of gasket faces cover). Torque cover screws to 9.5 Nm (85 lb-in).

Sprocket Cover Bolt Torque:
9.5 Nm (85 inch lb.)

15. Complete the exhaust installation as outlined in Chapter 3. Torque all fasteners to specification.

© 2009 Polaris Sales Inc.

REAR SPROCKET

REAR SPROCKET REMOVAL: 2008

1. Remove rear wheel (Chapter 13) and set spacer aside.
2. Loosen all sprocket nuts evenly in a star pattern and remove nuts and washers.
3. Remove sprocket.

CAUTION

Protect brake disc surface while working.

REAR SPROCKET INSPECTION: 2008

1. Visually inspect the sprocket teeth (A) for excessive wear, foreign material damage due to road debris between sprocket and belt, bent or cracked flanges, and cracks of any kind.
2. Visually inspect sprocket hub (B) for cracks or damage.

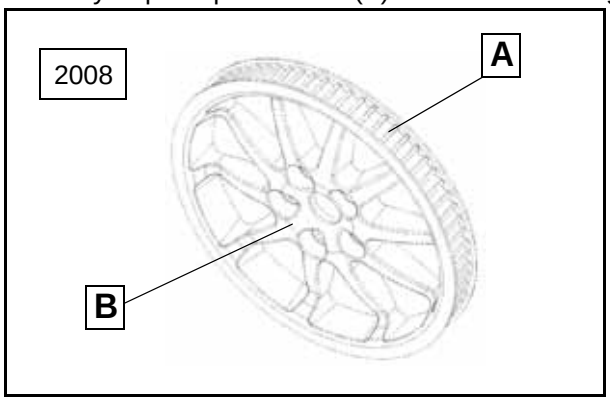

3. Visually inspect wheel studs (C) for wear or looseness in the hub. Mounting flange on wheel and sprocket must be flat and clean.

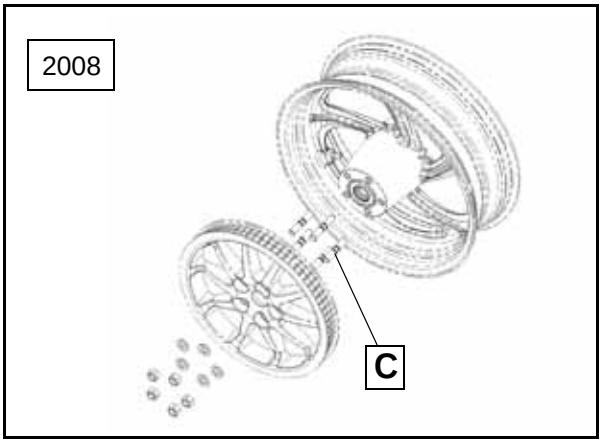

NOTE: Sprockets and belt normally exhibit a polished appearance due to normal operation. Belt replacement is not required unless uncharacteristic damage is noted, or if the mileage service interval is reached. Most often, belt or sprocket damage is due to foreign debris getting between belt and sprocket, or from improper maintenance or adjustment.

4. Inspect wheel hub and sprocket mating surfaces for galling, roughness, or cracks. Surface must be flat, with no burrs or surface irregularities.
5. Clean threads of wheel studs to remove any residual locking agent, dirt, oil, or grease.

REAR SPROCKET INSTALLATION: 2008

1. Clean sprocket stud threads to remove all grease or oil residue.
2. Clean mating surfaces of wheel and sprocket.
3. Install sprocket over studs.
4. Install washers and nuts. Torque nuts in a star pattern to specified torque.

Rear Sprocket Nut Torque (2008): 81 Nm (60 lb-ft)

5. Refer to Chapter 13 for rear wheel installation procedure.

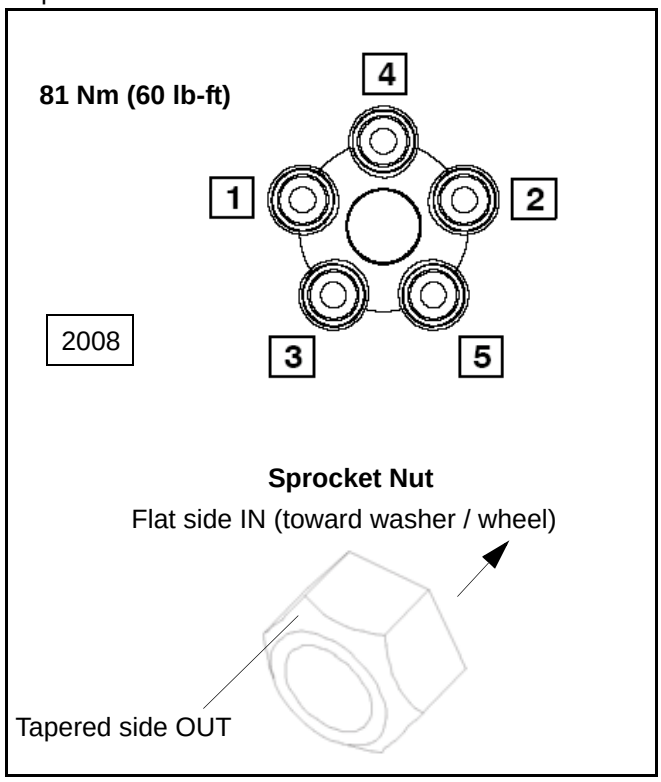

© 2009 Polaris Sales Inc.

REAR SPROCKET REMOVAL: 2009-2010

1. Remove rear wheel (Chapter 13).
2. Loosen all sprocket bolts evenly in a star pattern and discard.
3. Remove sprocket.

CAUTION

Protect brake disc surface while working on wheel.

REAR SPROCKET INSPECTION

1. Visually inspect sprocket teeth for excessive wear and damage from foreign material or road debris. Inspect hub (B) for cracks or damage.

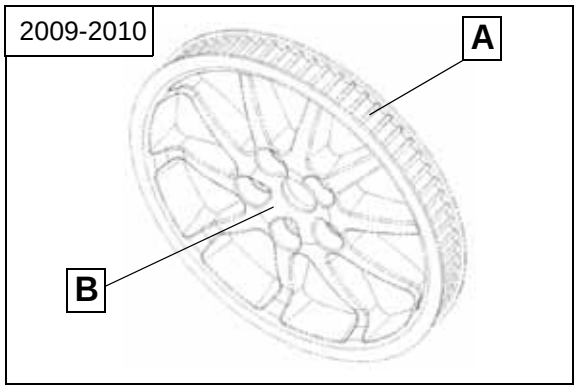

2. Visually inspect sprocket mounting surface (C) on wheel for wear.

NOTE: If the drive system has been in service for 5000 miles or more, replace both front and rear sprockets along with the belt if any one item is damaged or worn beyond a normal polished appearance. Refer to the Periodic Maintenance Table in chapter 2 for drive system replacement interval.

3. Inspect sprocket mating surface (D) for galling, roughness, or cracks. Surface must be flat, with no burrs or surface irregularities.

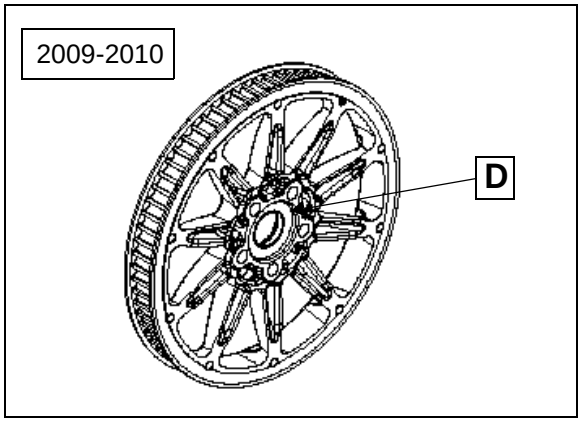

REAR SPROCKET INSTALLATION: 2009-2010

1. Clean sprocket bolt threads in hub to remove all grease or oil residue.
2. Clean mating surfaces of wheel and sprocket.
3. Install sprocket with new bolts. Do not re-use sprocket bolts.
4. Torque bolts in a star pattern to specified torque.
5. Install rear wheel (Chapter 13).

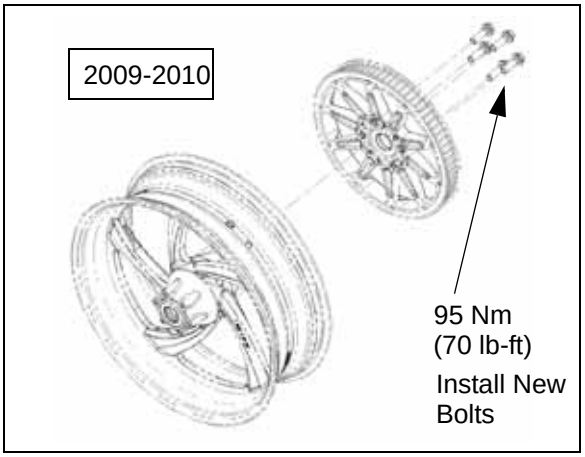

© 2009 Polaris Sales Inc.

REVERSE SYSTEM (2009 - 2010 IF EQUIPPED)

REVERSE DRIVE MECHANISM

NOTE: See page 19.40 for reverse electrical system function, component location, and diagnostics. Maintenance (reverse idler shaft lubrication) is on page 2.7.

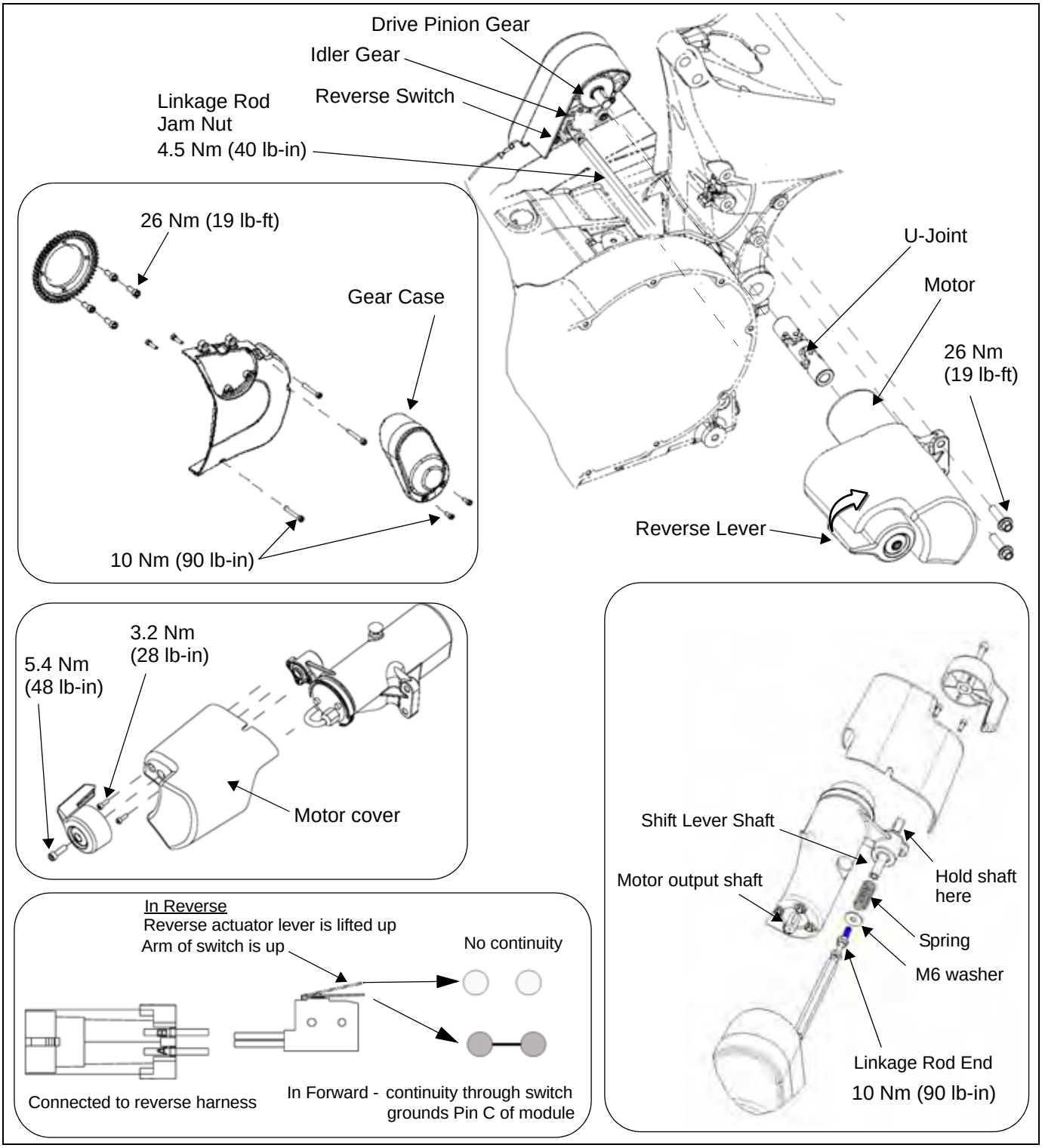

© 2009 Polaris Sales Inc.

REVERSE GEAR CASE ASSEMBLY VIEW

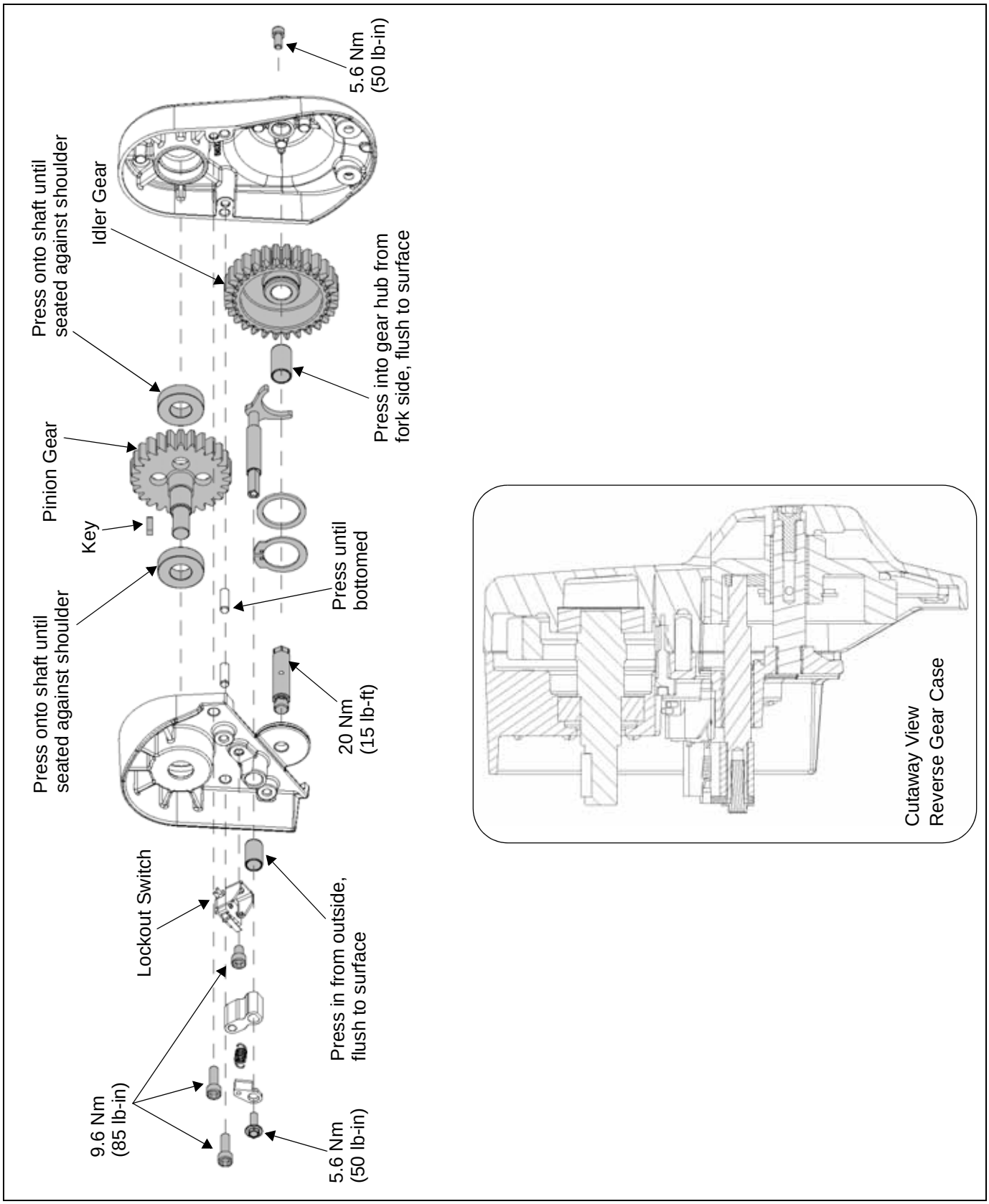

© 2009 Polaris Sales Inc.

REVERSE LINKAGE ADJUSTMENT

Linkage Rod Adjustment

1. Remove reverse lever (A) and motor cover (B).

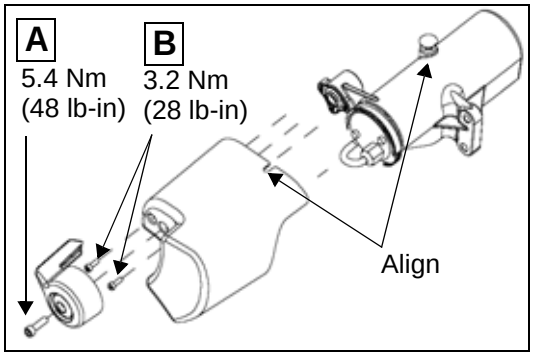

2. Be sure the reverse lever is down (rotated fully counterclockwise).
3. Hold linkage rod (C) and loosen jam nut (D).

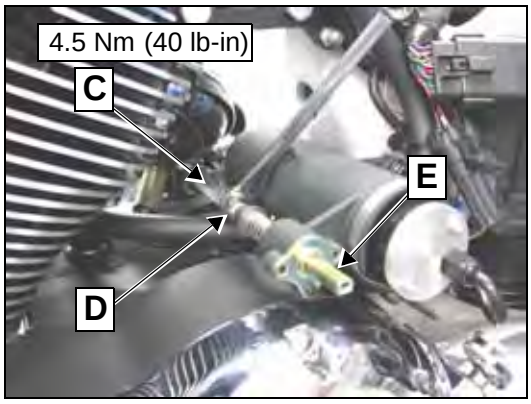

4. Temporarily place reverse lever on lever shaft (E).
5. Verify linkage rod ball joint (F) is tightened securely to lever shaft (that it did not come loose when jam nut was loosened in Step 3). If ball joint is loose, hold lever and tighten ball joint to lever shaft.

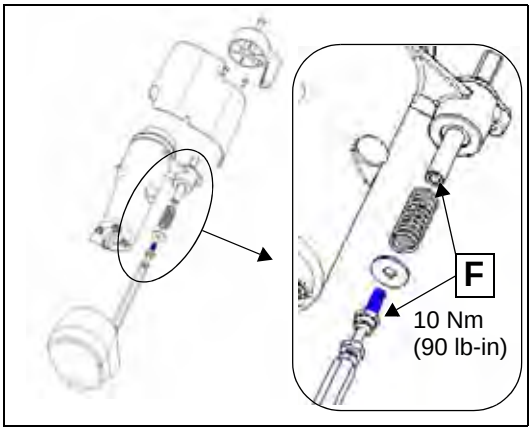

6. Rotate linkage rod to lengthen it until reverse idler gear lightly bottoms out against gearcase cover. Be sure lever shaft does not begin to rotate off the fully DOWN position.

NOTE: If linkage rod rotated past the point at which the gear is bottomed in the cover, the reverse lever will begin to rotate upward. If lever move upward, shorten linkage rod until reverse lever is down, then repeat adjustment.

7. When adjustment is correct, hold linkage rod and tighten jam nut firmly against linkage rod. Tighten jam nut.
8. Temporarily install the reverse lever and test the reverse actuation. Lever should return smoothly to a horizontal position when disengaged.
9. Re-assemble cover and reverse lever. Hold lever by hand to prevent rotation while tightening screw.
10. Perform Reverse System Test ().

© 2009 Polaris Sales Inc.

REVERSE SYSTEM TEST

1. Seated in a normal riding position on motorcycle, place transmission in Neutral and move reverse lever to the DOWN position (reverse disengaged).

2. Start engine and let it idle.

3. *Slowly* lift reverse lever toward UP (Reverse) position, while watching the gear position indicator on the instrument panel ("N"). The lever should move at least 1/4 inch (6mm) and *no more than 1/2 inch (12mm)* before the gear position indication changes to an "R" (a slight delay in the display is normal).

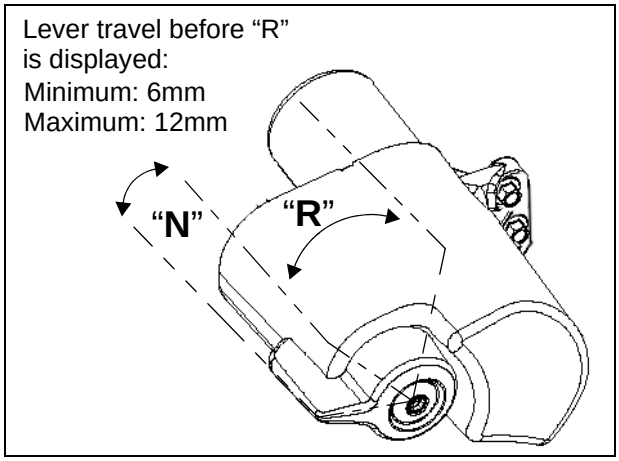

4. Lift reverse to fully UP (Reverse) position. Press the starter button. The motorcycle should move in reverse.

5. With Reverse engaged (reverse lever UP) pull in the clutch and place the transmission in any gear. The engine should stop immediately.

6. Return lever to Forward (down) position. Verify the engine will start, and that does not stop when the transmission is shifted into gear.

7. If reverse system does not operate properly as described above, see Reverse System Diagnostics beginning on page 19.41.

REVERSE COUPLER SHAFT KEY REPLACEMENT

The reverse gear drive shaft (coupler) has an inner and an outer drive key. If the reverse motor turns but the motorcycle does not move in reverse gear, inspect both drive keys on the shaft.

1. Remove reverse lever.
2. Remove reverse motor cover.
3. Hold linkage rod (A) and loosen jam nut (B). Do not loosen or remove ball joint at reverse lever shaft (C).

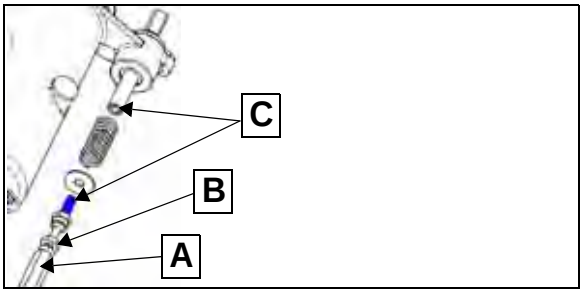

4. Disconnect reverse motor wire harness and reverse switch wire connector.
5. Remove motor mount bolts.
6. Rotate linkage rod to unscrew the ball joint while moving the motor outward until linkage rod is separated from ball joint.
7. Pull motor outward to separate coupler from gear shaft or motor shaft. Set motor assembly aside.
8. Pull coupler off motor shaft (or gear shaft).
9. Inspect drive key at each end and replace if damaged.
10. Lubricate coupler shaft with Moly Assembly Paste (PN 2871460) and install coupler shaft on gear shaft.
11. Install motor, routing the wire harness smoothly to the connector, away from mounting boss or moving parts.
12. Screw ball joint into linkage rod and engage motor end of coupler shaft, aligning key with key way.
13. Start motor mounting bolts and tighten lightly by hand. Continue to adjust linkage rod until motor mount tabs mate squarely with the mounting boss on the frame.

NOTE: Be sure motor is flush with frame before tightening mount bolts!

14. Assemble remaining parts in reverse order of disassembly (see page 11.10 for fastener torques).
15. Adjust reverse linkage (page 11.12) and perform a system test (page 11.13).

© 2009 Polaris Sales Inc.

TROUBLESHOOTING

TROUBLESHOOTING

PROBLEM	POSSIBLE CAUSE	POSSIBLE REPAIR NEEDED
Belt Shows Excessive Wear On One Side	Out-of-Alignment	Align rear wheel
Belt Squeal / Noise	Belt too tight	Adjust to 32mm Deflection @ 10 lbs. load (All 2008-2010)
	Out-of-Alignment	Align rear wheel
Broken Sprocket Teeth	Foreign material damage Loose drive belt or sprocket	Replace parts or repair as necessary
Broken or Torn Cogs on Belt	Foreign material damage, loose belt or sprocket	Replace parts as necessary
Belt Jumps Sprocket Teeth	Worn, damaged or out of adjustment belt or sprockets	Replace parts as necessary
	Belt Loose	Adjust Belt
Excessive Wear, Binding Suspension	Belt Tight	Adjust Belt
Broken Belt	Belt weakened by foreign material damage. Belt run excessively tight or loose for extended period	Replace Belt, Replace Sprockets
Reverse / Starter Motor Inoperative		See Chapter 19
Reverse Motor Turns But Vehicle Does Not Move	Reverse drive key(s) sheared.	Remove drive motor with shaft and replace key(s).

© 2009 Polaris Sales Inc.

CHAPTER 12
FRONT WHEEL / SUSPENSION

GENERAL 12.2
IMPORTANT INFORMATION. 12.2
SPECIAL TOOLS 12.2
SPECIAL TOOLS 12.2
MAINTENANCE PRODUCTS 12.2
MAINTENANCE PRODUCTS. 12.2
TORQUE SPECIFICATIONS. 12.2
FASTENER TORQUE SPECIFICATIONS 12.2
SPECIFICATIONS. 12.3
FRONT FORK SERVICE SPECIFICATIONS. 12.3
ASSEMBLY VIEWS & TORQUE VALUES 12.4
ASSEMBLY VIEW, FRONT FENDER ATTACHMENT. 12.4
FRONT FORK TYPE IDENTIFICATION. 12.5
ASSEMBLY VIEW, TRIPLE CLAMP & FRONT AXLE 12.6
ASSEMBLY VIEW, FRONT FORK -TYPE 1 (MARZ / 45MM TUBE DIAMETER) 12.7
ASSEMBLY VIEW, FRONT FORK -TYPE 2 (KYB) (46MM TUBE DIAMETER) 12.8
ASSEMBLY VIEW, FRONT WHEEL 12.9
ASSEMBLY VIEW, FRONT WHEEL / HUB CUT-AWAY 12.10
SERVICE PROCEDURES. 12.11
ASSEMBLY VIEW, HANDLEBAR 12.11
HANDLEBAR REMOVAL 12.12
HANDLEBAR INSTALLATION 12.12
FRONT WHEEL REMOVAL 12.13
FRONT AXLE INSPECTION 12.14
FRONT WHEEL INSPECTION. 12.14
BRAKE DISC REMOVAL 12.15
BRAKE DISC INSTALLATION 12.15
FRONT WHEEL BEARING INSPECTION 12.15
FRONT WHEEL BEARING REMOVAL 12.16
FRONT WHEEL BEARING INSTALLATION 12.16
FRONT WHEEL INSTALLATION 12.17
FRONT FORK REMOVAL 12.18
FRONT FORK DISASSEMBLY 12.19
FRONT FORK INSPECTION 12.24
FRONT FORK ASSEMBLY 12.25
FORK GUARD REPLACEMENT 12.29
FRONT FORK INSTALLATION 12.30
ASSEMBLY VIEW, STEERING STEM / TRIPLE CLAMPS 12.31
TRIPLE CLAMP REMOVAL 12.32
TRIPLE CLAMP INSTALLATION / STEERING HEAD BEARING ADJUSTMENT. . . . 12.33
STEERING STEM BEARING REMOVAL (TYPICAL EXAMPLE) 12.34
STEERING STEM BEARING INSTALLATION (TYPICAL EXAMPLE) 12.35
LOWER BEARING RACE REMOVAL 12.36
LOWER BEARING RACE INSTALLATION 12.36
TROUBLESHOOTING. 12.37
TROUBLESHOOTING 12.37
TROUBLESHOOTING (CONT.) 12.38

© 2009 Polaris Sales Inc.

GENERAL

IMPORTANT INFORMATION

WARNING

Victory motorcycles are produced using the designated tires listed as original equipment. This includes field testing to ensure stability and superior handling. The use of tires other than original equipment may cause instability which could lead to a crash, resulting in serious injury or death. Use only the recommended tires inflated to the recommended tire pressures based on load conditions as listed on the tire inflation decal.

Tubeless tires are used on certain Victory models. Operating the motorcycle with damaged rims creates a safety hazard including air pressure loss, steering imbalance and/or reduced steering control. Do not attempt to repair or straighten damaged rims.

CAUTION

Work performed to the front end of the motorcycle usually involves supporting the machine with the front end elevated. Take precautions so that the motorcycle is securely supported when the front tire is off the ground. This reduces the possibility of personal injury or damage to the motorcycle.

Leaking front fork seals are a safety hazard and should be replaced immediately if a leak is found. Fork oil may contaminate the front brake components which could reduce stopping ability of the motorcycle. Contaminated brake discs or pads greatly reduce the amount of stopping force available & increase stopping distance. Brake discs can be cleaned using Victory brake cleaner. NEVER attempt to clean contaminated brake pads. Replace pads as a set.

- Refer to Chapter 2 for **MAINTENANCE** of front end components.
- Refer to Chapter 14 for **TIRE REMOVAL, REPAIR, & BALANCING**
- Refer to Chapter 15 for **BRAKE SYSTEM** service and repairs.

SPECIAL TOOLS

SPECIAL TOOLS

Fork Seal Driver, 45mm (TYPE 1 Forks)	PV-43516-A
Fork Seal Driver, 46mm (TYPE 2 Forks)	PV-49494
Cartridge Holder	PV-49452
Damper Rod Extension Tool	PV-49453
Fork Spring Compressor	PV-49463
Oil Level Tool	PV-59000-A
Wheel Bearing / Stem Bearing Race Installation Set	PV-43515
Stem Bearing Remover	PV-43551
Spanner Socket (Steering Stem)	PV-43508
Lower Steering Stem Bearing Remover	PV-44683
Blind Bearing Remover Set (for wheel bearings)	PV-43551

MAINTENANCE PRODUCTS

MAINTENANCE PRODUCTS

Hand Grip Adhesive - Three Bond 1501 (10 ml tube)	2872575
FORK OIL TYPE	
For TYPE 1 Forks (All 2008 and some 2009-2010)	2874828
For TYPE 2 Forks (Some 2009-2010)	2874568
See “FRONT FORK TYPE IDENTIFICATION" page 12.5	

Refer to page 2.4 for a complete list of maintenance products and part numbers.

TORQUE SPECIFICATIONS

FASTENER TORQUE SPECIFICATIONS

Refer to Assembly Views on page 12.4 through page 12.11 for fastener torque specifications.

© 2009 Polaris Sales Inc.

SPECIFICATIONS

FRONT FORK SERVICE SPECIFICATIONS

2008 - 2010 VICTORY VISION™			
Item		**Standard**	**Service Limit**
Axle Runout		-	.20 mm (.008")
Front Wheel Runout (Billet and Cast Type) 3.00" x 18"	Axial	.50 mm (.020")	2.0 mm (.080")
	Radial	.50 mm (.020")	2.0 mm (.080")
See "FRONT FORK TYPE IDENTIFICATION" page 12.5			
Tube Diameter - **TYPE 1 (MARZ) FORKS/TRIPLE CLAMP**		45 mm	Not Applicable
Tube Diameter - **TYPE 2 (KYB) FORKS / TRIPLE CLAMP**		46 mm	Not Applicable
Fork Tube Runout		-	.20 mm (.008")
Fork Oil Type	**TYPE 1 FORKS**	Victory Fork Oil PN 2874828	
	TYPE 2 FORKS	Victory Fork Oil PN 2874568	
Fork Spring Pre-Load	**TYPE 1 FORKS**	33 mm (1.3") (Spacer Length)	Not Applicable
	TYPE 2 FORKS	34.5 mm (1.3") (Designed)	Not Applicable
Fork Spring Rate	**TYPE 1 FORKS**	10.4 - 30 N/mm (60 - 170 lb/in.) Rate Transition @ 75 mm Fork Compression	Not Applicable
	TYPE 2 FORKS	9.8 - 20.0 N/mm (56 - 114 lb/in.)	Not Applicable
Fork Spring Free Length	**TYPE 1 FORKS**	422 mm (16.625 in)	416 mm (16.625 in)
	TYPE 2 FORKS	457.9 mm (18.02 in)	
Fork Oil Level (From Top of Tube)	**TYPE 1 FORKS:** Measured with spring and pre-load spacer removed, inner tube fully compressed.	255 mm (10.04")	±1 mm (.039")
	TYPE 2 FORKS: Measured with spring removed, inner tube fully compressed.	136 mm (5.35")	±1 mm (.039")
Fork Oil Capacity (per leg, dry)	**TYPE 1 FORKS:** Oil level must be measured and adjusted to specification.	330 cc (330 ml)	Set Level See "FRONT FORK ASSEMBLY" page 12.25
Fork Oil Capacity (per leg, dry)	**TYPE 2 FORKS:** Oil level must be measured and adjusted to specification.	550 cc (550 ml)	

© 2009 Polaris Sales Inc.

ASSEMBLY VIEWS & TORQUE VALUES

FRONT FENDER

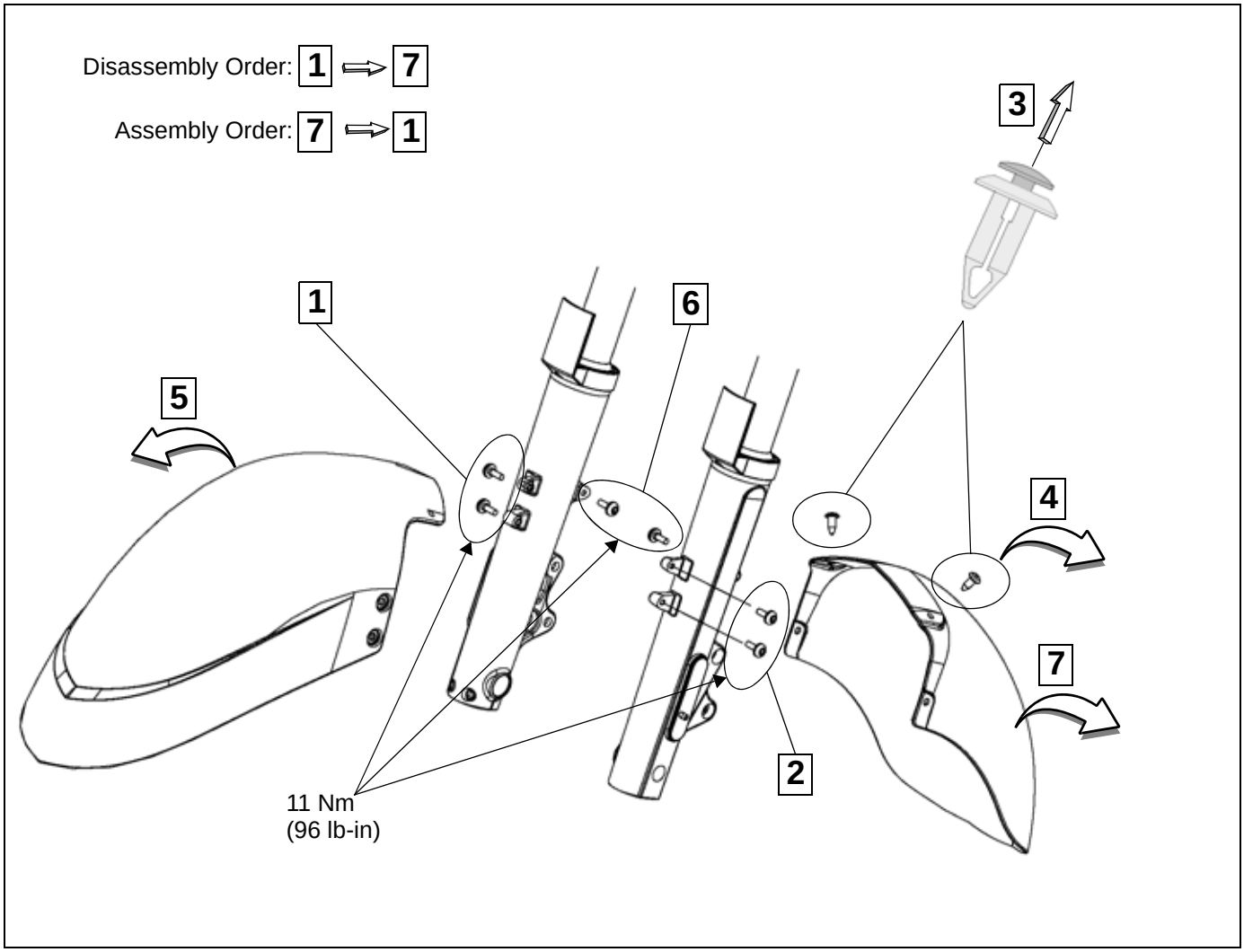

© 2009 Polaris Sales Inc.

FRONT FORK TYPE IDENTIFICATION

Two types of front forks and triple clamps are used on 2009-2010 Victory Vision models. All 2008 models are TYPE 1. TYPE 1 parts and fork oil are NOT interchangeable with TYPE 2. Identify type before starting service work and before ordering service parts.

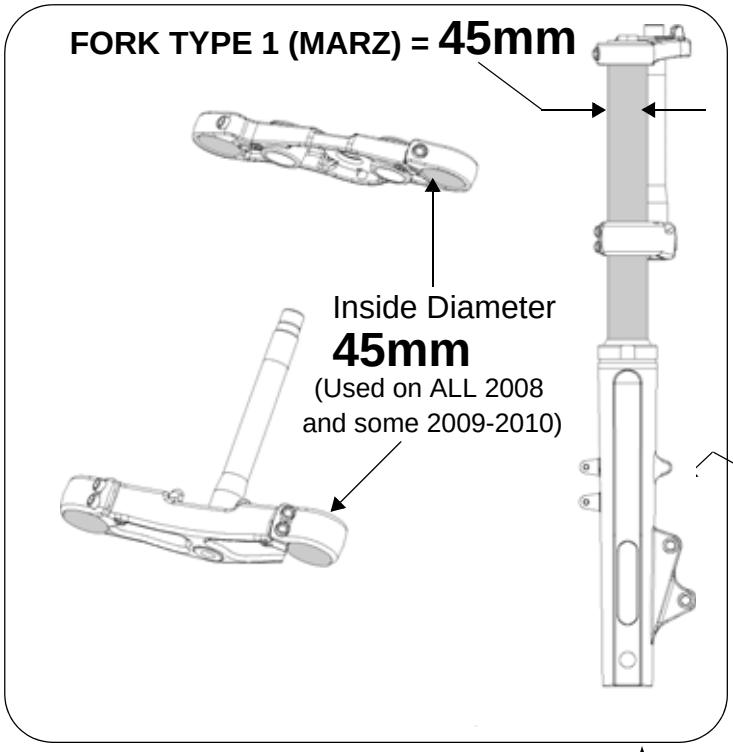

FORK TYPE 1
Fork Slider - Marked "M"
FORK OIL: PN 2874828

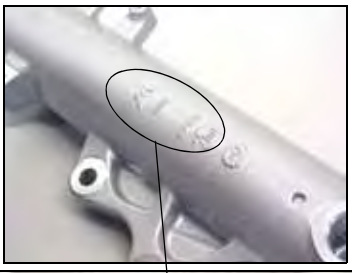

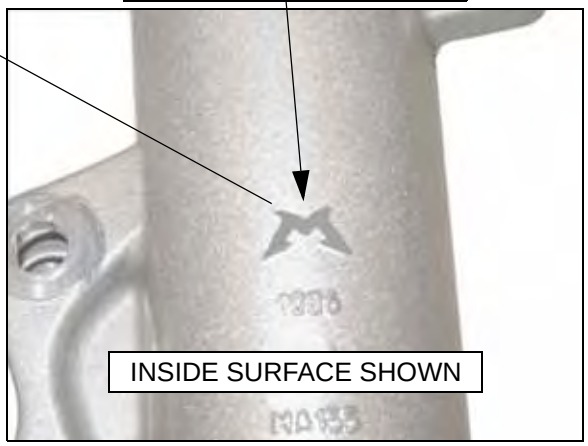

PARTS NOT INTERCHANGEABLE!

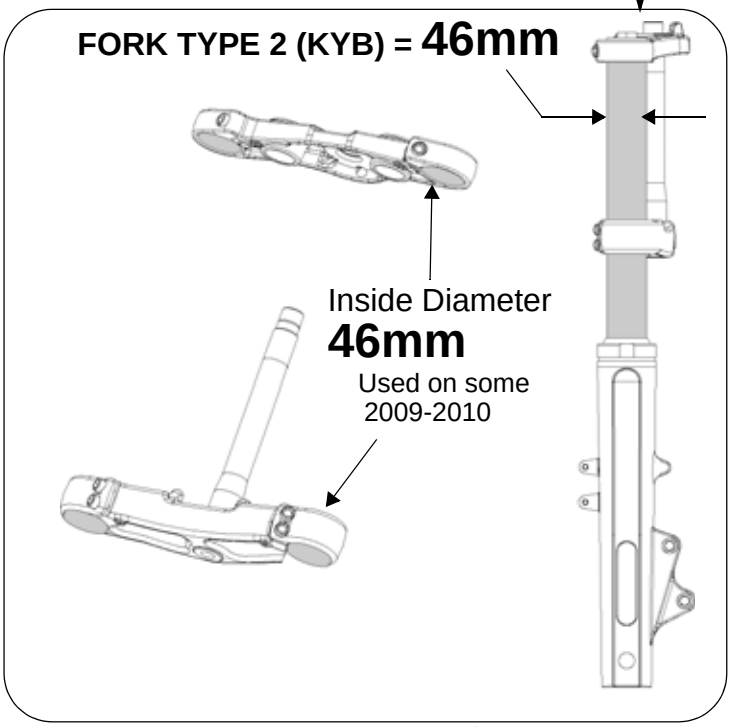

FORK TYPE 2
Fork Slider - Not Marked "M"
FORK OIL: PN 2874568

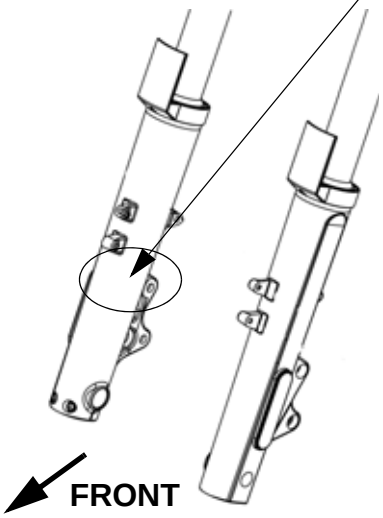

12

© 2009 Polaris Sales Inc.

ASSEMBLY VIEW, TRIPLE CLAMP & FRONT AXLE

! IMPORTANT! See Fork Type Identification on page 12.5 to identify fork type before you begin service or repair.

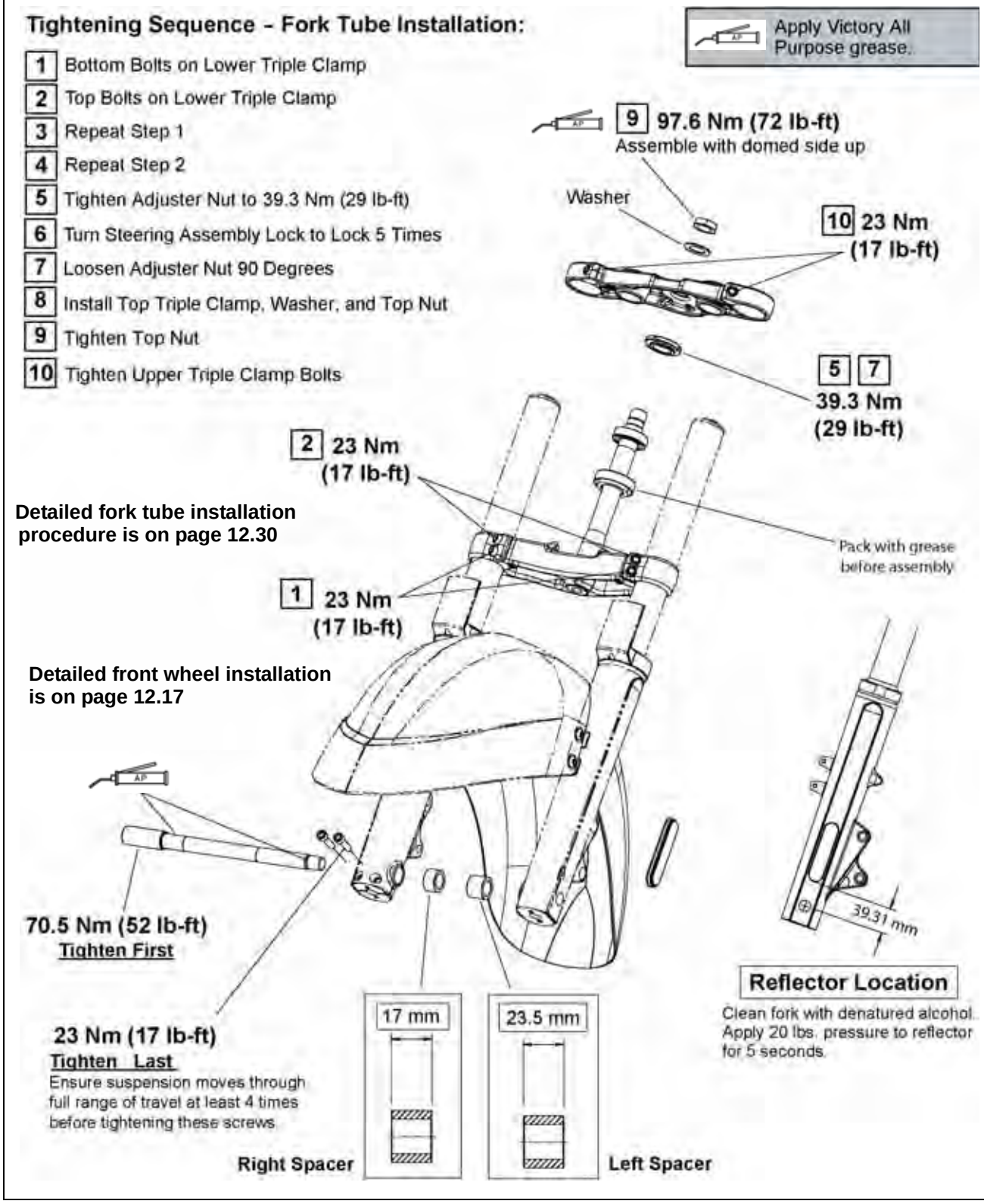

© 2009 Polaris Sales Inc.

ASSEMBLY VIEW, FRONT FORK -TYPE 1 (MARZ / 45mm Tube Diameter)

! IMPORTANT! See Fork Type Identification on page 12.5 to identify fork type before you begin service or repair.

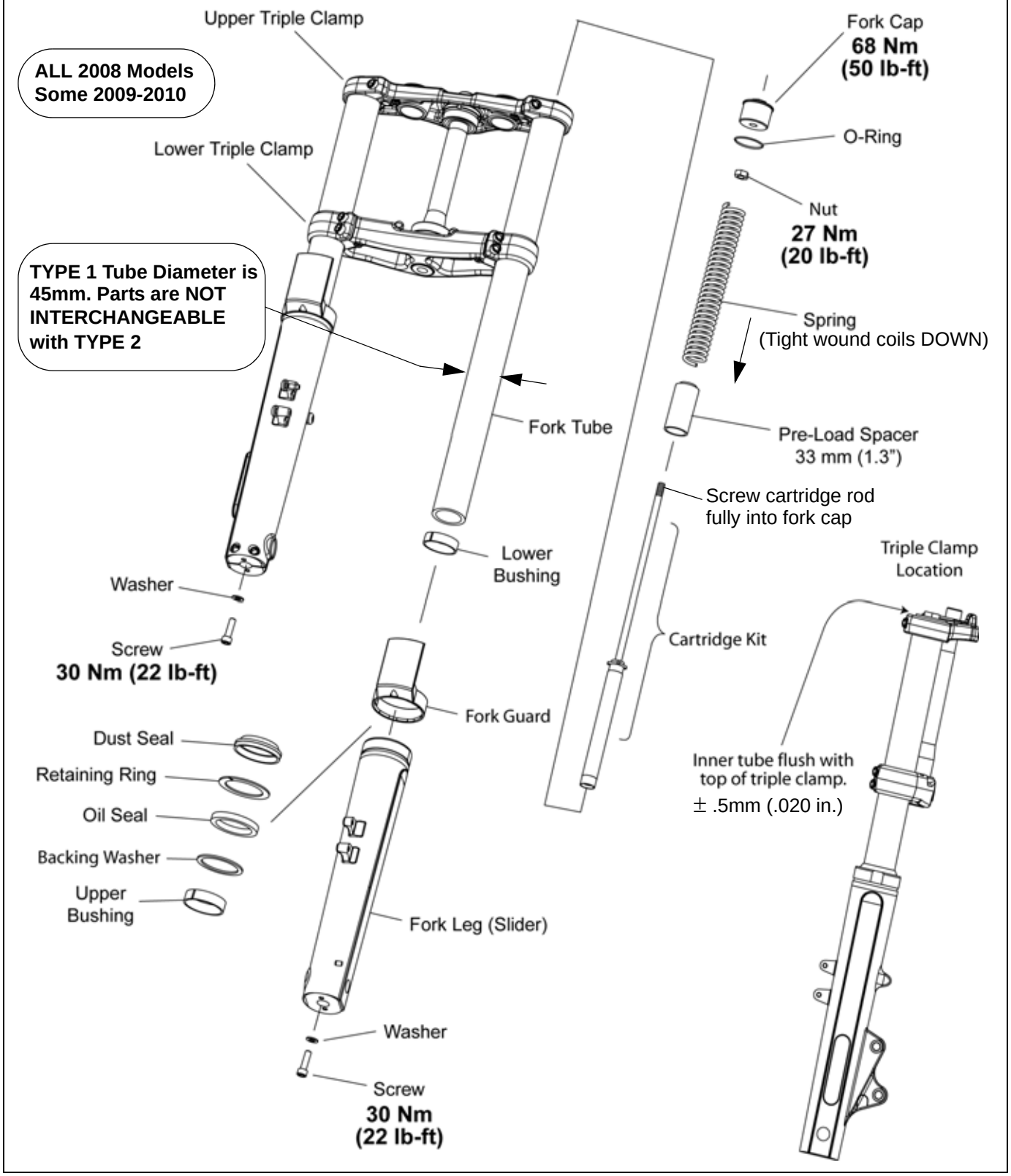

© 2009 Polaris Sales Inc.

ASSEMBLY VIEW, FRONT FORK -TYPE 2 (KYB) (46mm Tube Diameter)

! IMPORTANT! See Fork Type Identification on page 12.5 to identify fork type before you begin service or repair.

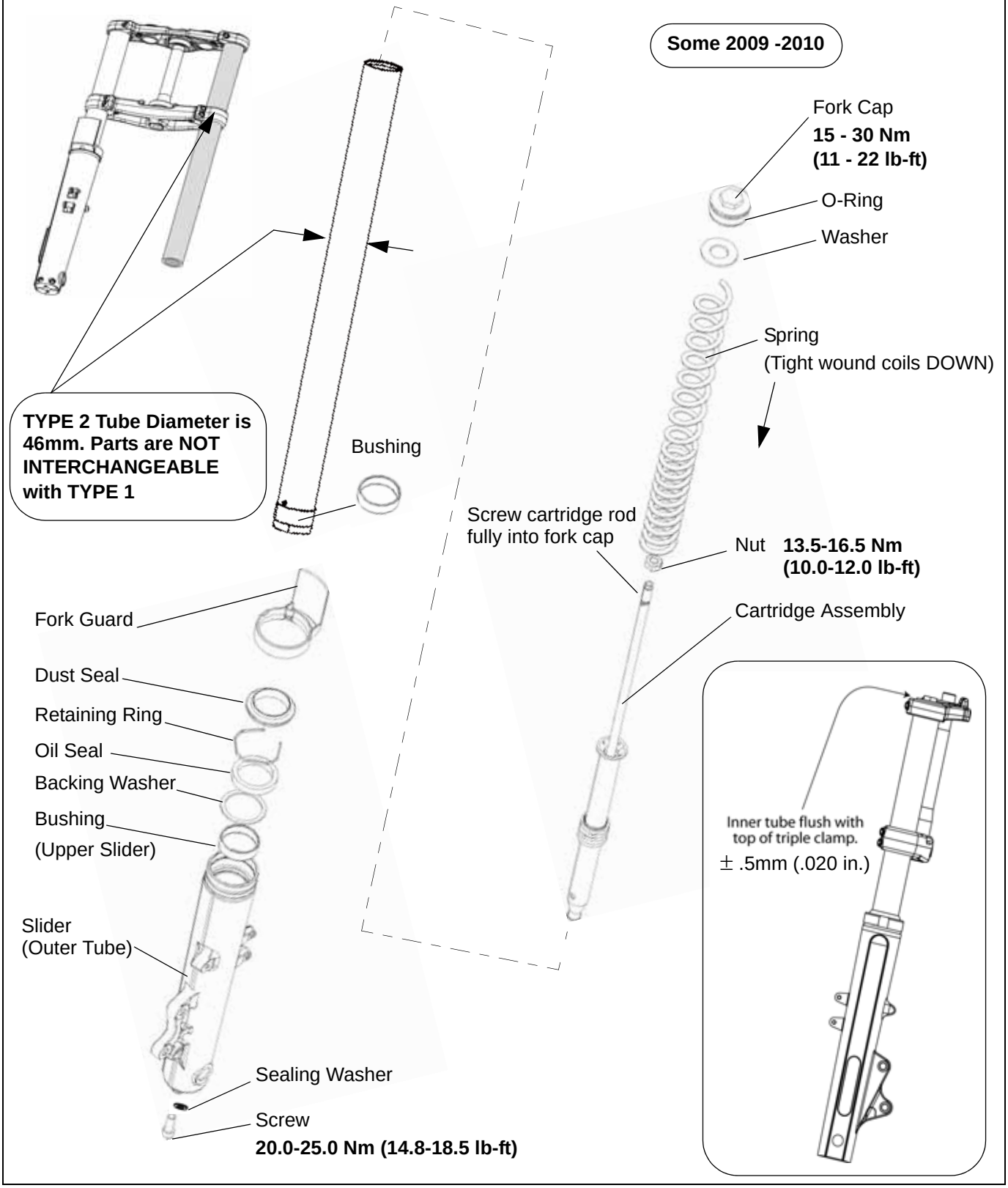

© 2009 Polaris Sales Inc.

ASSEMBLY VIEW, FRONT WHEEL

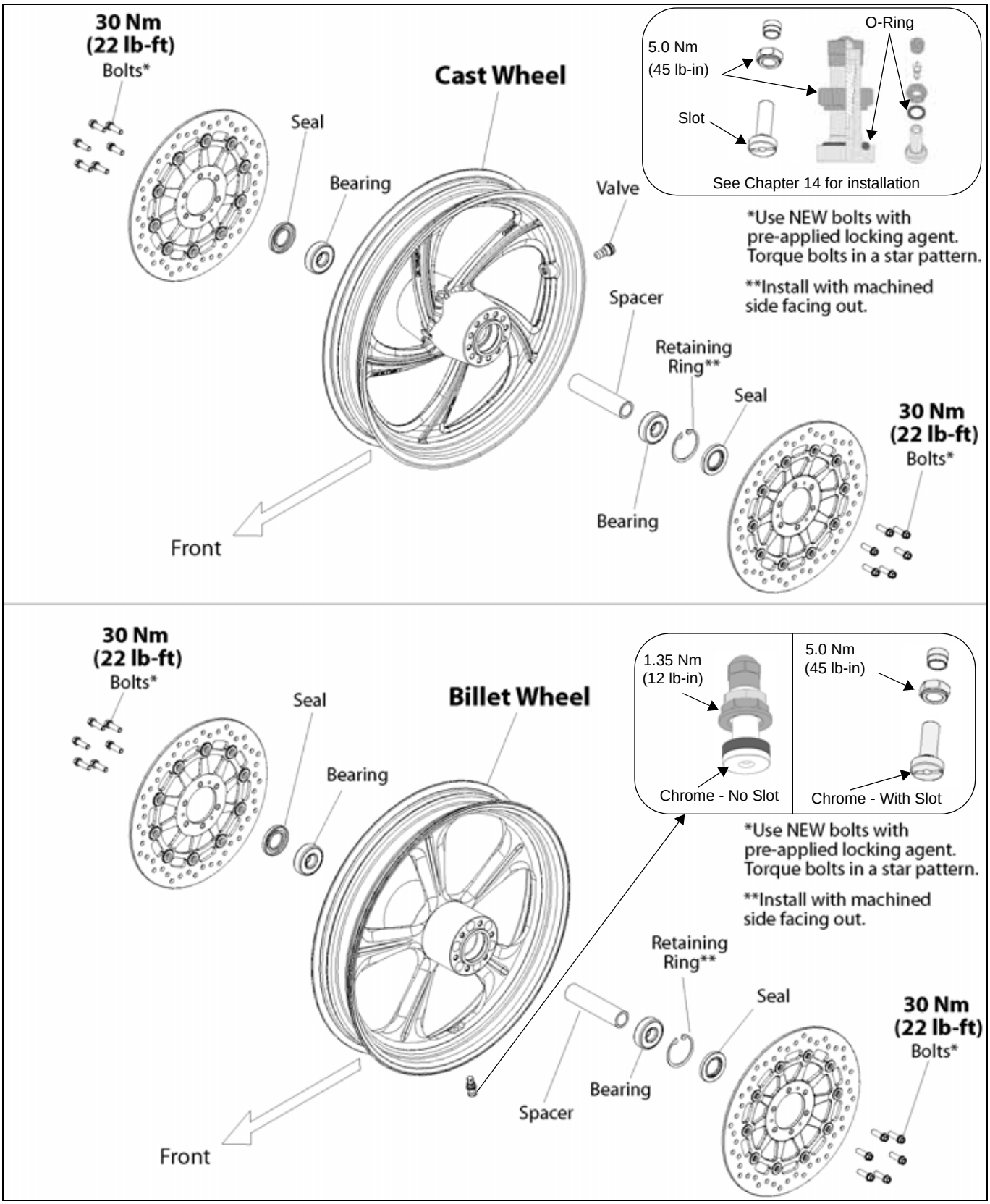

12

© 2009 Polaris Sales Inc.

ASSEMBLY VIEW, FRONT WHEEL / HUB CUT-AWAY

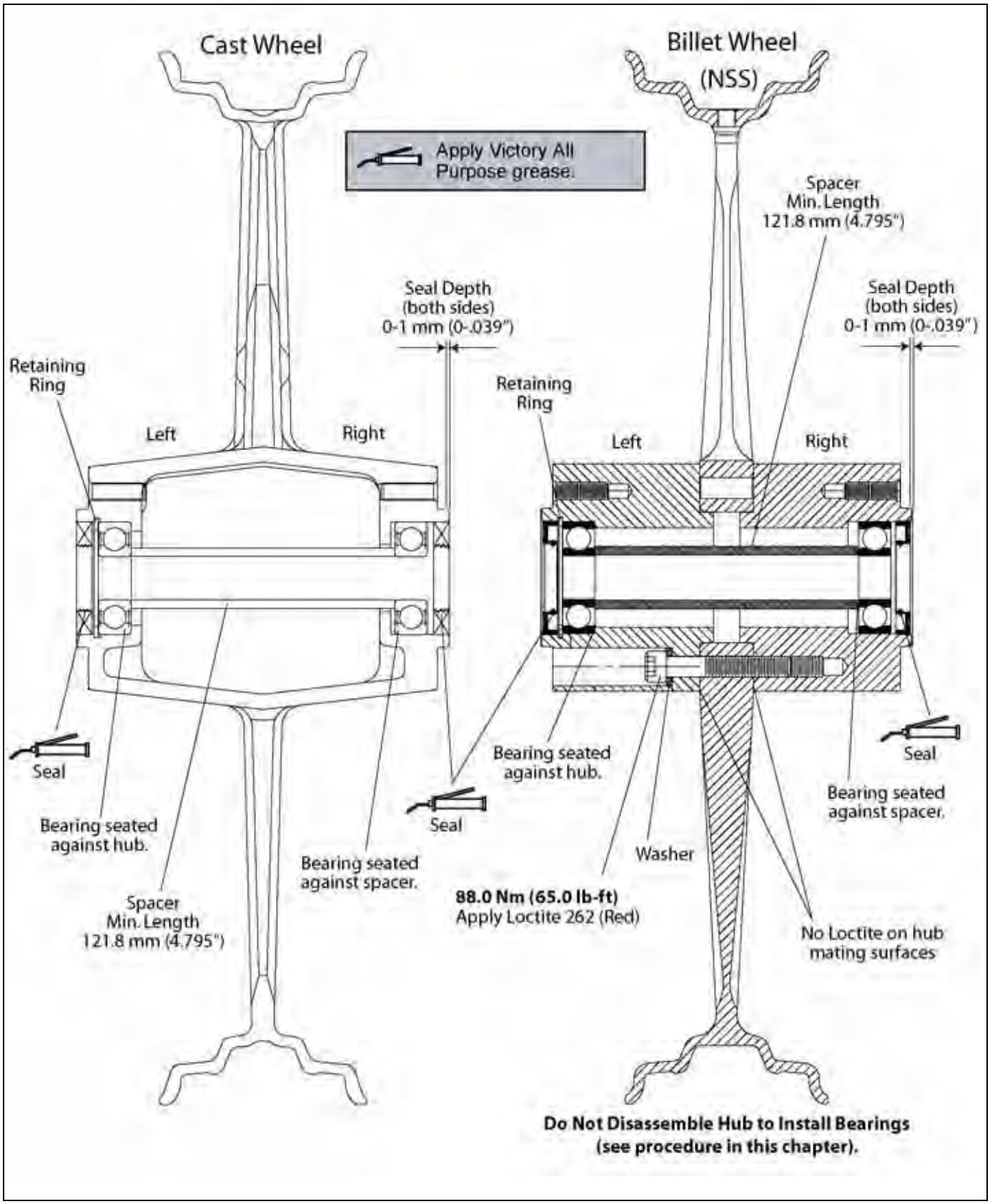

© 2009 Polaris Sales Inc.

ASSEMBLY VIEW, HANDLEBAR

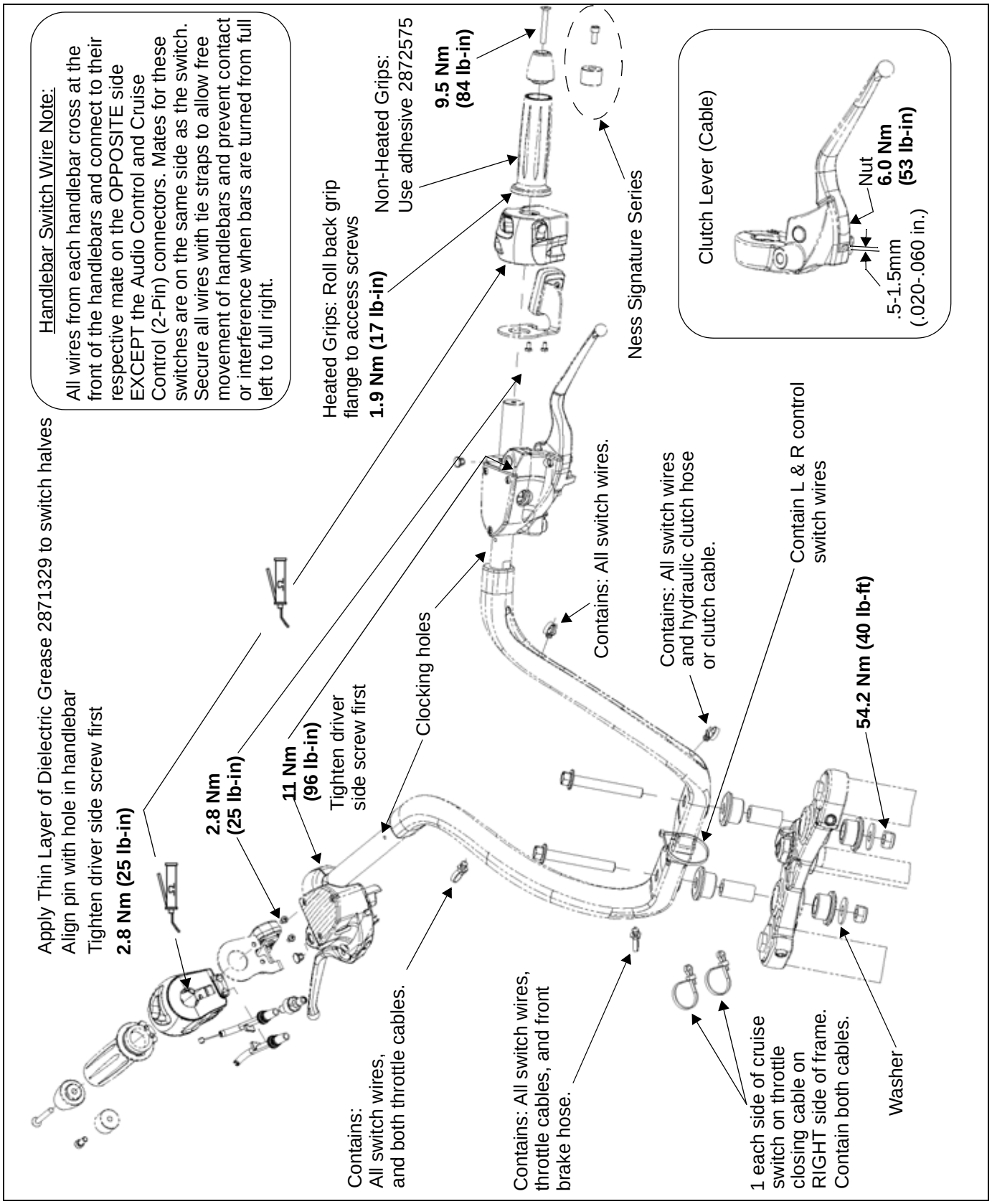

© 2009 Polaris Sales Inc.

SERVICE PROCEDURES

HANDLEBAR REMOVAL

CAUTION

Left handlebar grip and grip end may be damaged during the removal process. Plan on replacing the left grip if it must be removed. Many items will be hanging loose when removing the handlebars. Cover painted or chrome parts to prevent damage. Keep master cylinder reservoirs upright to prevent air from entering. Special care should be taken to protect cosmetic surfaces from loose parts during the removal process. Secure or support parts or set them aside as they are removed. Note wire harness and cable routing
for assembly later. DO NOT bend or kink cables during the removal process.

NOTE: Refer to illustration on page 12.11 for torque values of fasteners. See page 19.20 for Cruise Control cable replacement.

IMPORTANT: Keep master cylinder reservoir(s) upright to prevent air from entering system.

1. Remove seat, instrument bezel, and bridge console (see Chapter 3).
2. Remove both handlebar ends (4mm Allen).
3. Disconnect heated grip wires (if equipped).
   Non-Heated Grip: Use a screwdriver to lift LEFT grip and separate the adhesive. Pry off grip.
   Heated Grip: Pull back flange on LEFT grip to expose (2) fasteners (T20 Torx). Remove fasteners and slide grip off end of bar.
4. Push tab on harness side of left and right handlebar switch connectors and separate both switch connectors.
5. Push lever tab on clutch switch and pull to remove connector. Remove clutch master cylinder or lever perch on 8-Ball (5mm Allen). Set master cylinder in console area.
6. Remove Audio Control switch from mounting plate and then remove plate from left switch cube.
7. Carefully cut tie straps and (4) handlebar dart straps.
8. Disconnect front brake switch wires. Remove front brake master cylinder clamp (5mm Allen). Set master cylinder in console area.
9. Remove cruise control switch from mounting plate. Remove plate from right switch block.
10. Loosen throttle cable adjusters to add maximum cable freeplay.
11. Remove plate from bottom of right switch cube, then remove switch cube screws and switch cube.
12. Remove throttle twist grip assembly from handlebar. Carefully remove cables from twist grip (if required). Do not bend or kink cables during removal.

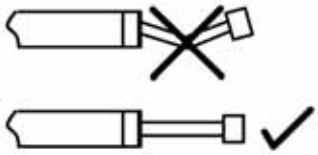

13. Remove handlebar mounting bolts (16 & 19 mm), washers, upper and lower bushings, and sleeves.

CAUTION

DO NOT pinch harnesses or hoses in the vicinity while removing the fasteners.

14. Remove handlebars from top triple clamp.

HANDLEBAR INSTALLATION

NOTE: Refer to illustration on page 12.11.

1. Install new dart straps into handlebars.
2. Place upper and lower bushings with sleeve in top triple clamp.
3. Position handlebars on top of bushings and insert mounting bolts. Torque to 54.2 Nm (40 lb-ft).

CAUTION

DO NOT pinch wires or hoses in the vicinity while installing and tightening fasteners.

4. Clean inside of throttle grip assembly and throttle grip area on handlebar. Apply a small amount of dielectric grease on clamp area of switch cubes.
5. Install throttle grip and bottom half of right switch cube, then position upper half of switch cube, engaging pin with clocking hole in handlebar.

© 2009 Polaris Sales Inc.

6. Lightly grease throttle cable ends and connect ends to throttle grip. Do not bend or kink cables.
7. Install top of right switch cube over the grip and insert (2) screws on the bottom. Torque rear (driver's side) screw first to **2.8 Nm (25 lb-in)**.
8. Install left switch cube and position via clocking pin and hole. Torque rear (driver's side) screw first to **2.8 Nm (25 lb-in)**.
9. Clean left-hand grip mounting surface on handlebar.
10. **For non-heated grips**, apply a 1/8" bead of grip adhesive (PN 2872575) to the inner edge of the grip flange. Install left hand grip and wipe away excess adhesive.

> **CAUTION**
>
> Read and follow all instructions and pre-cautions on adhesive container.

11. **For heated grips**, roll back grip portion on end to reveal holes for (2) screws and install screws. Torque screws to **1.9 Nm (17 lb-in)**.
12. Install master cylinders or lever perch (8-Ball) and torque rear (driver's side) screws first to **9.9 Nm (88 lb-in)** (5mm hex).
13. Route cables and wires along handlebars as indicated on page 12.11, and secure with dart straps and tie straps as indicated. See Handlebar Switch Wire Note on page 12.11.
14. Install end caps on handlebars and torque screws to **9.5 Nm (84 lb-in)**.
15. Install bridge console, seat, trim panel and instrument bezel (see Chapter 3).
16. Adjust throttle cables to freeplay specification of 2 - 4 mm (1/8" +/- 1/16"). See page 2.9.
17. Check operation of throttle assembly.
18. Check operation of switches and controls.
19. Check operation of front brake. Perform lever reserve test (page 2.11).

FRONT WHEEL REMOVAL

1. Refer to illustration on page 12.6.
2. Securely support front end of motorcycle so front wheel is off the ground.

> **CAUTION**
>
> Take precautions so that the motorcycle is securely supported when the tire is off the ground.

3. Remove upper front fender (page 12.4).
4. Remove right-hand brake caliper and support so brake line is not stressed.

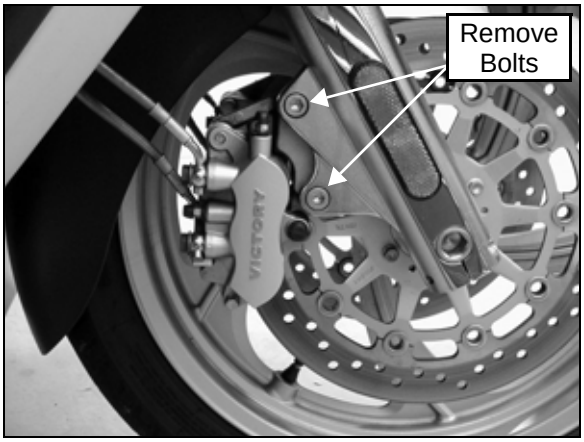

> **CAUTION**
>
> Do not twist the brake hose or brake line. Do not allow caliper to hang from the brake hose. Secure caliper in such a way to avoid hose damage.

NOTE: Do not operate the front brake lever with the caliper or wheel removed.

(Cont.)

© 2009 Polaris Sales Inc.

Front Wheel Removal (Cont.)

5. Loosen lower pinch bolts (B) on right-hand fork leg.

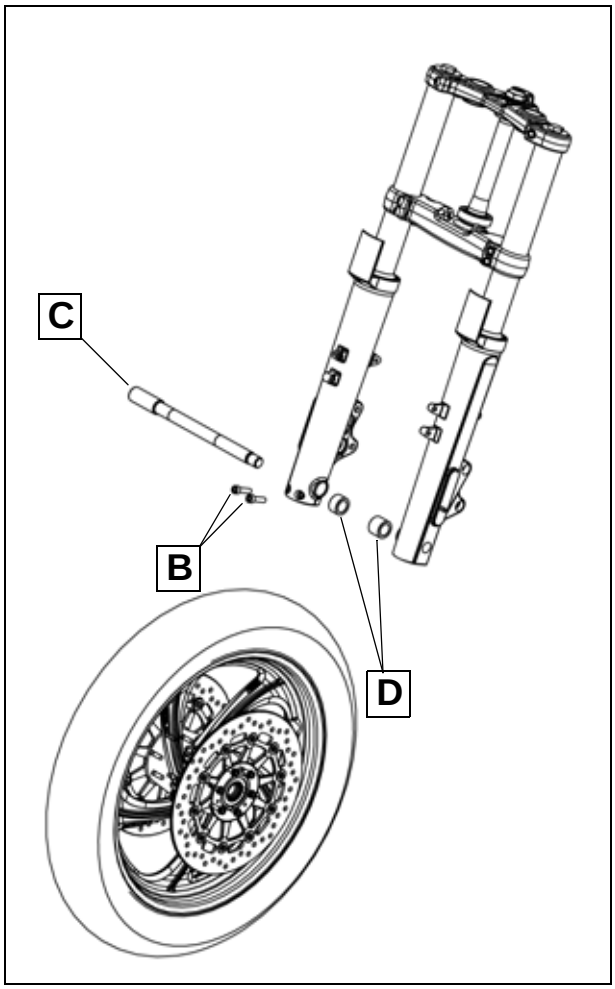

6. Loosen axle (C). Be sure vehicle is stable and supported.

7. Remove axle. Be prepared to catch spacers (D) and remove wheel.

IMPORTANT: Note width and location of spacers.

FRONT AXLE INSPECTION

1. Place axle in V-blocks and inspect runout. Compare to specifications on page 12.2.

2. Replace axle if it fails inspection. Do not attempt to straighten a bent axle.

FRONT WHEEL INSPECTION

1. Install front wheel in truing stand.

NOTE: Bearings must be in good condition to accurately measure runout.

2. Set up a dial indicator to measure radial runout (up and down) (A) and compare to specifications (page 12.3).

3. Position dial indicator to measure axial runout (side to side) (B) and compare to specifications (page 12.3).

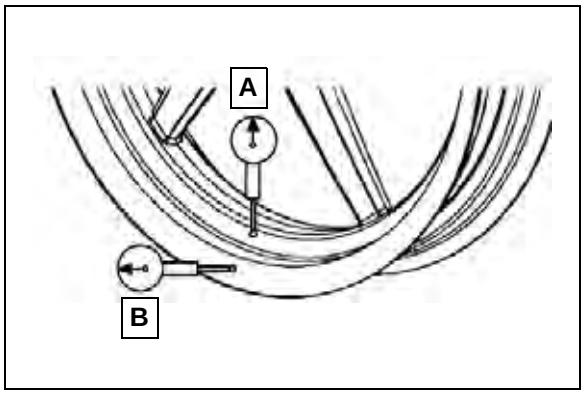

4. Visually inspect wheel for cracks.

5. Replace wheel if it fails visual or measured inspection. Do not attempt to straighten cast or billet wheels.

© 2009 Polaris Sales Inc.

BRAKE DISC REMOVAL

NOTE: Disc must be inspected before removing from wheel. Refer to Chapter 15 for disc inspection.

1. Remove front wheel (page 12.13).
2. Remove and discard brake disc screws.
3. Remove brake disc(s) from wheel.

BRAKE DISC INSTALLATION

1. Clean screw hole threads with Loctite Primer N.
2. Clean surface of wheel and brake disc.
3. Install disc on wheel with part number facing OUT.
4. Install with new screws which have a pre-applied locking agent.

WARNING

Do not re-install brake disc screws. Use only new screws which have a pre-applied locking agent.

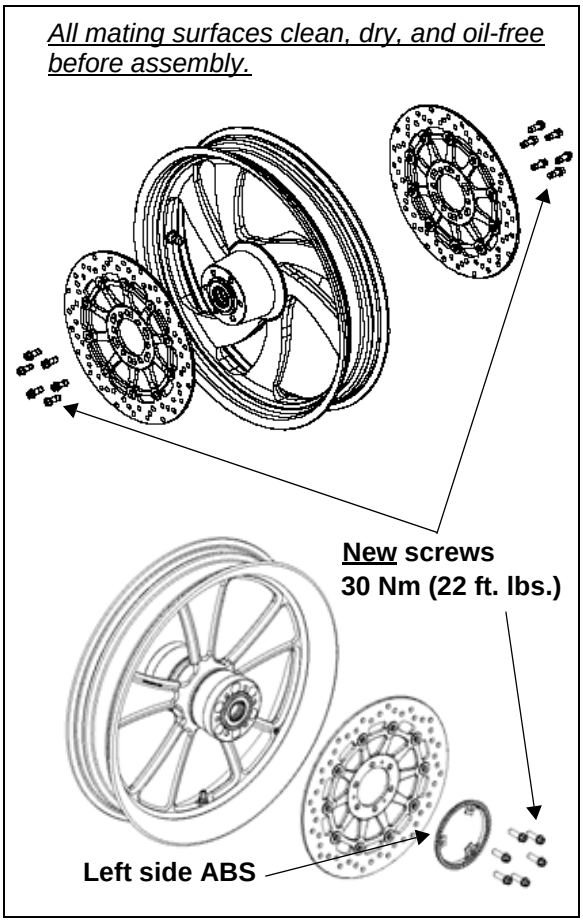

FRONT WHEEL BEARING INSPECTION

NOTE: Inspect bearings installed in wheel. Do not remove to inspect. Bearings cannot be repacked. Replace both wheel bearings if either fails inspection, or if either bearing was removed. For inspection with wheel installed, see page 2.31.

1. Visually inspect bearing seals (A) on each side for wear or damage.

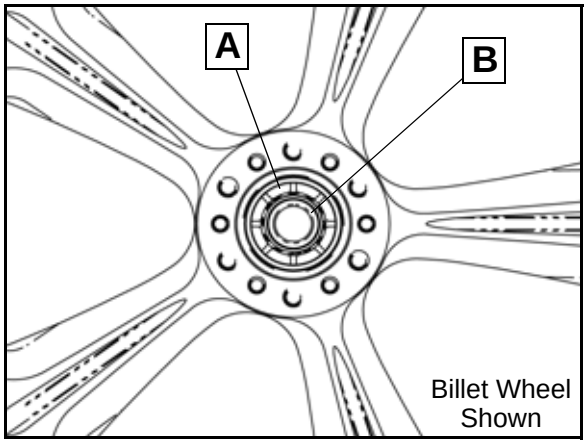

2. Check bearings by turning inner race (B) by hand.
   - Look for signs of discoloration, scoring, galling, or contamination from moisture or dirt. Replace bearings if any of the above are present.
   - Turn inner race of bearings. Bearings should turn smoothly and quietly. Inner race should be firm with minimal side to side movement and no detectable up and down movement.
3. Discard bearings that fail inspection.

CAUTION

Do not reuse bearings after removing them from the wheel. Removal damages the bearings internally.

4. Inspect bearing fit in wheel hub. Outer race of bearing must fit tightly in bore. You should not be able to move it (or remove it) by hand. Replace wheel if outer race of a new bearing does not fit tightly in the bore.

© 2009 Polaris Sales Inc.

FRONT WHEEL BEARING REMOVAL

NOTE: Replace both wheel bearings as a set. Do not replace only one wheel bearing.

1. Place a shop towel over the edge of seal bore.

2. Carefully remove both seals using a pry-bar and discard. Be careful not to scratch the seal bore.
3. Remove retaining ring from left side.
4. Install bearing remover element into left side bearing and remove it.

Blind bearing remover PV-43551

5. Remove bearing spacer from wheel hub, measure the length and compare to specification. Replace spacer if it is worn beyond the service limit or if the bearing contact surface is damaged.

Minimum Spacer Length: 121.80 mm (4.795”)

6. Use an appropriate drift, drive out right side bearing.

FRONT WHEEL BEARING INSTALLATION

NOTE: Refer to illustration below for Steps 3-9.

1. Clean inside of wheel hub and bearing spacer. Replace spacer if any wear is evident on the ends.
2. Place new bearing into left hand side of wheel with markings facing up (toward outside of hub).
3. Assemble bearing installation tool with flat side of 50-51 mm collar against bearing. Collar must be slightly smaller than O.D. of bearing and must be flat to support inner and outer race equally. **DO NOT pull or press on inner race of ball bearings or bearing will be permanently damaged!** Assemble right side of tool as shown and pull bearing into hub until fully seated.

Bearing installation tool set: PV-43515
NOTE: Use of this special tool is shown with rear wheel bearing installation in Chapter 13.

4. Turn wheel over and install bearing spacer.
5. Place new right wheel bearing onto wheel with markings facing up.
6. Install another 50-51 mm wheel bearing installation tool against bearing.
7. Pull bearing in to right side of wheel until seated against spacer.
8. Remove tool. Check that spacer is centered with bearings. If not, center it by inserting front axle. Repeat Step 7 to fully seat bearing on spacer.
9. Install retaining ring. Be sure it is fully seated in the groove.

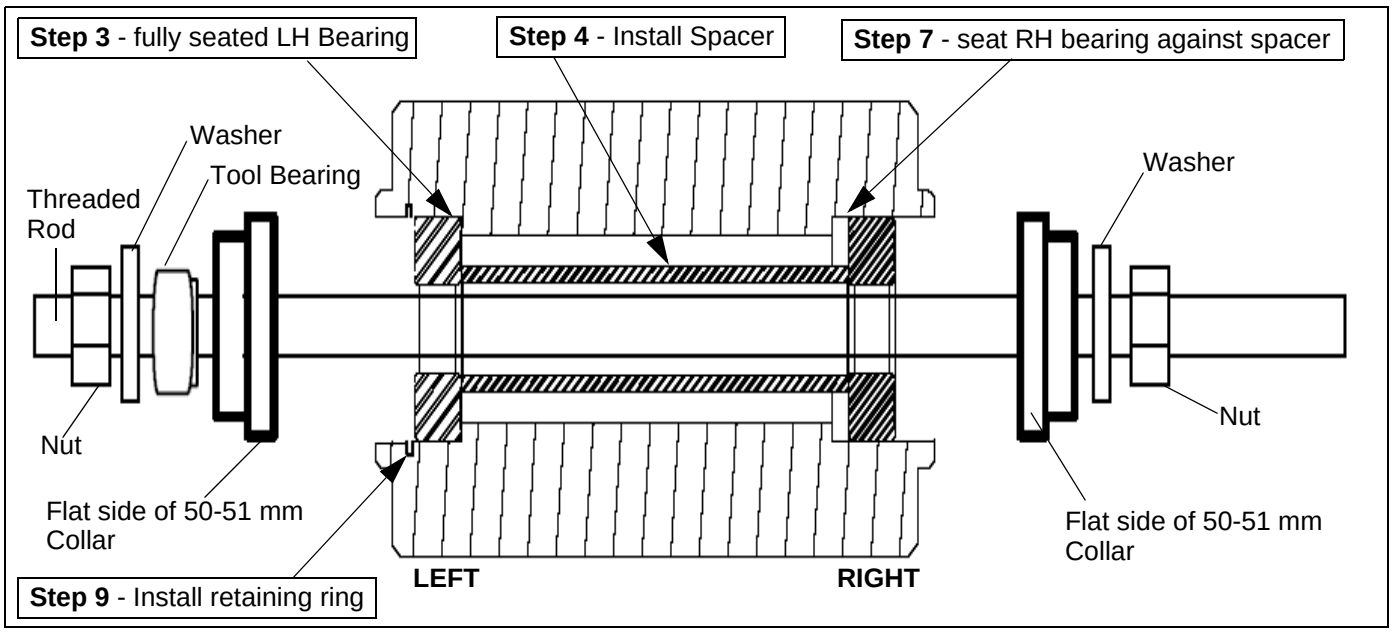

© 2009 Polaris Sales Inc.

10. Install new seals using a 52 mm seal driver.

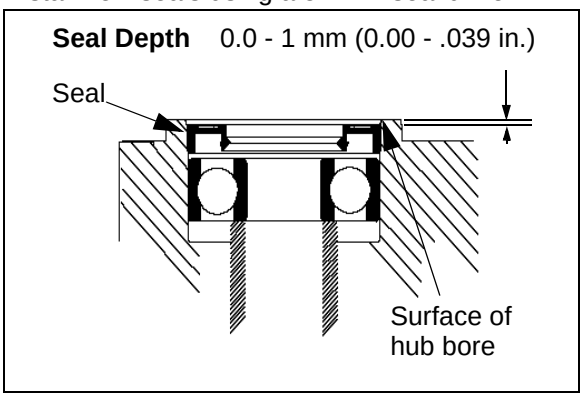

11. Rotate inner races of bearings to check for free, smooth rotation.

12. Install brake discs (see “Brake Disc Installation”). Clean discs with Victory Disc Brake Cleaner.

CAUTION

Do not allow brake cleaner to contact painted surfaces.

WARNING

Grease or oil on the brake disc will increase stopping distance which may lead to loss of vehicle control or an accident.

FRONT WHEEL INSTALLATION

NOTE: Also refer to illustration on page 12.6.

1. Clean all wheel components before installation.
2. Lubricate axle and spacers with a light film of grease.

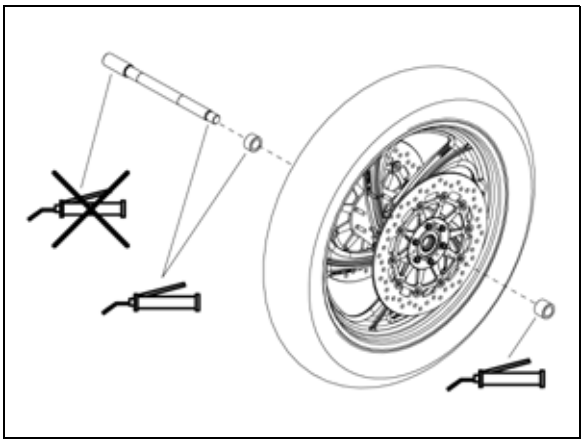

Victory All Purpose Grease: 2872187

3. Install spacers in wheel hub.

NOTE: The left-hand spacer is wider than the right.

4. Clean brake disc and install wheel noting direction of rotation, fitting brake disc between brake pads on caliper.
5. Align and install axle shaft through right-hand side of the right-hand fork tube.

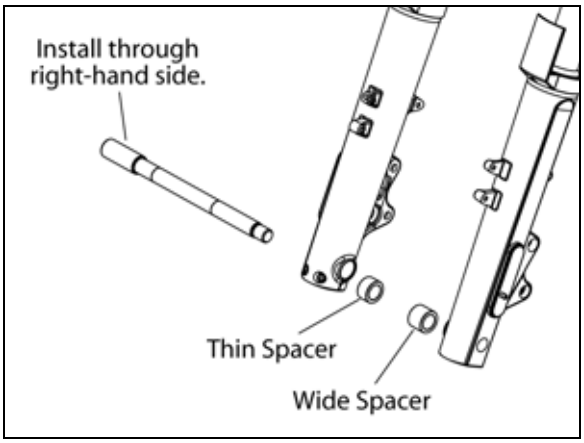

6. Push axle through the wheel and axle spacers and into the left fork tube.
7. Thread the axle shaft into the left-hand fork tube and **torque to 70.5 Nm (52 lb-ft).**
8. Separate brake pads in brake caliper(s) and install caliper over disc. **Torque mounting screws to 42 Nm (31 lb-ft)**.

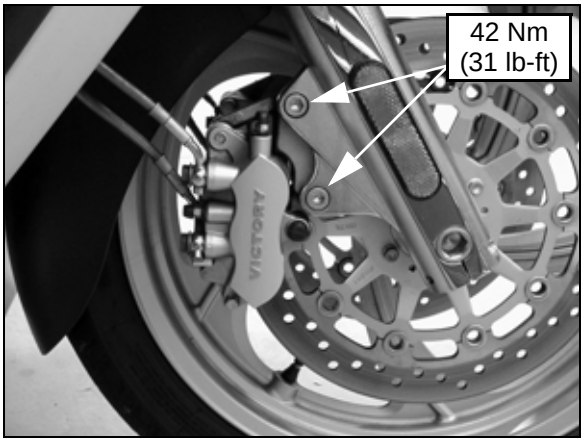

9. Lower front end of machine.
10. Slowly pump front brake lever to regain pressure.

© 2009 Polaris Sales Inc.

11. Apply and hold front brake. Pump forks to move suspension through full range of travel at least 4 times.

NOTE: Fork action should be smooth without binding. If problems are found, inspect for cause and correct as necessary.

12. Torque pinch bolts (A) to 23 Nm (17 lb-ft).

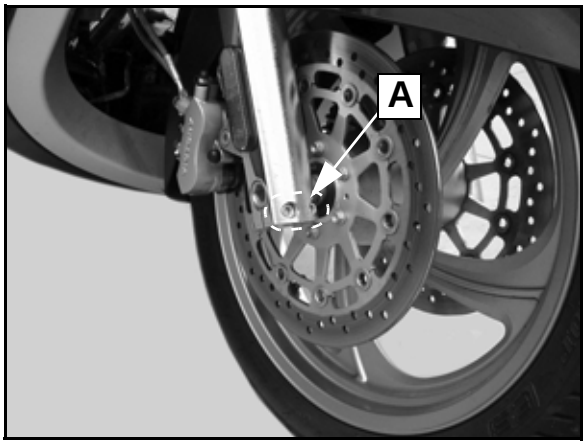

13. Elevate front wheel and spin it to check for drag. Apply and release front brake. Wheel should spin freely and quietly without drag when brake lever is released.

14. Install the upper front fender (page 12.4).

15. Lower front end of machine.

16. Inspect operation of front brake lever. Bleed front brake system if lever is not firm. (Refer to Chapter 15).

FRONT FORK REMOVAL

1. Securely support front end of motorcycle so front wheel is off the ground.

⚠ CAUTION

Take precautions so that the motorcycle is securely supported when the tire is off the ground.

2. Remove front fender (upper and lower portions).
3. ABS models: Remove wheel speed sensor.
4. Remove both front brake calipers.
5. Secure calipers and brake lines out of the way.

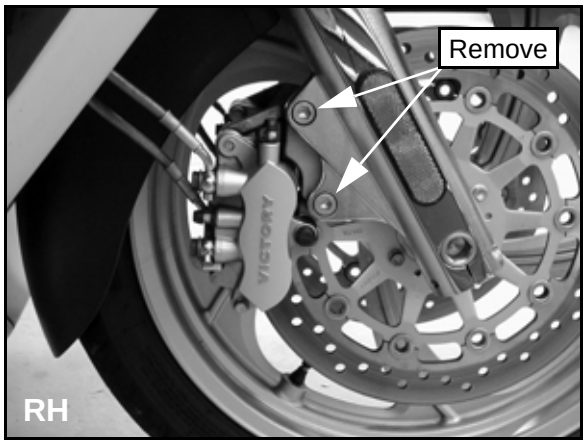

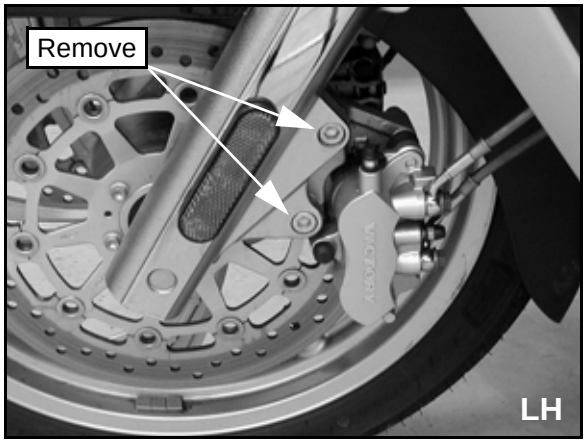

⚠ CAUTION

Do not twist the brake hose or brake line.
Do not allow caliper to hang from the brake hose.
Secure caliper in such a way to avoid hose damage.

6. Remove front wheel (page 12.13).

© 2009 Polaris Sales Inc.

7. Loosen upper triple clamp pinch bolt for each fork tube.

8. If disassembling the fork tube(s), loosen the fork cap(s) prior to loosening the lower triple clamp bolts.

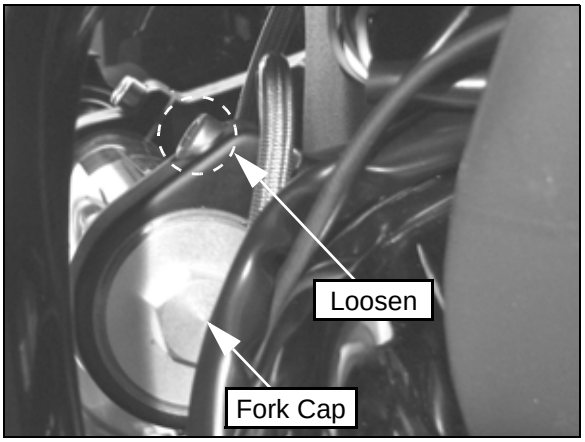

9. Loosen lower triple clamp pinch bolts for each fork tube.

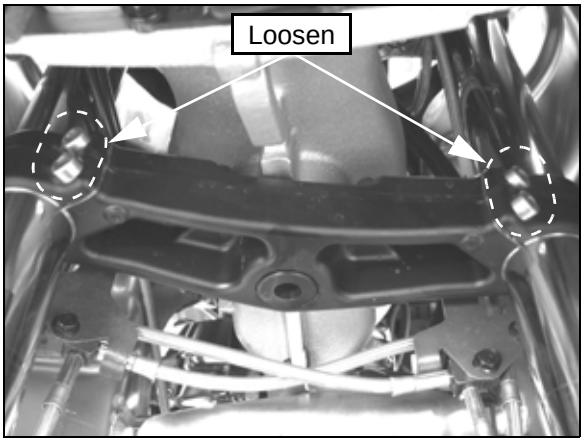

10. Slide fork legs down and out from the steering stem.

FRONT FORK DISASSEMBLY

NOTE: See Front Fork Type Identification on page 12.5. This procedure covers both TYPE 1 and TYPE 2 forks. Differences are noted for each type. Refer to Front Fork Assembly Views on page 12.7 (for TYPE 1 forks) or page 12.8 (for TYPE 2 forks). Clean the fork tubes thoroughly before disassembly.

1. Secure Fork Spring Compressor (PV-49463) vertically in a vise with drive bolt (A) UP.

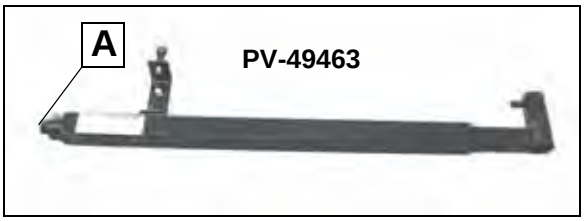

2. Loosen fork cap approximately 1 turn. Do not remove the cap.

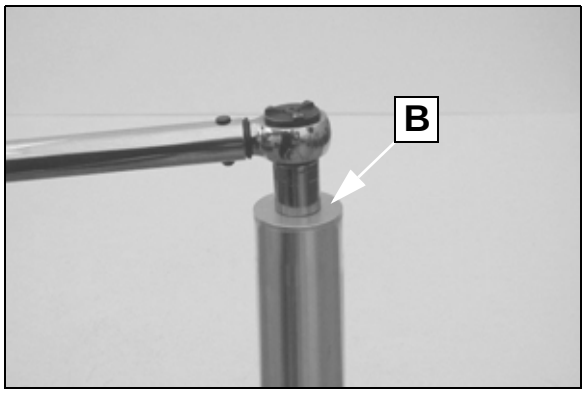

⚠ WARNING

Wear eye / face protection. Be sure spring is engaged properly with pegs of tool as you compress the spring in the following steps.

© 2009 Polaris Sales Inc.

3. Mount special socket PV-49464 in spring compressor. Center it in holding fixture with all thumb screws (C).

   - TYPE 1 forks: **17mm side of socket faces down.**
   - TYPE 2 forks: **22mm side of socket faces down.**

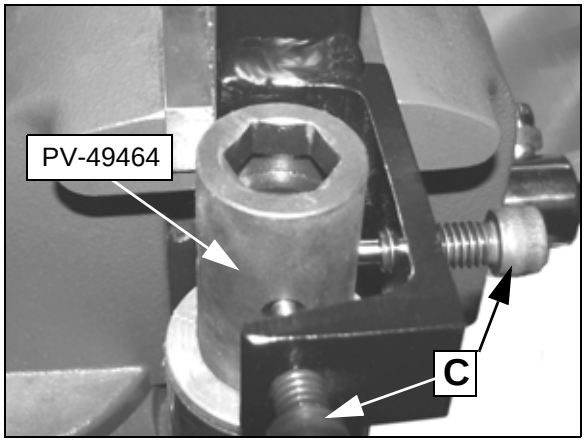

4. Place fork tube in spring compressor tool with hole in bottom of fork slider over peg on bottom of tool.

5. Adjust length of spring compressor by turning drive bolt (D) as required until fork cap is captive in socket.

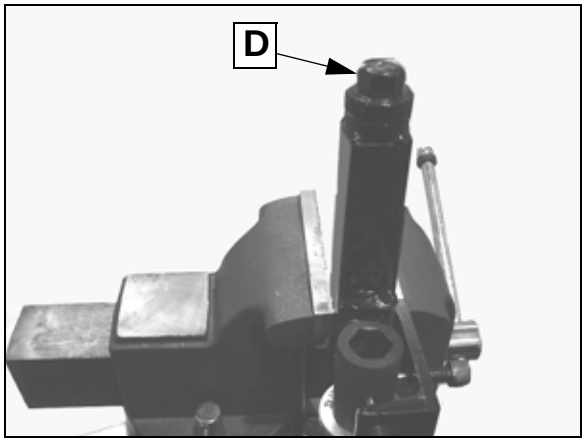

6. Rotate tube until cap is unscrewed completely from fork tube.

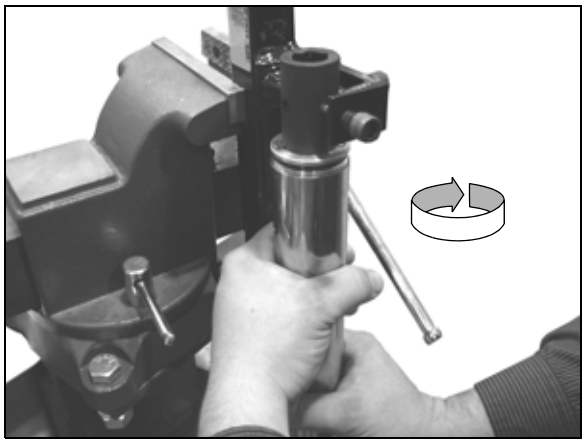

7. Back off spring compressor and remove special socket. Re-adjust length of tool so thumb screws are aligned with first or second coil at top of spring.

8. Hold fork in center and engage slot of stationary peg (E) with spring. Turn other screws in and engage spring in notch.

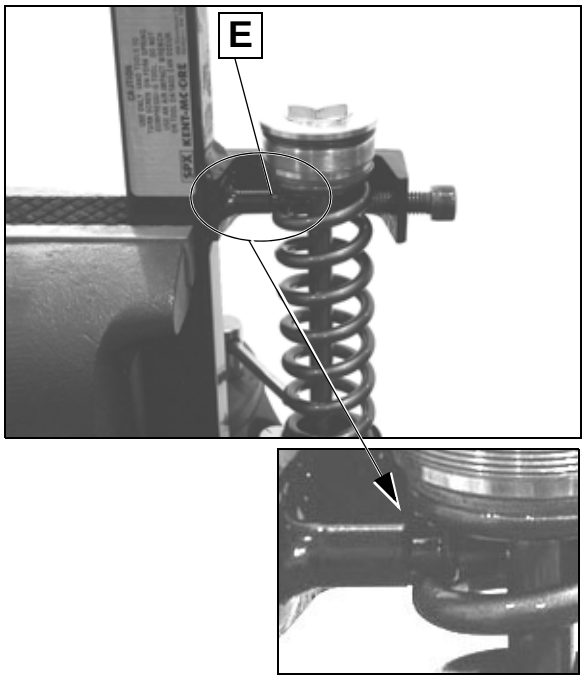

© 2009 Polaris Sales Inc.

9. Slowly compress spring by turning drive bolt of compressor until cartridge rod nut is accessible. DO NOT use air or power tools to rotate drive bolt.

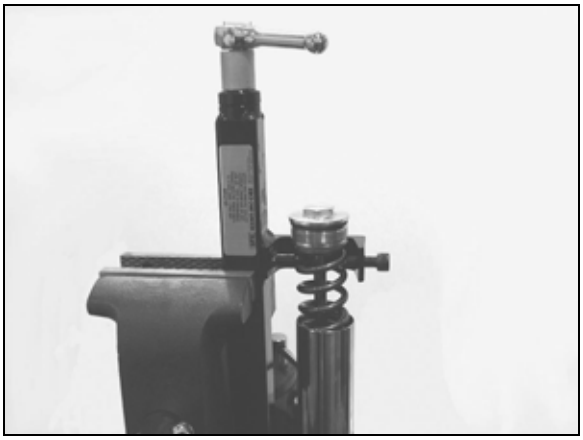

10. Hold nut and remove fork cap (F) from cartridge shaft.

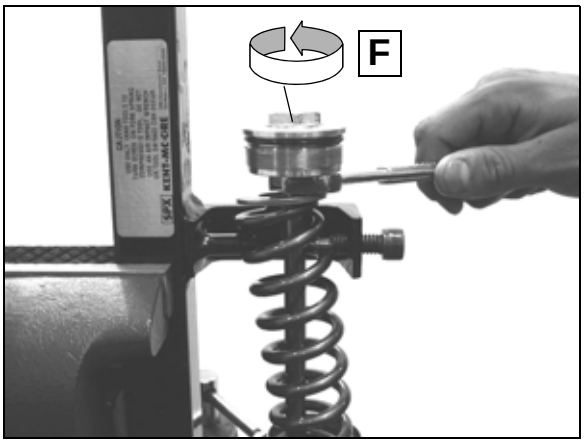

11. TYPE 2 FORKS ONLY: Remove washer (G).

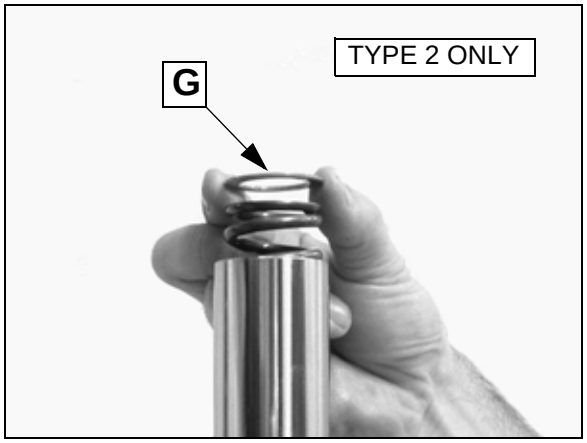

12. Remove spring from fork tube.

13. Pour fork oil out of tube assembly.

14. TYPE 1 FORKS ONLY: Remove spring pre-load spacer (H).

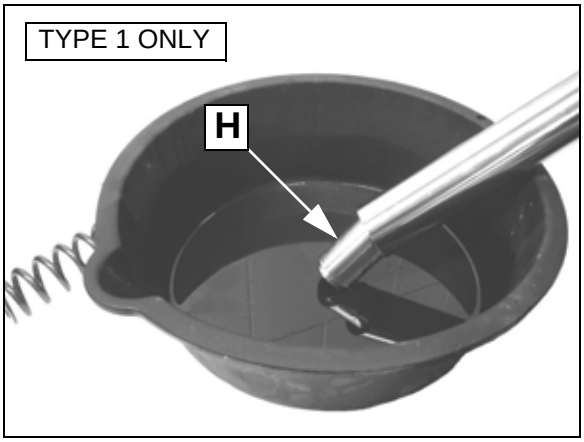

15. Move cartridge shaft through complete stroke several times to drain cartridge (until damping is gone).

IMPORTANT: Fork seal replacement is recommended at oil change. If you do not intend to replace fork seals (fork oil change only) STOP HERE and proceed to Step 14 of Front Fork Assembly. Inner fork tube removal in the following steps will damage the oil seal and require seal replacement. For complete fork disassembly proceed to Cartridge Removal / Step 16.

© 2009 Polaris Sales Inc.

Cartridge Removal

16. TYPE 1 FORKS ONLY: Remove cartridge screw and sealing washer using an extended 8 mm internal hex socket.

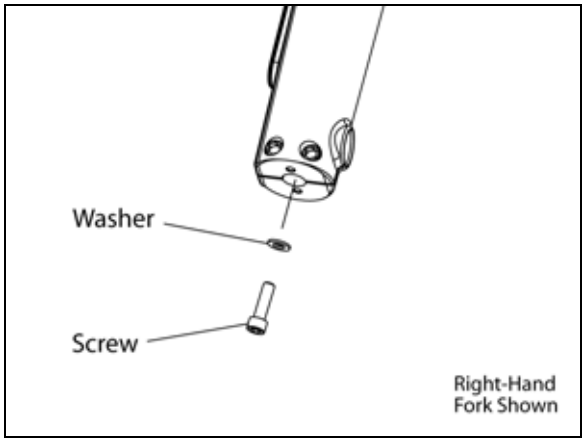

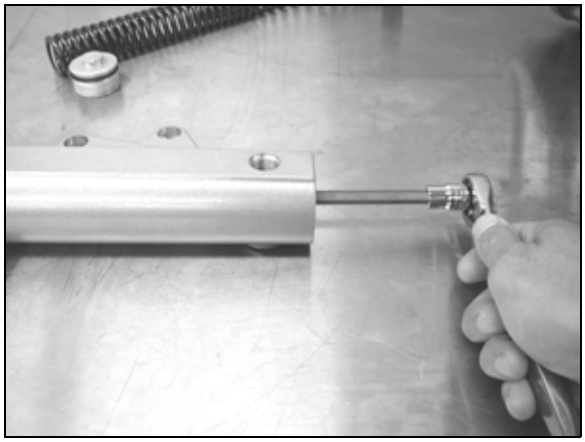

17. TYPE 2 FORKS ONLY: Hold cartridge through top of fork inner tube with octagonal end (K) of Universal Cartridge Shaft Holder PV-49452. Loosen cartridge screw with an extended 8mm internal hex socket as with Type 1 fork.

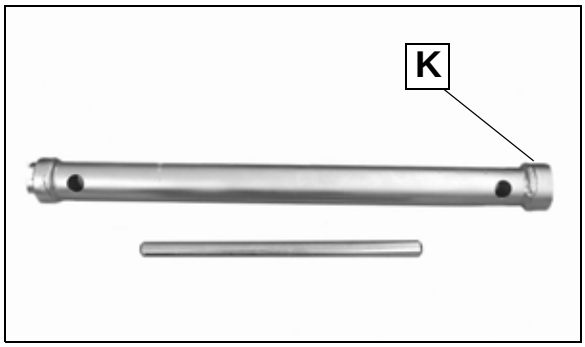

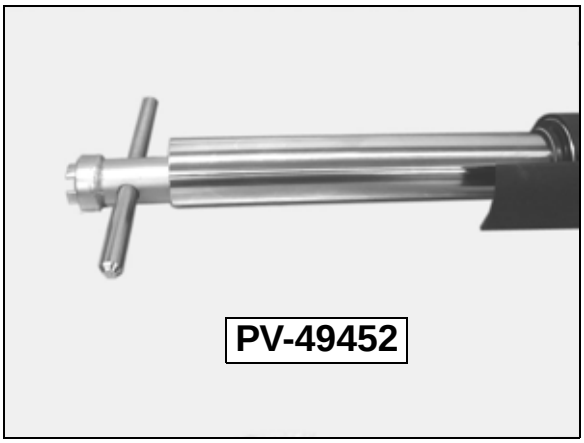

18. Remove cartridge from inner tube.

WARNING

DO NOT disassemble the cartridge. If damaged or worn, it must be replaced as an assembly.

19. To clean cartridge when removed, submerge oil holes (L) in clean cartridge fork oil and pump cartridge shaft.

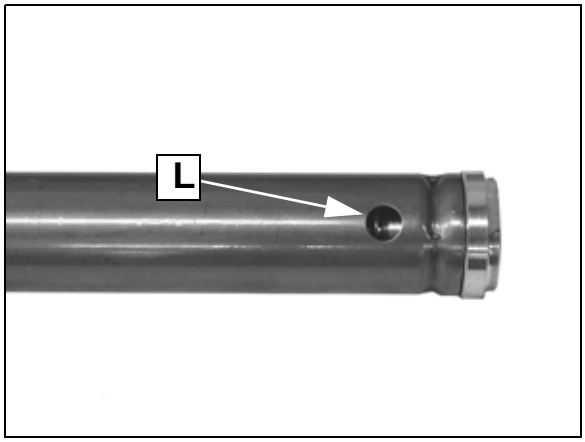

© 2009 Polaris Sales Inc.

Fork Seal Removal

20. Fully compress the fork tube. Carefully lift dust seal out of outer fork tube with a small flat screwdriver. TYPE 2 forks have access notch to remove dust seal.

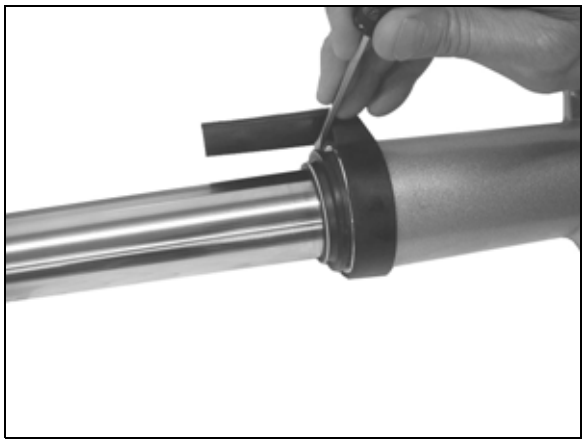

21. Remove seal retaining ring. Use care not to scratch the surface of the inner fork tube.

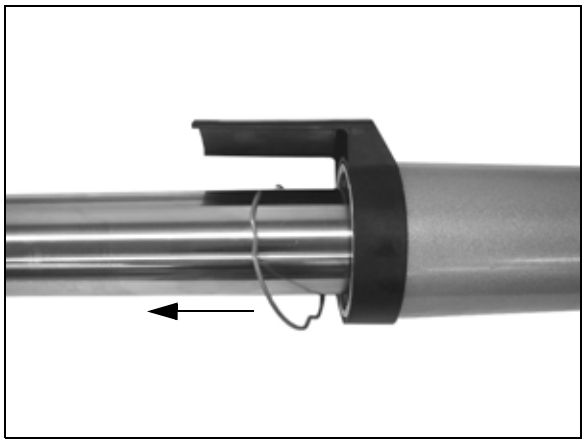

22. Push inner and outer tube together, then pull apart quickly to produce a slide hammer motion to remove the inner tube.
23. Separate the tubes.
24. Remove the lower bushing from the inner tube.

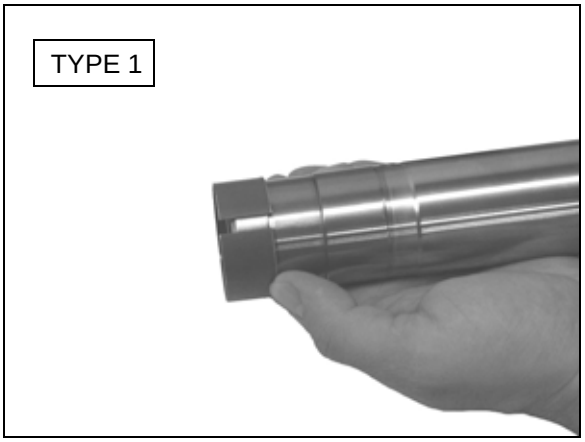

25. TYPE 2 FORKS ONLY: Remove oil lock valve (I) and bushing (J) from bottom of inner tube.

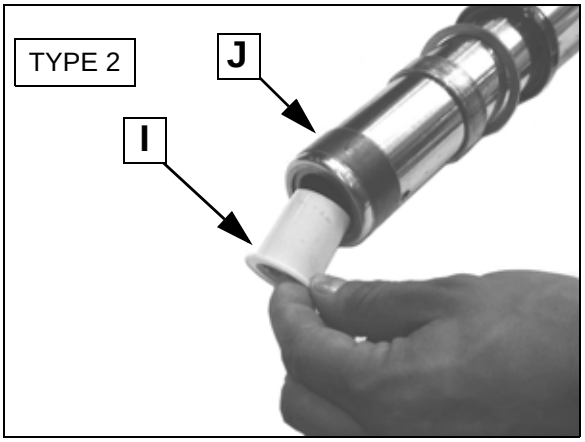

26. Protect top surface of fork slider and pry out oil seal, using care not to scratch the seal bore.

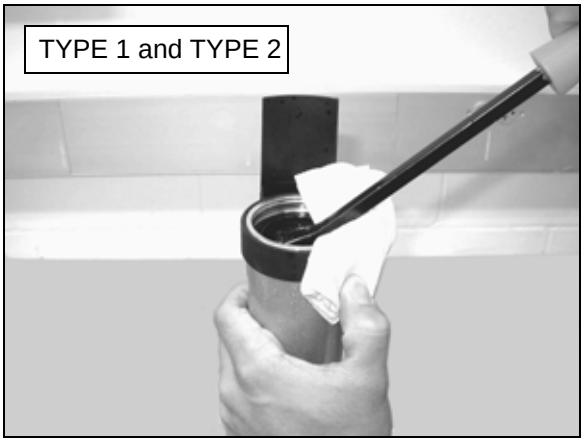

© 2009 Polaris Sales Inc.

27. Remove oil seal and backing washer.

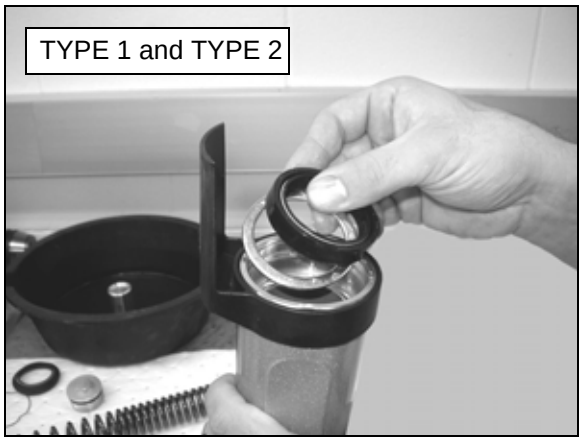

Upper Bushing Removal

28. To remove upper bushing from fork slider, re-install fork tube (with lower bushing attached) into fork slider, working the bushing carefully past the upper (slider) bushing.

29. Use a VERY LIGHT slide hammer motion to tap slider bushing out of the slider.

30. Clean tubes and drain completely. Cartridge removal is not required for seal and bushing replacement. Cartridge can be cleaned by adding clean fork oil to slider and pumping the cartridge rod in the clean oil bath. Discard fork oil used to flush the cartridge.

FRONT FORK INSPECTION

1. Inspect inner fork tube for scoring, heavy scratches, dents due to rocks or other road debris, or excessive wear. Replace tube if scratched, pitted, or dented.

2. Place fork tube in V-blocks or fixture and measure runout. Replace tube if runout exceeds service limit.

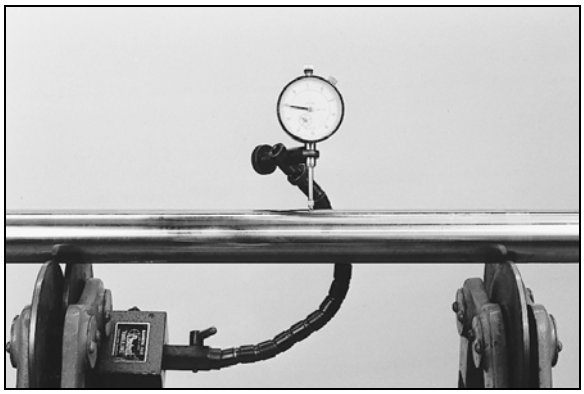

⚠ WARNING

Do not attempt to straighten bent fork tubes. Doing so will weaken the structural integrity of the forks and make the motorcycle unsafe to operate.

3. Inspect fork slider (outer tube) for dents, cracks, or other damage. Assemble inner and outer fork tube with new bushings and move inner tube through complete travel range. Check for resistance or binding. Replace slider if binding or resistance is evident, or if damaged.

4. Inspect cartridge by moving cartridge shaft through travel range. If binding is evident, replace the cartridge assembly.

© 2009 Polaris Sales Inc.

FRONT FORK ASSEMBLY

NOTE: Differences in assembly procedure are noted for TYPE 1 and TYPE 2 forks as required. Refer to Front Fork Assembly Views on page 12.7 (for TYPE 1 forks) or page 12.8 (for TYPE 2 forks). Clean all parts prior to assembly.

1. Lubricate and install new upper bushing into fork slider. Position gap (A) to left or right side (arrow).

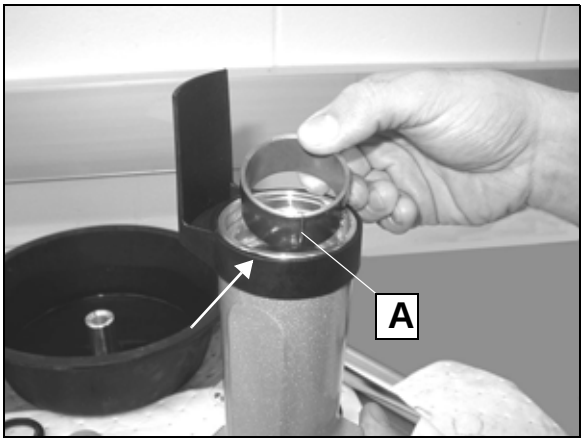

2. Lubricate and install a new lower bushing (B) on inner fork tube.
   TYPE 2 ONLY: Install oil lock valve (C) in bottom of fork tube (tapered side to tube as shown).

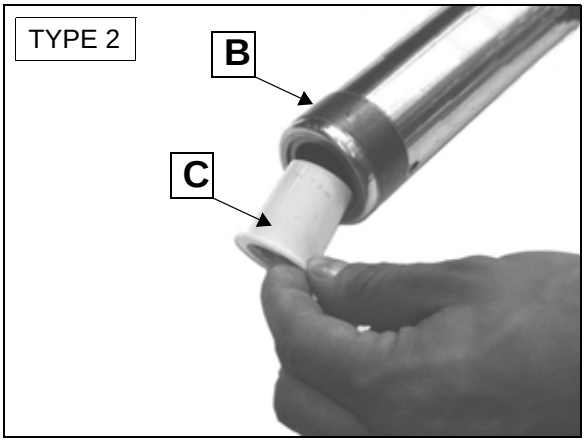

3. Rotate bushing so gap (D) will be opposite the gap of slider bushing previously installed (arrow).

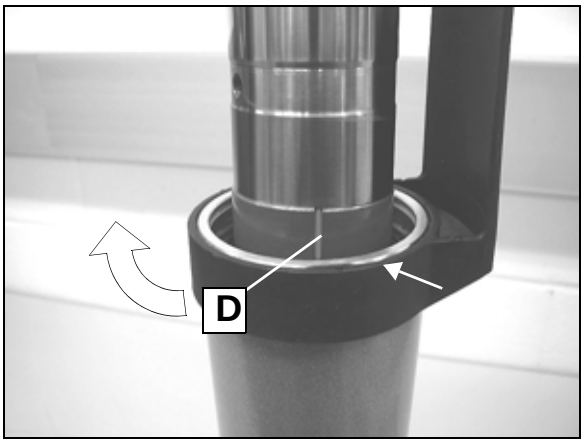

4. Apply a light film of fork oil to outside edge and inside seal lips of new oil seal.

NOTE: Install oil seal with markings facing UP (toward top of tube and retaining ring).

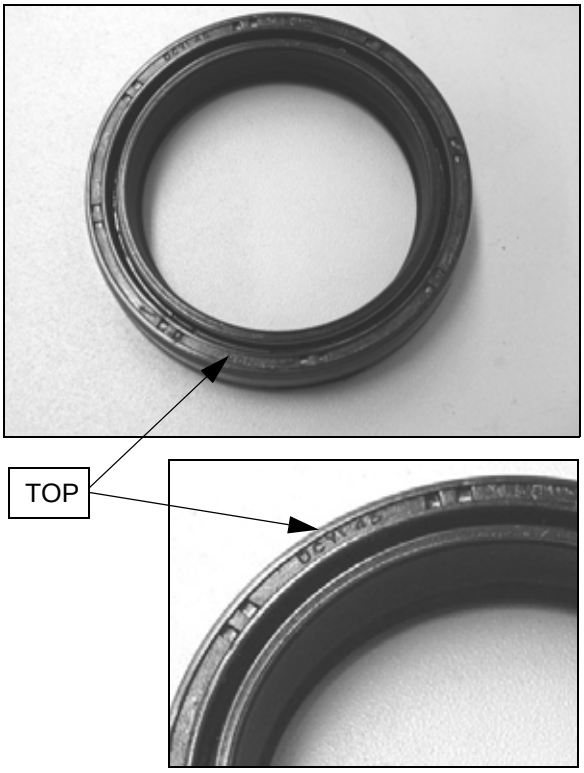

© 2009 Polaris Sales Inc.

5. Lubricate the surface of the inner fork tube and slide backing washer and new oil seal down tube and into outer fork leg.

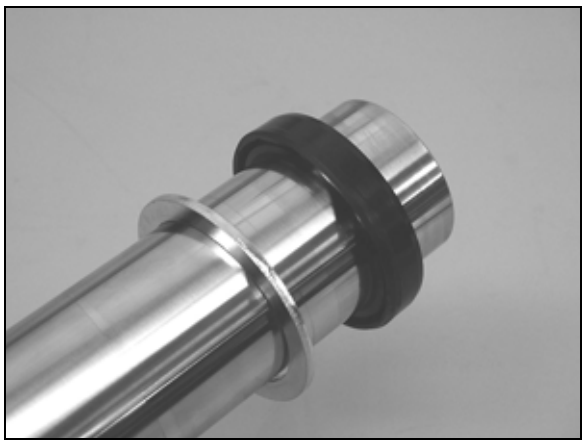

6. Use PV-49494 to install oil seal until seated. Be sure top edge of seal is past (below) retaining ring groove.

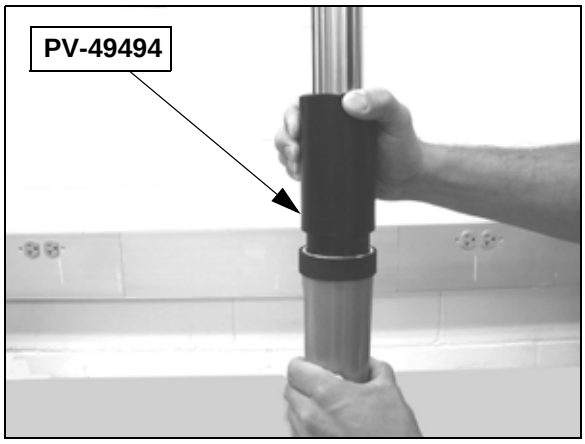

7. Install a new retaining ring (E) into groove of fork tube. Be sure it is completely seated around the entire circumference of the groove.

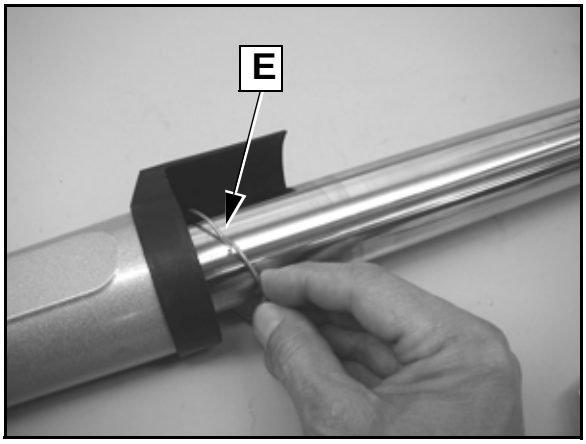

8. Wipe away any excess grease or oil. Install dust seal (use opposite end of fork seal driver PV-49494) until fully seated in outer tube.

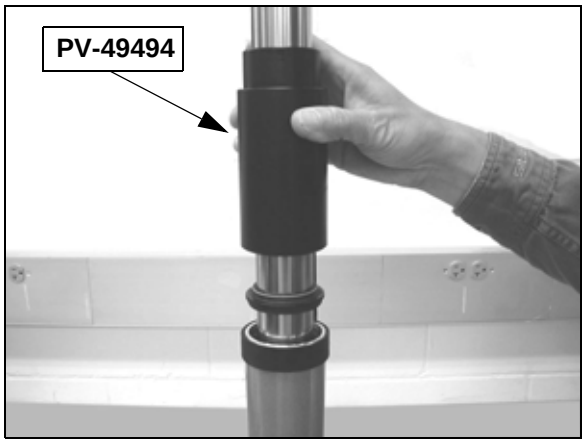

Cartridge Installation

9. Be sure screw threads in bottom of cartridge are clean and not damaged.
10. Place cartridge assembly into fork slider, and carefully align bottom of cartridge with recess in bottom.
11. Install a new cartridge screw and a new seal washer.

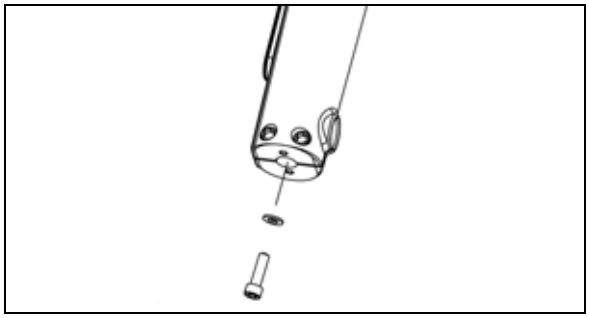

12. TYPE 2 ONLY: Hold cartridge with PV-49452.
13. Torque cartridge screw:
    TYPE 1 - 30.0 Nm (22.0 lb-ft).
    TYPE 2 - 20.0-25.0 Nm (14.8-18.5 lb-ft).

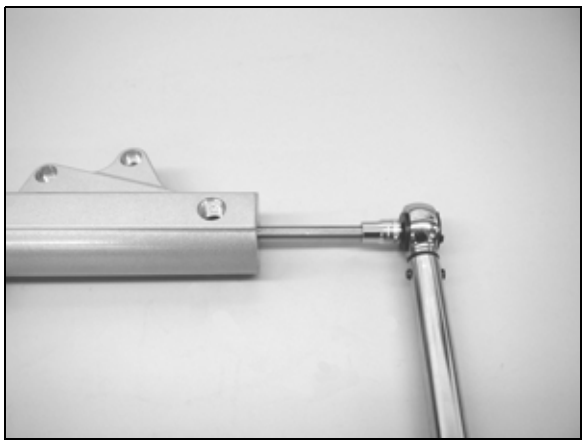

© 2009 Polaris Sales Inc.

Oil Filling / Cartridge Air Bleeding

14. Tip fork leg at an angle to reduce air bubbles. Slowly add about 350 cc of Victory fork oil.
    TYPE 1: P/N 2874828
    TYPE 2: P/N 2874568

NOTE: The oil quantity slightly exceeds the capacity of the fork. Final fork oil level must be adjusted correctly as outlined later in this procedure.

15. Set fork leg upright.

16. Lift outer tube up to top of travel range.

17. Seal top of tube with your hand and push downward against air pressure. Hold for 10-15 seconds. This will help force trapped air from cartridge and tube.

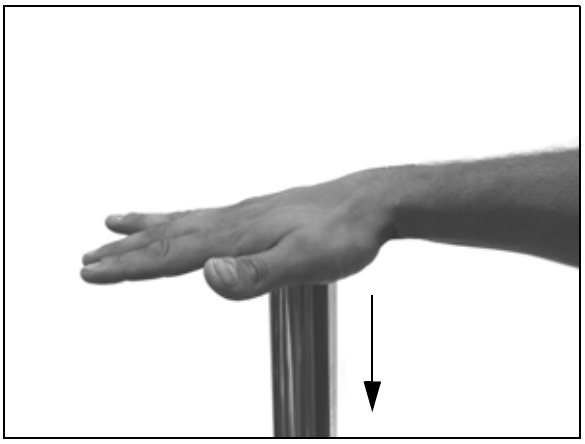

18. Mount fork assembly upright in a soft jawed vise by brake caliper mounts on slider.

19. Screw Damper Rod Extension Tool PV-49453 onto cartridge rod.

20. Bleed cartridge by moving shaft up and down to purge air. Begin with small strokes, increasing stroke length until all air is removed and damping is smooth and consistent.

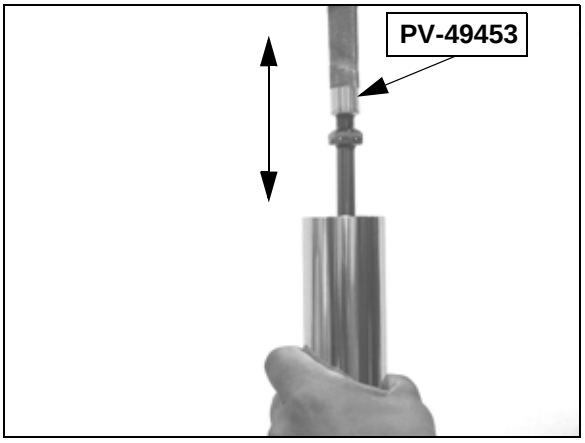

21. Slowly compress inner fork tube (F) and cartridge rod rod (G) until they stop (at bottom of travel) and remove damper rod extension tool.

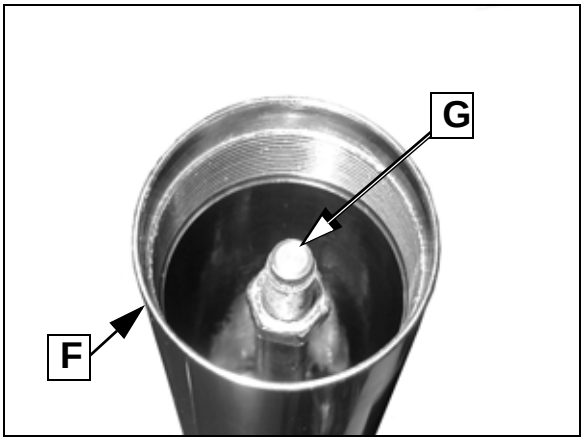

22. Loosen thumb screw on Oil Level Adjustment Tool PV-59000-A and slide stop plate to adjust tube to length of specified oil level:

TYPE 1 Fork Oil Level (from top of tube):
255 mm (10.04")
Set level in tube with spring and pre-load spacer removed, and inner tube and damper rod (cartridge rod) fully compressed.

TYPE 2 Fork Oil Level (from top of tube):
136 mm (5.35")
Set level in tube with spring removed, and inner tube and damper rod (cartridge rod) fully compressed.

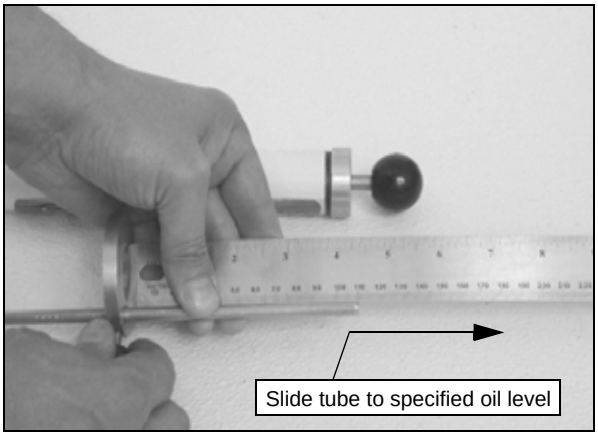

© 2009 Polaris Sales Inc.

23. Insert fork oil level tool into fork. Be sure fork leg is standing upright and fork tube is fully compressed.
24. Draw excess oil out to the specified level.

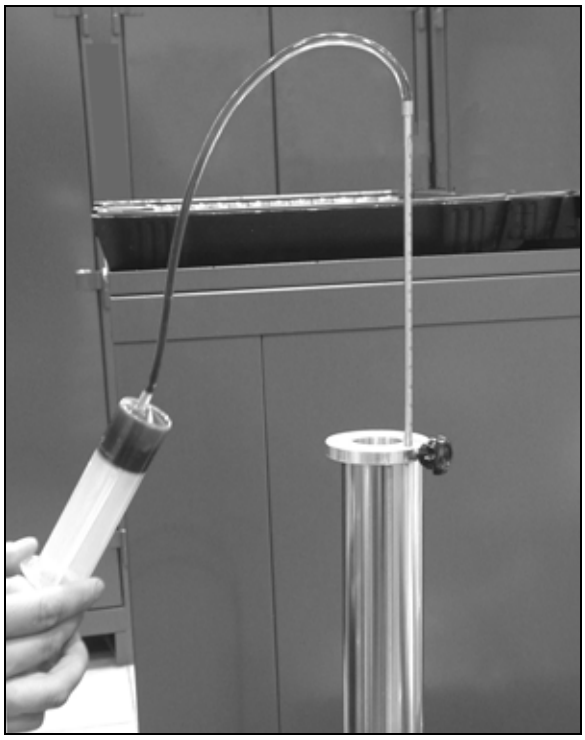

25. **TYPE 1 ONLY:** Install pre-load spacer (H) with spring seat facing UP.
26. Install spring with tightly wound coils (I) down.

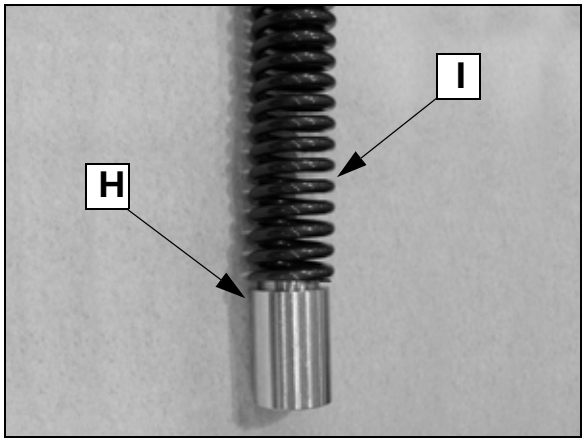

27. Mount tube in spring compressor and adjust thumb screws to catch spring as outlined for disassembly (page 12.19).

⚠ WARNING

Wear eye / face protection. Be sure spring is engaged properly with pegs of tool as you compress the spring in the following steps.

28. Attach damper rod extension tool and hold damper rod up.
29. Carefully compress spring until fork cap threads on top of damper rod are visible.

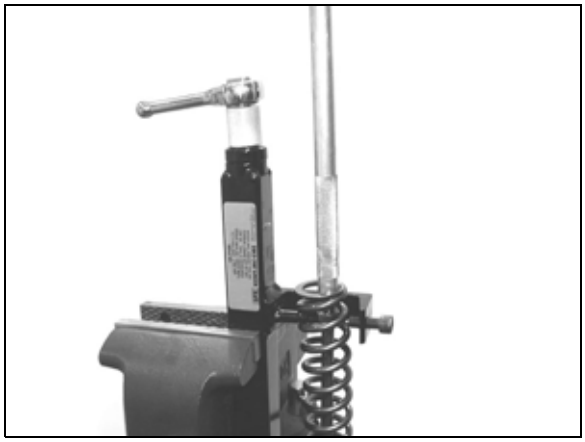

30. Remove extension tool and hold damper rod up, clear of spring.
31. Screw jam nut (J) fully onto damper rod until bottomed.
32. TYPE 2 ONLY: Place backing washer (K) on top of spring.

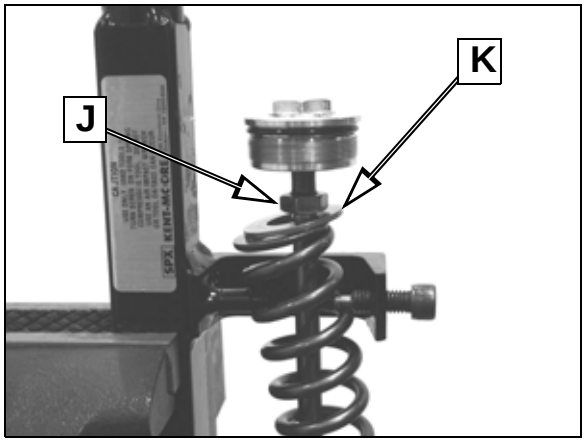

33. Place a new O-ring on fork cap and screw cap FULLY onto damper rod for *maximum* thread engagement.

© 2009 Polaris Sales Inc.

34. Hold cap and screw jam nut up damper rod until it stops against cap.

35. Hold jam nut and torque fork cap.

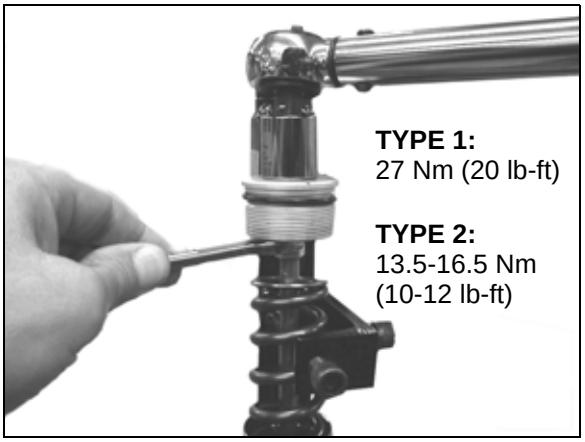

36. Slowly release spring pressure and remove fork leg from spring compressor.

37. Install special socket in compressor as outlined for disassembly.

38. Slowly compress fork tube assembly with drive nut until fork cap enters the outer tube, and threads start to make contact.

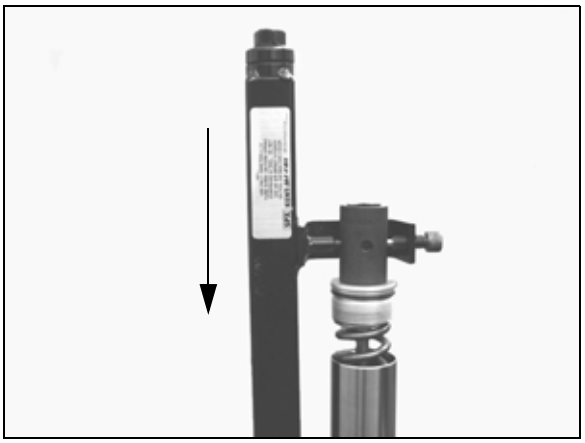

39. Rotate outer tube to start cap. Use care to avoid thread damage.

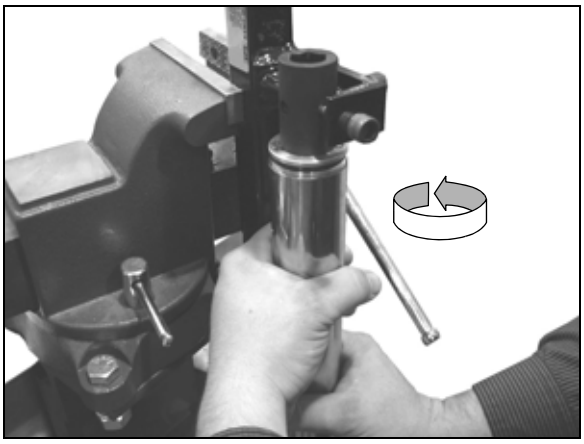

40. After cap thread is started, continue to turn tube and adjust spring compressor pressure as required until cap is fully seated against top of outer tube.

41. Tighten fork cap to outer tube. 68 Nm (50 lb-ft).

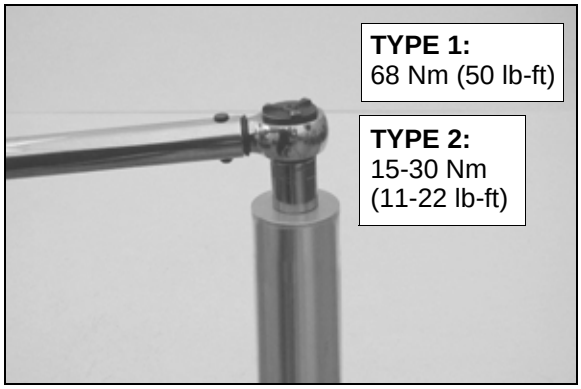

FORK GUARD REPLACEMENT

1. Protect surface of fork slider.
2. Use a light tapping motion with a soft face hammer to remove the guard.

© 2009 Polaris Sales Inc.

FRONT FORK TUBE INSTALLATION

Also refer to illustration on page 12.6.

1. Clean the fork tubes and the clamping surfaces of the triple clamps to remove any oil or grease.

2. Install one fork tube assembly into lower triple clamp.

3. Continue to slide tube through lower triple clamp and into upper triple clamp. Stop when the inner fork tube or bottom of the fork cap is flush with the top of the upper triple clamp.

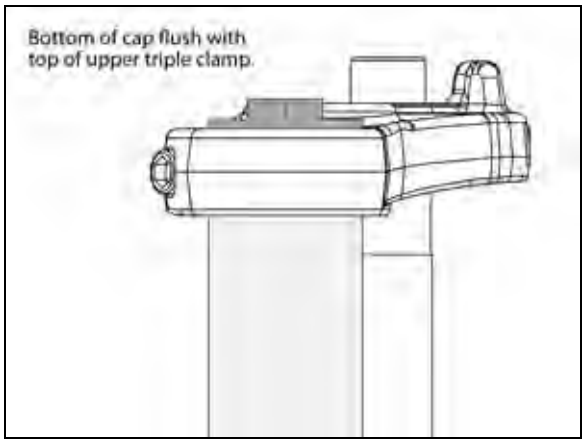

NOTE: The bottom of the fork cap should be flush with the upper triple clamp.

4. Torque upper triple clamp pinch bolt to **23 Nm (17 lb-ft)**.

5. Torque lower triple clamp bolts, starting with lower bolt, then upper bolt to **23 Nm (17 lb-ft)**.

6. Repeat torque on both lower triple clamp bolts.

7. Repeat steps 1 through 5 for the other fork tube.

8. Install front fender assembly (page 12.4). Torque mounting screws to **11 Nm (8 lb-ft)**.

9. Install front wheel (page 12.17).

10. Install brake calipers (page 12.17). Torque mounting bolts to **42 Nm (31 lb-ft)**.

11. Inspect all bolts for proper torque.

12. Lower front end of motorcycle to the ground and test front suspension / fork operation.

© 2009 Polaris Sales Inc.

ASSEMBLY VIEW, STEERING STEM / TRIPLE CLAMPS

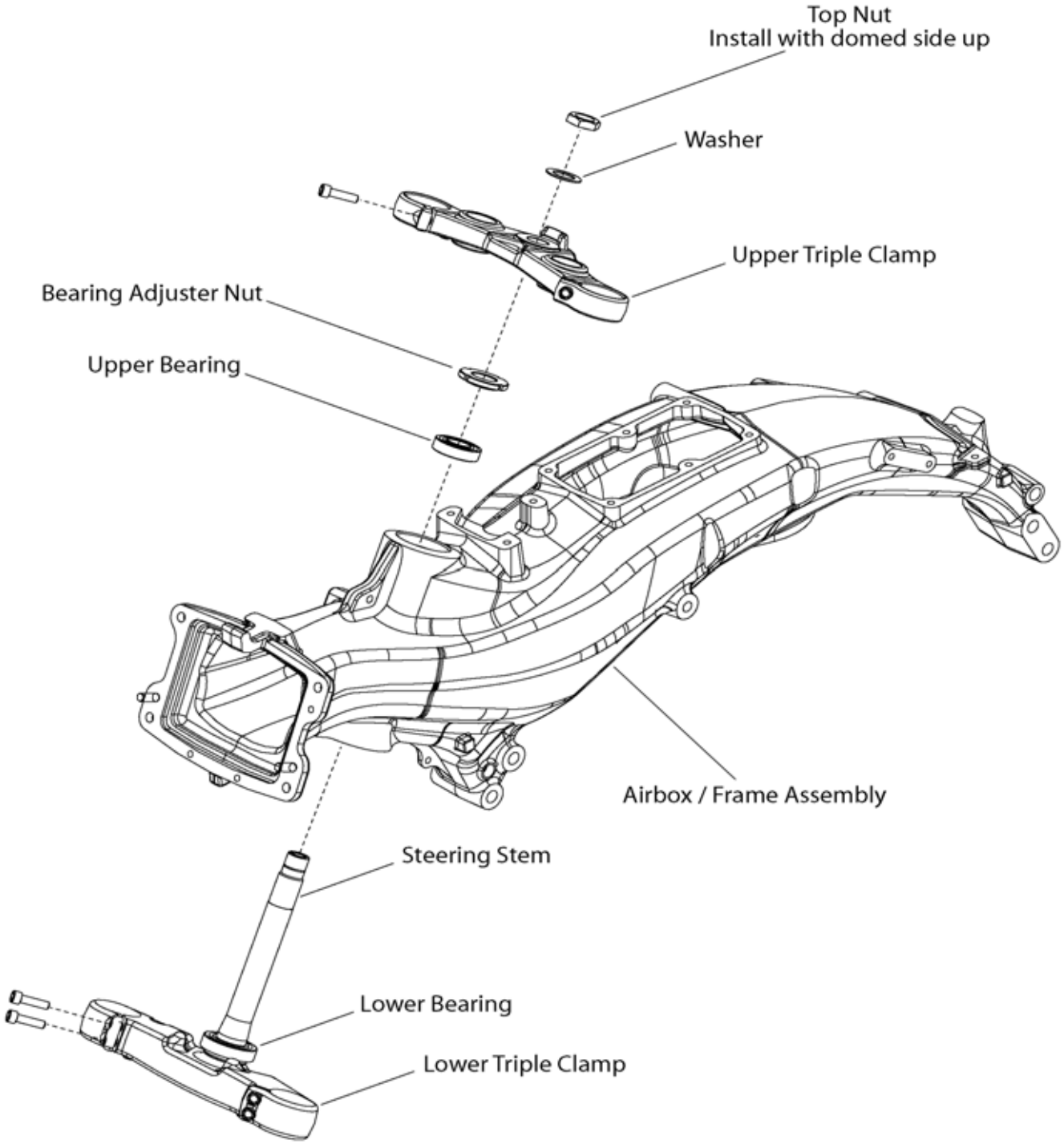

© 2009 Polaris Sales Inc.

TRIPLE CLAMP REMOVAL

1. Elevate front of machine so that front wheel can be removed. Support machine securely in an upright position.

> ⚠ CAUTION
>
> Take precautions so that the motorcycle is securely supported when the tire is off the ground.

2. Remove instrument bezel and bridge console (see Chapter 3).

3. Remove front wheel (page 12.13).

4. Loosen upper triple clamp nut (steering stem nut).

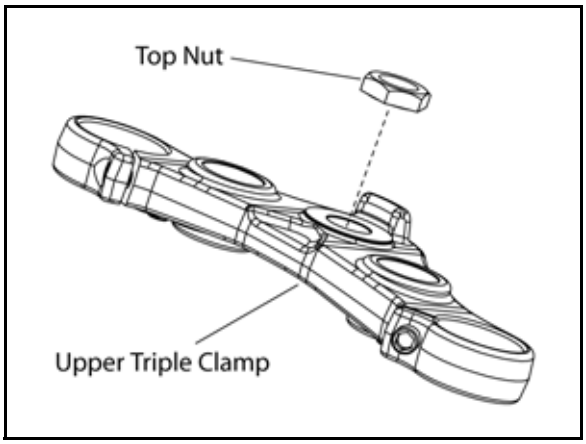

5. Remove fork tubes (page 12.18).

6. Remove handlebars (page 12.12).

7. Remove top nut and slide upper triple clamp off steering stem.

NOTE: Support lower triple clamp while removing stem nut.

8. Remove adjustment nut from steering stem with Victory spanner socket (PV-43508).

9. Remove upper bearing from frame (see assembly view page 12.31).

10. Remove lower triple clamp with steering stem and lower bearing.

11. Inspect bearings and bearing races for pitting, excessive wear or damage.

© 2009 Polaris Sales Inc.

TRIPLE CLAMP INSTALLATION / STEERING HEAD BEARING ADJUSTMENT

Refer to page 12.6 for assembly view and torque specifications.

1. Inspect both upper and lower bearing races for pitting, dents, or worn surface.

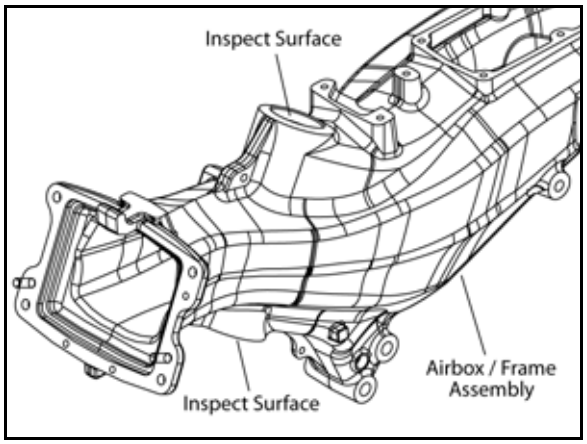

2. Replace bearings and races as a set.

3. Apply Victory All Purpose grease to lower bearing and install lower triple clamp into frame.

4. Place upper bearing over steering stem and into frame.

5. Place bearing adjustment nut (shoulder side down) on steering stem and tighten with a Victory spanner socket (PV-43508) to **39.3 Nm (29 lb-ft)**.

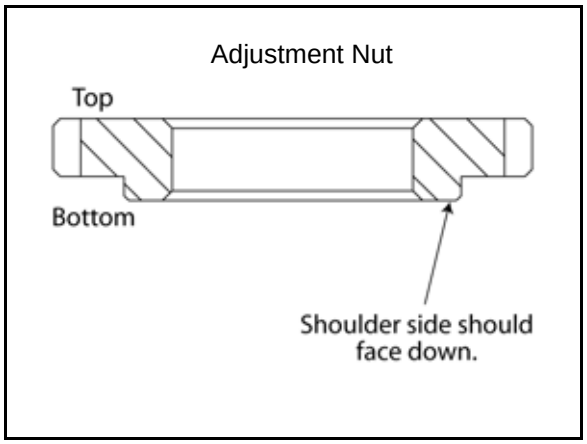

6. Turn lower triple clamp from lock to lock five times.

7. Loosen adjuster nut 90 degrees (1/4 turn).

8. Place upper triple clamp over steering stem.

9. Install washer and top nut (domed side up) onto stem and tighten nut hand tight.

NOTE: Nut will be torqued after fork tubes are installed.

10. Slide fork tube through lower triple clamp and into upper triple clamp. Align bottom edge of fork cap with top edge of upper triple clamp and hold in position.

11. Tighten top triple clamp pinch bolt enough to hold tubes in place. Leave lower triple clamp pinch bolts *loose*.

12. Use a 30 mm socket to torque steering stem nut to **97.6 Nm (72 lb-ft)**.

NOTE: CHECK STEERING BEARINGS at this time. Pull firmly on fork tubes with a front-to-rear motion. If movement (play) can be felt in steering bearings, disassemble and go back to Step 8. Tighten steering stem adjuster nut an additional 5 degrees, and reassemble following Steps 8-14. Repeat this procedure until no play can be felt.

13. Verify fork tube height in upper triple clamp. Fork cap seam should be aligned with top edge of fork tube bore on upper triple clamp.

14. Torque upper triple clamp pinch bolts (left and right side) to 23 Nm (17 lb-ft).

15. Torque bottom bolts on lower triple clamp to 23 Nm (17 lb-ft).

16. Torque top bolts on lower triple clamp to 23 Nm (17 lb-ft).

17. Repeat torque on bottom and top bolts of lower triple clamp.

18. Install handlebars (page 12.12).

19. Install front wheel (page 12.17).

20. Install instrument bezel and bridge console (see Chapter 3).

21. Verify all fasteners are installed and properly torqued.

© 2009 Polaris Sales Inc.

STEERING STEM BEARING REMOVAL (TYPICAL EXAMPLE)

1. Mask the top cosmetic surface of the triple clamp to protect it from damage.

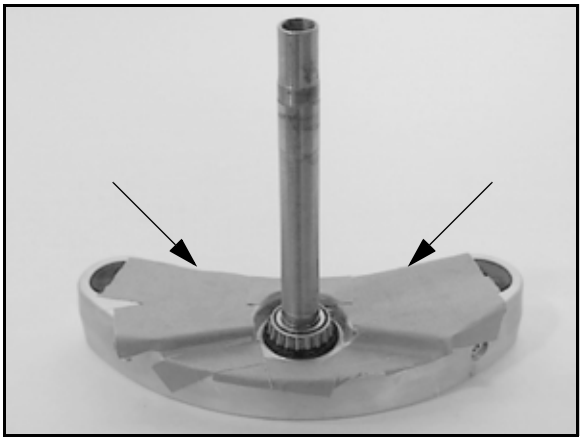

2. Remove lower bearing cage and rollers. Use a cold chisel to cut through the cage, then use a pliers to remove the cage.

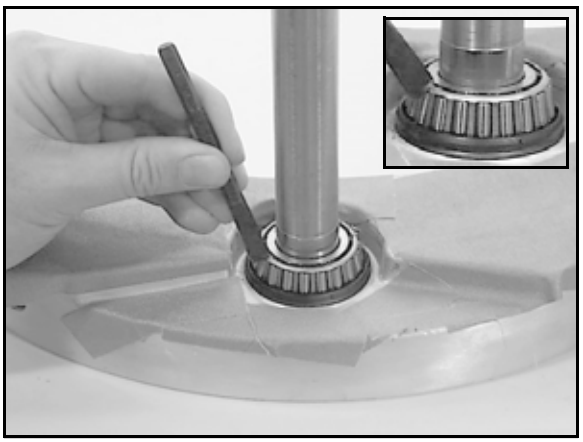

CAUTION

Wear eye protection. Use care not to damage steering stem bearing surface during bearing removal process.

3. Drive inner bearing race upward until clear of recess in lower triple clamp.

4. Install two long bolts into bearing collar. The two long bolts should be threaded into bearing collar approximately 8 turns each or until flush with the bottom of the tapped hole.

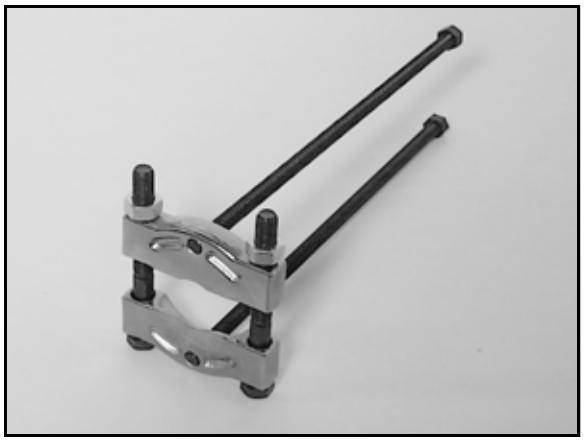

CAUTION

Do not turn the long bolts in too far or the lower triple clamp finish may be damaged.

5. Install bearing collar onto lower bearing inner race. The knife edge of bearing collar must catch under top lip of inner race. Torque bearing collar nuts to **13.6 Nm (10 lb-ft)**.

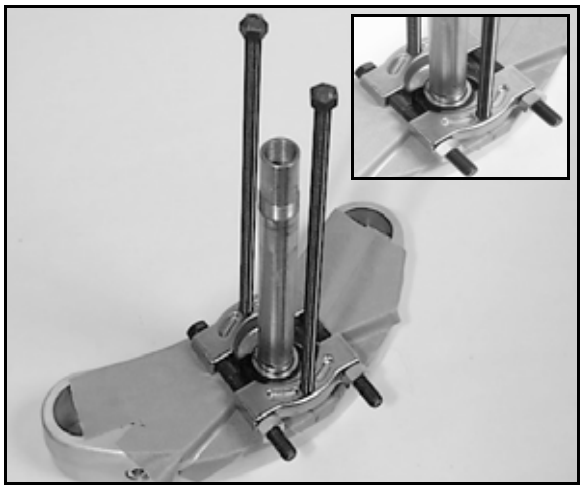

© 2009 Polaris Sales Inc.

6. Place spacer (A) and puller bracket (B) on top of steering stem.

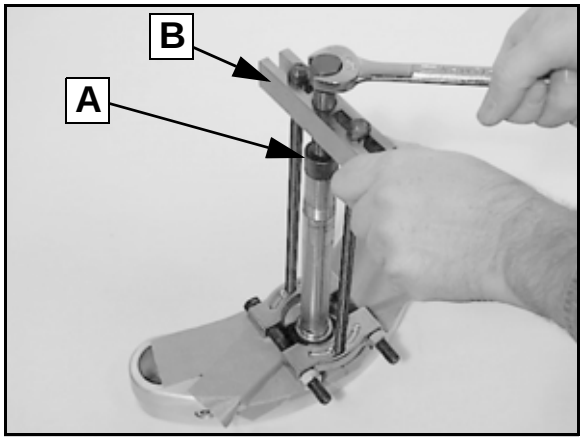

7. Install puller bolt and turn clockwise to remove bearing race from stem. Hold puller bracket to prevent it from turning and bending the long bolts.

STEERING STEM BEARING INSTALLATION (TYPICAL EXAMPLE)

1. Thoroughly grease new bearing (grease both upper and lower bearings at this time). Ensure that the grease is packed well into the bearing cage and that a thin film of grease completely covers all bearing elements.

Victory All Purpose Grease: 2872187

2. Clean the stem thoroughly and inspect bearing support surface for nicks or damage.

3. Install lower bearing over steering stem.

4. Place bearing driver over stem. Place lower triple clamp, with bearing driver, into hydraulic press.

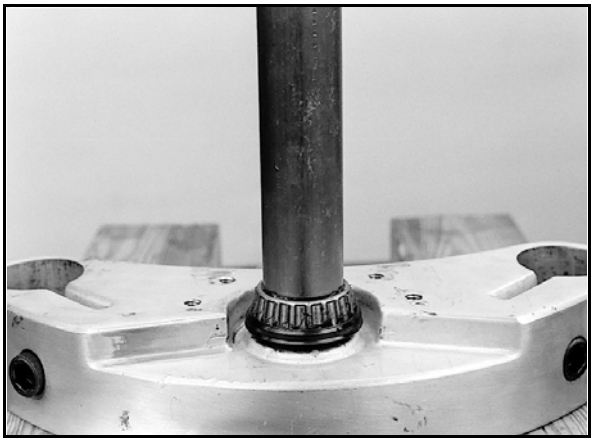

5. Support the lower triple clamp directly below the steering stem with a suitable press plate.

6. Press lower bearing down until it is firmly seated.

⚠ CAUTION

Make sure bearing driver contacts the inner race of the bearing only, not the cage or the rollers.

© 2009 Polaris Sales Inc.

LOWER BEARING RACE REMOVAL

1. Remove triple clamps (page 12.32).
2. Drive bearing race evenly out of frame using a long flat punch through access notch.

LOWER BEARING RACE INSTALLATION

1. Clean bearing race bore in frame.
2. Apply a light film of grease to outer surface of new lower bearing race.
3. Load lower bearing race onto special tool with tapered side facing DOWN (Fig. 1).

Steering bearing race installation tool PV-43515

4. Insert tool from bottom of steering neck.
5. Place bearing plate in top bearing cavity (top bearing removed).
6. Apply anti-seize compound to the threads of the nuts and center screw. Apply anti-seize compound to faces of each washer, and to the tool bearing.
7. Loosely assemble the tool bearing, washer, and nut onto center screw.

⚠ CAUTION
Make sure bearing race starts straight in bearing bore.

8. Slowly tighten tool to draw lower bearing race into bearing bore of frame.
9. Continue to tighten nuts on center screw until lower race is fully seated in bore.
10. Remove tool and clean lower race and upper bearing bore thoroughly.
11. Assemble triple clamp and adjust bearing lock nut (page 12.33).

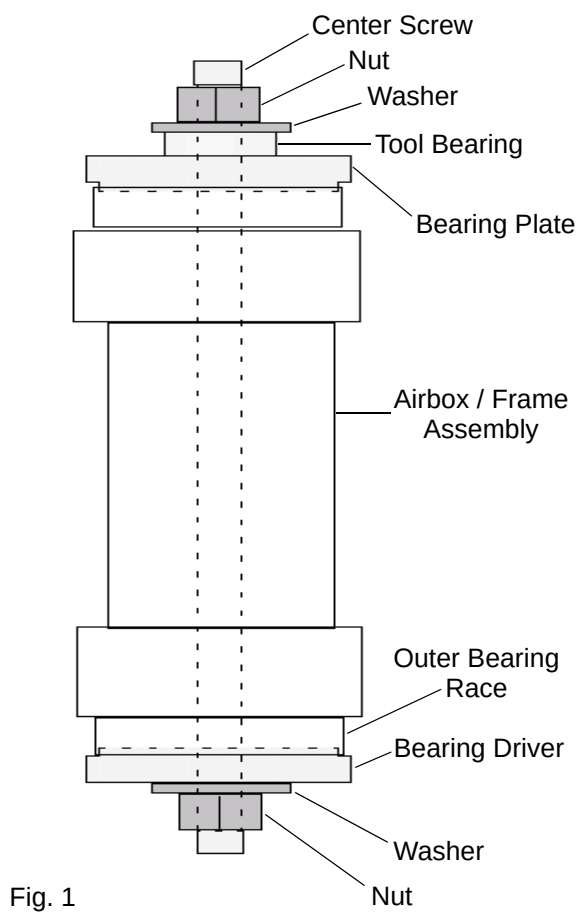

Fig. 1

© 2009 Polaris Sales Inc.

TROUBLESHOOTING

TROUBLESHOOTING

PROBLEM	POSSIBLE CAUSE	REPAIR RECOMMENDED
Heavy Steering	Steering Stem Nut Over Tightened	Adjust
	Front Tire Damaged or Worn	Replace
	Low Tire Pressure	Inflate to specification
	Damaged / Worn Steering Stem Bearings or Races	Replace
	Bent Steering Stem	Replace
Pulls to One Side or Wanders	Damaged Steering Stem Bearings or Races	Replace
	Low Tire Pressure	Inflate to specification
	Steering Stem Nut Over Tightened or Under Tightened	Torque to specification
	Rear Wheel Not Aligned Correctly	Align
	Bent Front Axle	Replace
	Damaged or Excessively Worn Front Tire / Incorrect Tire	Replace
	Damaged / Worn Wheel Bearings	Replace
	Damaged / Worn Swing Arm Bearings	Replace
	Loose Swing Arm Pivot Nut	Torque to specification
	Bent Frame or Swingarm	Replace
Handlebars Oscillate (Wobble)	Incorrect Tire Pressure / Tire Type	Correct
	Tire Mounted Incorrectly	Check Mounting and Balance
	Damaged Tire / Worn Tire	Replace
	Loose Steering Stem Nut	Torque to specification
	Suspension Adjusted Incorrectly	Adjust Properly For Load
	Bent Front Axle	Replace
Front Wheel Oscillates (Wobbles)	Bent Front Rim	Replace
	Damaged Front Wheel Bearings	Replace
	Damaged or Incorrect Tire	Replace
	Loose Axle or Axle Pinch Bolts	Torque to specification
	Fork Tube Height Unequal (L&R)	Install Correctly
	Fork Oil Level Unequal	Set Correctly
	Fork Spring Free Length Different Between Right & Left	Replace
	Wheel Assembly Out-of-Balance	Balance
	Low Tire Pressure	Inflate to specification
Noise In Front Suspension	Worn Fork Bushings	Rebuild Forks
	Low Fork Fluid	Determine Cause/Replace Fork Oil
	Loose Fasteners	Torque to specification
	Loose Steering Stem Bearings	Determine Cause/Correct
	Fender, Brake Lines, Brake Caliper	Determine Cause/Correct

© 2009 Polaris Sales Inc.

TROUBLESHOOTING (cont.)

PROBLEM	POSSIBLE CAUSE	REPAIR RECOMMENDED
Front Suspension Too Soft	Weak Fork Springs	Replace
	Low Fork Oil Level	Determine Cause/Replace Fork Oil
	Wrong Weight Fork Oil	Replace
	Contaminated and/or Deteriorated Fork Oil	Replace
	Low Tire Pressure	Set Correctly
Front Suspension Too Hard	Tire Pressure Too High	Set Correctly
	Bent Fork Tubes	Replace
	Incorrect Fork Oil	Replace
	Fork Oil Level Too High	Set Correctly
	Plugged Oil Passages	Rebuild Front Forks
	Damaged Sliders or Fork Tubes	Replace
	Forks Binding, Incorrect Assembly Front Fender and/or Front Wheel	Correct
Wheel Turns Hard	Damaged Wheel Bearings	Replace
	Front Axle Bent	Replace
	Brake Dragging (Hydraulic or Mechanical Problem)	Repair as Necessary
	Brake Dragging (Bent Disc)	Replace
	Improper Assembly After Repairs	Correct as Necessary

© 2009 Polaris Sales Inc.

CHAPTER 13
REAR WHEEL & SUSPENSION

GENERAL INFORMATION 13.2
WARNINGS AND PRECAUTIONS. 13.2
TIRE PRESSURE 13.2
TIRE PRESSURE TABLE. 13.2
SPECIAL TOOLS 13.2
SPECIAL TOOLS 13.2
SPECIFICATIONS. 13.3
SPECIFICATIONS - REAR WHEEL AND SUSPENSION 13.3
ASSEMBLY VIEWS & TORQUE 13.4
ASSEMBLY VIEW - REAR AXLE & ADJUSTERS 13.4
ASSEMBLY VIEW - SWINGARM & SUSPENSION 13.5
REAR WHEEL - CAST 13.6
REAR WHEEL - BILLET 13.7
REAR WHEEL SERVICE 13.8
REAR WHEEL REMOVAL 13.8
REAR AXLE INSPECTION. 13.9
REAR WHEEL INSPECTION 13.10
REAR WHEEL BEARING INSPECTION 13.10
WHEEL BEARING REMOVAL (TYPICAL) 13.10
WHEEL BEARING INSTALLATION 13.12
BRAKE DISC REMOVAL 13.14
BRAKE DISC INSTALLATION 13.14
REAR SPROCKET REMOVAL. 13.14
REAR SPROCKET INSTALLATION. 13.14
REAR WHEEL INSTALLATION 13.15
REAR SHOCK 13.17
REAR SHOCK SERVICE DATA. 13.17
REAR SHOCK REMOVAL 13.18
REAR SHOCK AND PIVOT INSPECTION. 13.19
SHOCK ABSORBER INSTALLATION 13.20
SWINGARM SERVICE 13.21
SWING ARM REMOVAL 13.21
SWING ARM BUSHINGS / BEARING REPLACEMENT 13.22
SWING ARM INSTALLATION 13.23
TROUBLESHOOTING. 13.24
TROUBLESHOOTING 13.24

© 2009 Polaris Sales Inc.

GENERAL INFORMATION

WARNINGS AND PRECAUTIONS

WARNING

This motorcycle was produced with the designated tires as original equipment. The testing to ensure stability and superior handling was done using the OEM tires. Using non-OEM tires could result in poor motorcycle stability and handling, which can lead to a crash resulting in serious injury or death.
Use only the recommended tires inflated to the recommended tire pressures.

Tubeless tires are used on Victory Vision™ models. Operating the motorcycle with damaged rims creates a safety hazard including air pressure loss, steering imbalance and/or reduced steering control. Do not attempt to repair or straighten damaged rims.

Always use genuine Victory parts or equivalent so that quality is not compromised. The use of tire valves and valve cores other than original equipment replacement Victory parts could cause tire deflation which may lead to loss of control, resulting in injury or death. Do not allow any motorcycle to leave your service area without tire valve caps securely installed.

CAUTION

Work performed to the rear end of the motorcycle usually involves supporting the machine with the rear end elevated. Take precautions so that the motorcycle is securely supported when the rear tire is off the ground. This reduces the possibility of personal injury or damage to the motorcycle.

- The rear shock absorber is a sealed unit and cannot be re-built.
- Refer to Chapter 2 for maintenance of rear wheel & suspension components, and suspension ride height adjustment.
- Refer to Chapter 15 for brake system service.
- Refer to Chapter 14 for tire removal, repair, & balancing.

SPECIAL TOOLS

SPECIAL TOOLS

See page 1.21 for tool ordering information.

Wheel Bearing / Stem Bearing Race Installation Set	PV-43515
Platform Jack or Hoist	Commercially available
Blind Bearing Remover Set (for wheel bearings)	PV-43551
Lower Shock Spherical Bearing and Lower Pushrod Bushing Tool	PV-49060
Victory Air Pump & Gauge (Rear Shock Air Pressure)	2876654 or PV-48909

© 2009 Polaris Sales Inc.

SPECIFICATIONS

SPECIFICATIONS - REAR WHEEL AND SUSPENSION

SPECIFICATIONS			
Item		**Standard**	**Service Limit**
Axle Runout		-	.20 mm (.008")
Rear Shock Absorber		Single, Air Adjustable Shock (Sealed unit not serviceable)	DO NOT EXCEED 72 PSI operating pressure.
Rear Wheel Runout (Cast & Billet Type)	Axial	.80 mm (.030 inch)	2.0 mm (.080")
	Radial	.80 mm (.030 inch)	2.0 mm (.080")
Rear Wheel Size / Type		5.0 x 16″	--
Rear Wheel Travel		4.7 in. (12 cm)	--
Shock Free Length (Eye to eye center)		353 mm (13.9 inch) +/- 3mm (.120 in)	--
Suspension Ride Height Measurement		Perform Air Pressure Adjustment For Rider Weight and Load with motorcycle on side stand. (See Chapter 2)	DO NOT EXCEED 72 PSI operating pressure.
Swing Arm Pivot Shaft Runout		Not Applicable	.20 mm (.008")
Swing Arm Pivot Shaft O.D.		16.20 - 16.25 mm (.638 - .640")	16.08 mm (.633")
Wheel bearing O.D.		52 mm	--
Wheel bearing I.D.		20 mm	--
Wheel bearing spacer length		171.3 - 171.5mm (6.744 - 6.752″)	Less than 171.3 mm (6.744″)
TORQUE SPECIFICATIONS (Also see Assembly Views page 13.4 and 13.5)			
Brake Disc Screws		30.0 Nm (22 lb-ft)	Install NEW screws if loosened or removed. New screws have special pre-applied locking agent.
Hub Bolts (Billet Wheels Only)		Victory Billet Wheels: 75.0 Nm (55 lb-ft) Ness Billet Wheels: 88.0 Nm (65 lb-ft)	Clean hub threads, bolt threads, and mating surfaces of hub to remove grease, oil, and old locking agent. Apply Loctite 262 (Red) to bolt threads.
Rear Axle Nut		88.1 Nm (65 lb-ft)	--
Rear Axle Adjuster Nut		10.8 Nm (8 lb-ft)	--
Rocker Arm Pivot Shaft Retaining Bolts		24.5 Nm (18 lb-ft)	--
Sprocket Nuts (2008)		81.0 Nm (60 lb-ft)	Torque in star pattern
Sprocket Bolts (2009-2010)		95.0 Nm (70 lb-ft)	Torque in star pattern
Sprocket Studs (to wheel hub) (2008)		34.0 Nm (25 lb-ft)	--
Swing Arm Nut, Left Side		2.7 Nm (24 lb-in)	Apply Loctite 262 (Red)
Swing Arm Nut, Right Side		88.1 Nm (65 lb-ft)	--
Shock Mount Bolt (Lower)		81.4 Nm (60 lb-ft)	--
Shock Mount Bolt (Upper)		73.2 Nm (54 lb-ft)	--
Shock Pushrod Bolt (Lower)		81.4 Nm (60 lb-ft)	--
Shock Pushrod Bolt (Upper)		73.2 Nm (54 lb-ft)	--

© 2009 Polaris Sales Inc.

ASSEMBLY VIEWS & TORQUE

ASSEMBLY VIEW - REAR AXLE & ADJUSTERS

Refer to the illustration below for fastener torque

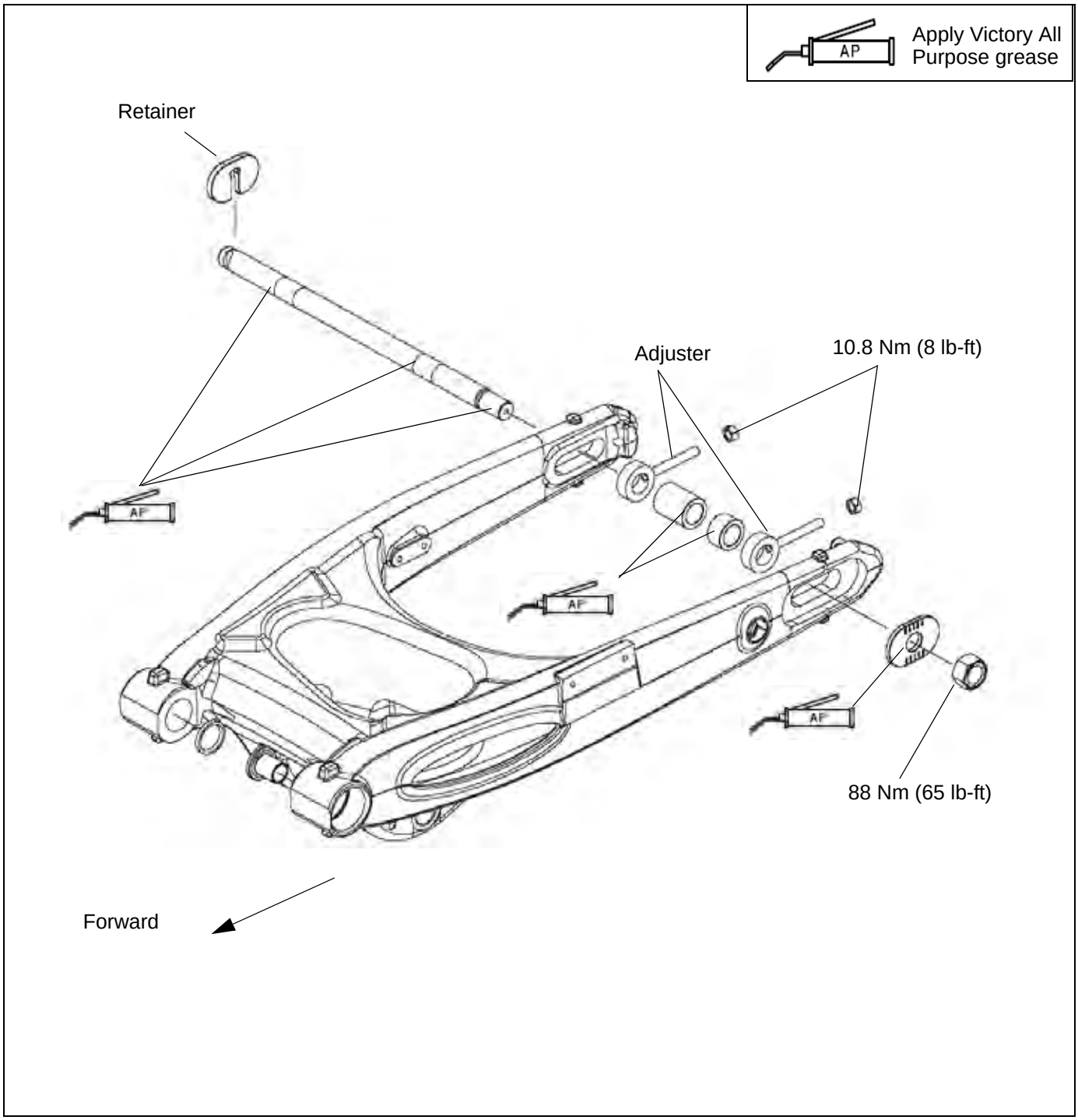

© 2009 Polaris Sales Inc.

ASSEMBLY VIEW - SWINGARM & SUSPENSION

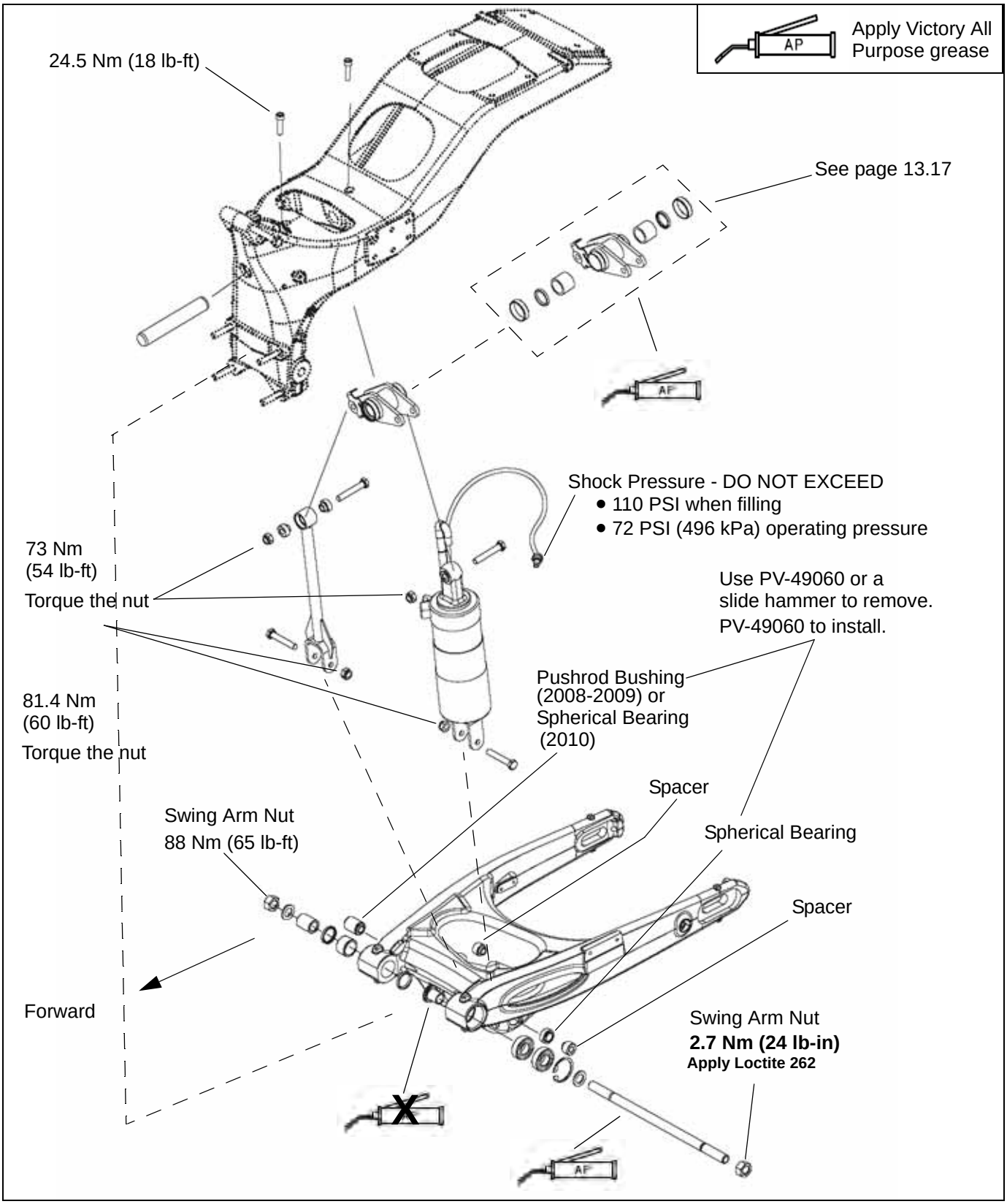

© 2009 Polaris Sales Inc.

REAR WHEEL - CAST

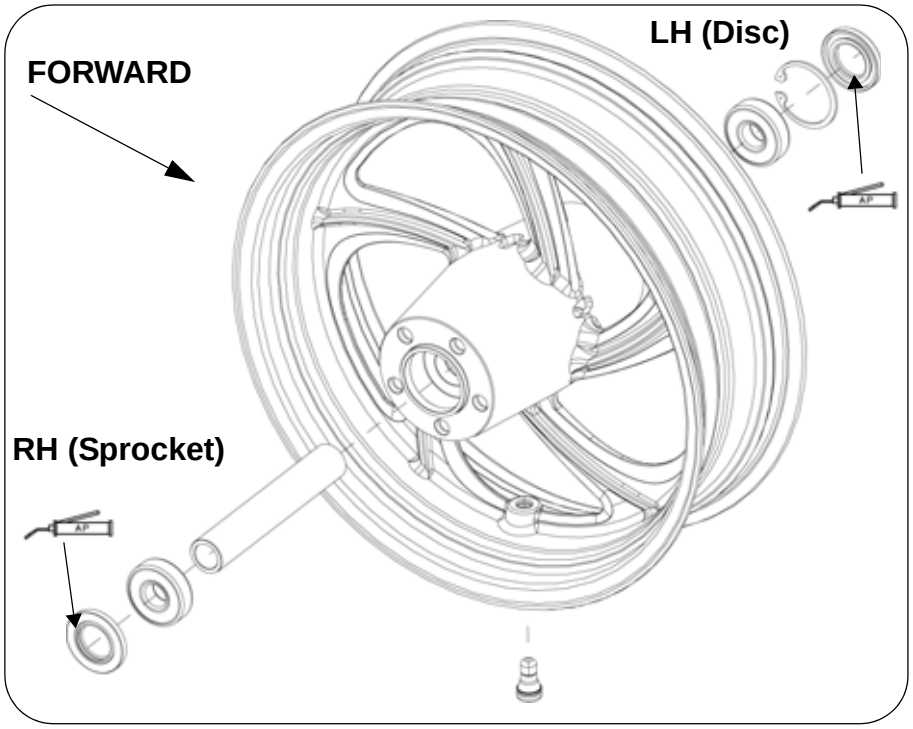

Apply Victory All Purpose Grease

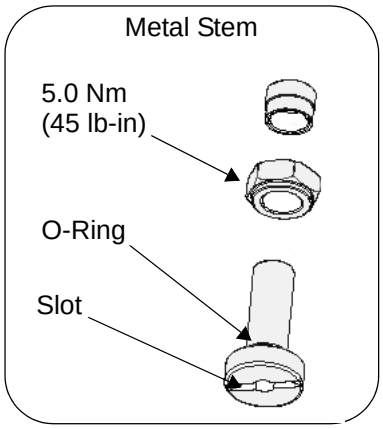

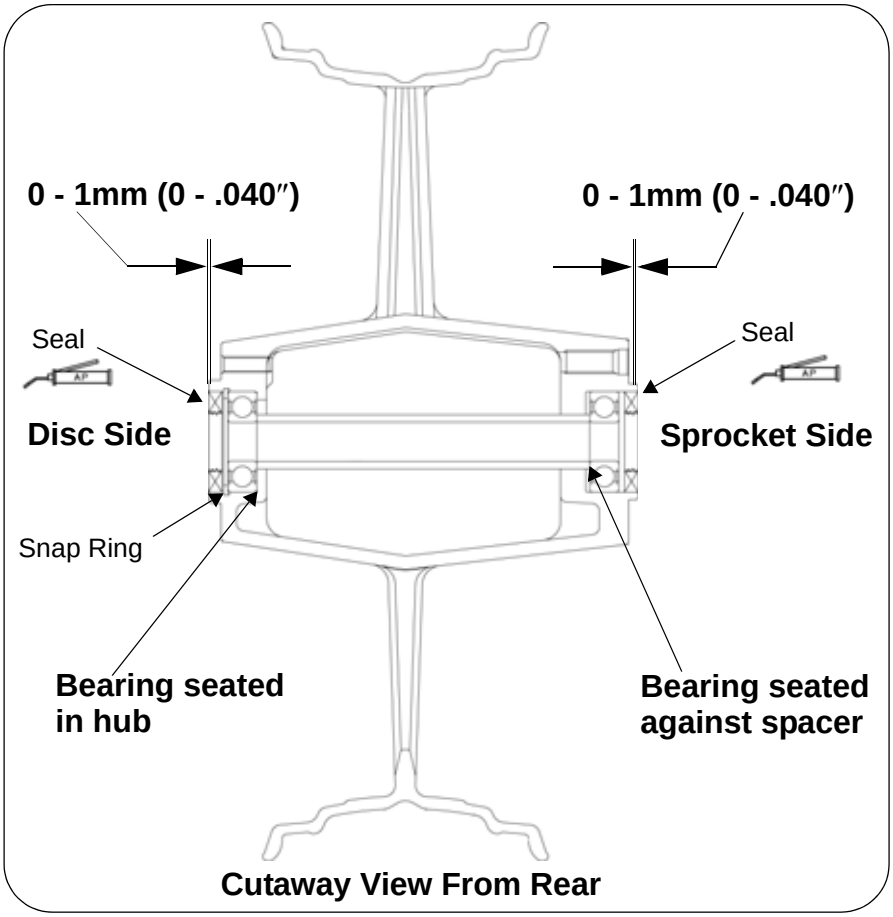

Cutaway View From Rear

© 2009 Polaris Sales Inc.

REAR WHEEL - BILLET

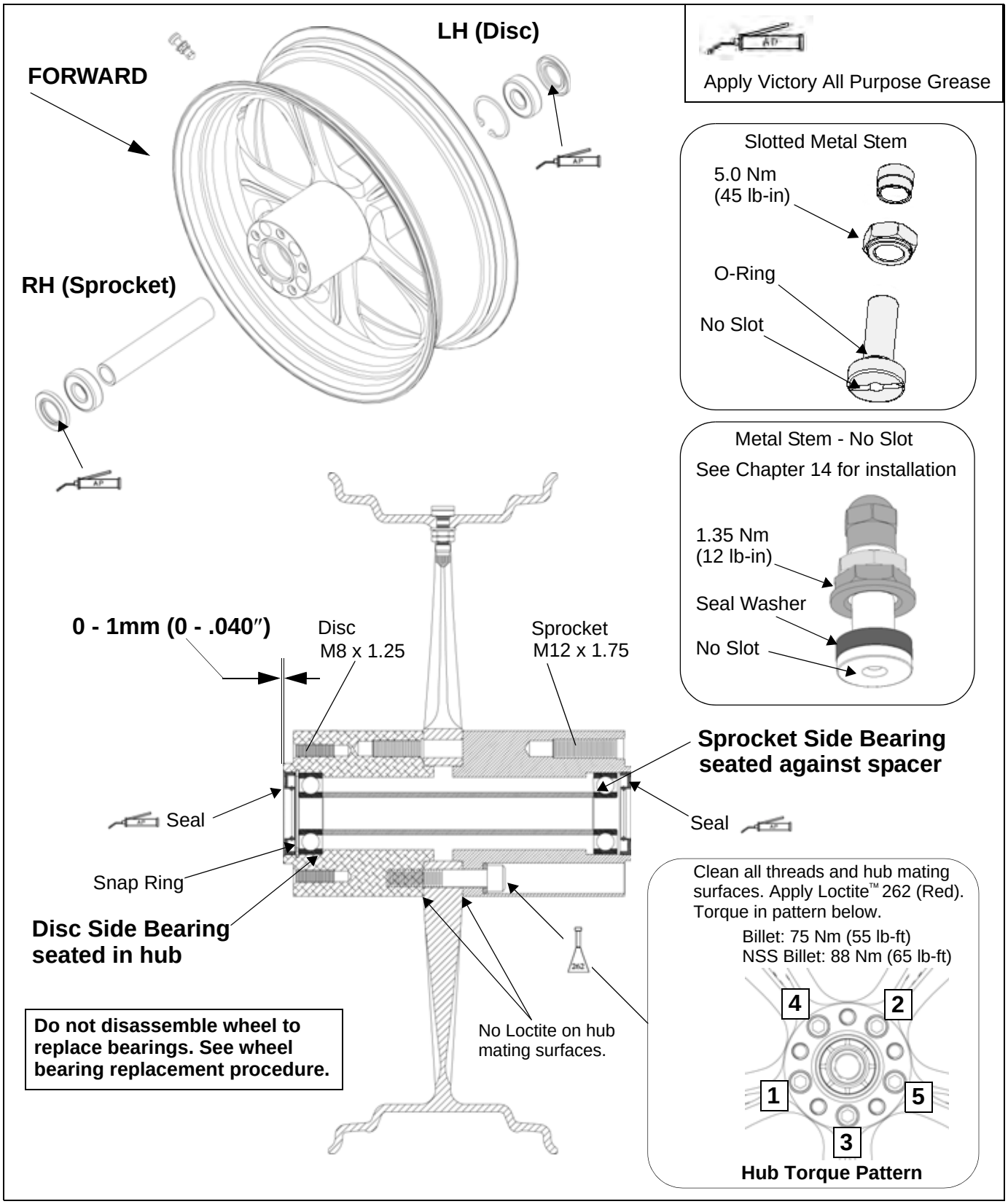

© 2009 Polaris Sales Inc.

REAR WHEEL SERVICE

REAR WHEEL REMOVAL

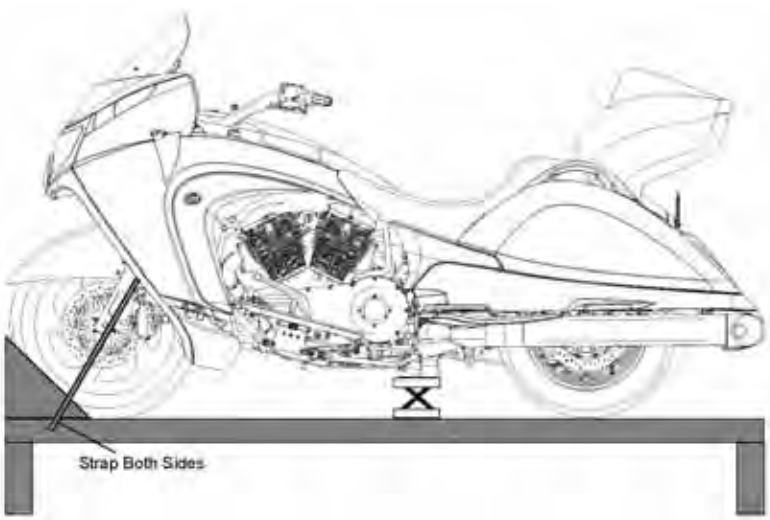

Fig.1

WARNING

Rear wheel removal involves supporting the machine with the rear end elevated. Take precautions so that the motorcycle is securely supported when the rear tire is off the ground. Severe personal injury or death can occur if the motorcycle tips or falls.

1. Secure motorcycle in a stand with straps (Fig. 1).
2. Place a platform jack (A) under the engine. Elevate the motorcycle enough to take the weight off the rear wheel, *but still leave the wheel touching the platform.*

NOTE: Muffler removal is not required.

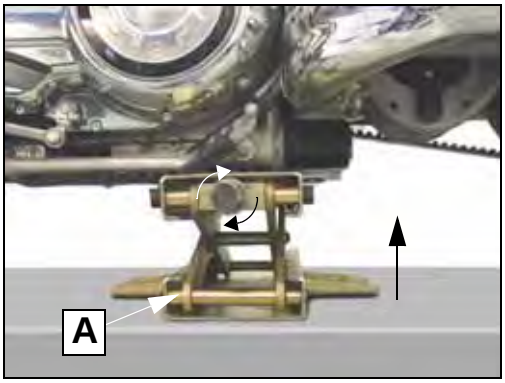

3. Remove the lower shock bolt and lower pushrod bolts (B) from the swingarm.

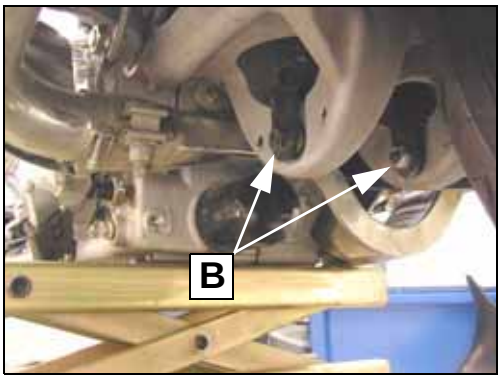

4. Raise the motorcycle high enough to gain access to the axle nut. Loosen axle nut to the end of the shaft.
5. Tap axle to the *right* until retaining plate is clear of the swingarm and remove it.
6. Tap axle from *right to left* and pull axle out the left side of the swingarm.

NOTE: Adjuster nut removal or loosening is not required, however, belt tension and alignment must be inspected after assembly.

© 2009 Polaris Sales Inc.

7. Elevate the motorcycle until the swingarm shock mount is raised a minimum of 12 inches (305 mm).

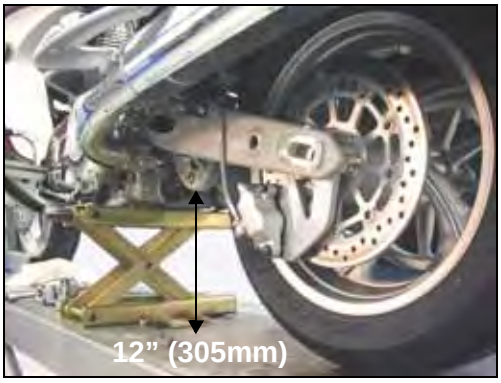

8. Remove the drive belt-side wheel spacer and disengage drive belt from rear sprocket.

NOTE: Adjuster nut removal is not required.

9. Remove rear caliper from swing arm.

> **CAUTION**
>
> Do not allow rear brake caliper brake line to hang or twist. Brake line damage may result.

10. Secure brake caliper to swing arm with tie strap.
11. Remove rear wheel from left side of the motorcycle.

NOTE: Do not apply rear brake pedal once the brake caliper has been removed.

REAR AXLE INSPECTION

1. Place rear axle in V-blocks and measure runout. Compare to service limit on page 13.3
2. Axle diameter should be measured on bearing surfaces at (D).

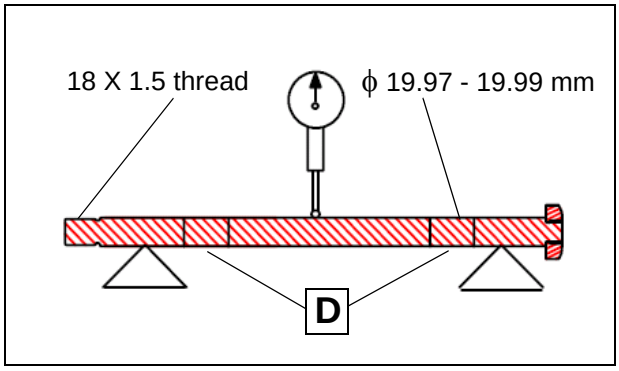

© 2009 Polaris Sales Inc.

REAR WHEEL INSPECTION

NOTE: Wheel bearings must be in good condition.

1. Set up a dial indicator to measure axial and radial runout of the wheel. Refer to Chapter 14 for procedure. Compare measurements to service limits.
2. Visually inspect wheel for cracks or other damage.
3. Replace wheel if it fails visual or measured inspection.

REAR WHEEL BEARING INSPECTION

NOTE: If possible, also inspect wheel bearings before removing the wheel from the vehicle (Chapter 2). Do not remove bearings from wheel to inspect. Bearings cannot be reinstalled. Replace both bearings if one or both fail inspection, or if either bearing was removed.

1. Visually inspect integral bearing seal for damage.
2. Inspect bearing fit in wheel hub. Outer race of bearing must fit tightly in bore.
3. Slide axle into wheel. Check for smooth rotation and tight fit.

NOTE: Due to extremely close tolerances, the bearings must be inspected visually, and by feel. Look for signs of discoloration, scoring, galling, or contamination from moisture or dirt. Replace bearings if any of the above are present. Turn the inner race of the bearings. The bearings should turn smoothly and quietly. The inner race should be firm with minimal side to side movement and no detectable up and down movement.

WHEEL BEARING REMOVAL (Typical)

⚠ CAUTION

Do not reuse bearings that have been removed.

NOTE: These instructions depict typical procedures to use the wheel bearing removal and installation tools. Also refer to instructions included with tool.

1. Remove brake disc (page 13.14).

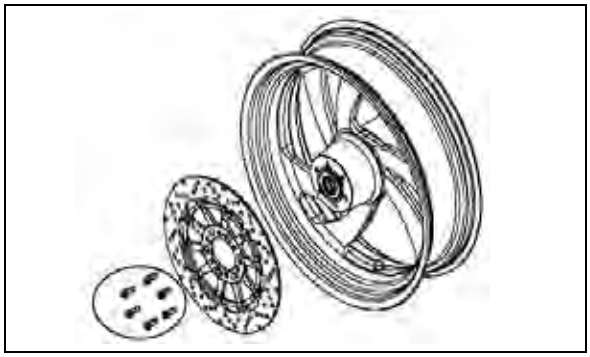

2. Remove sprocket.

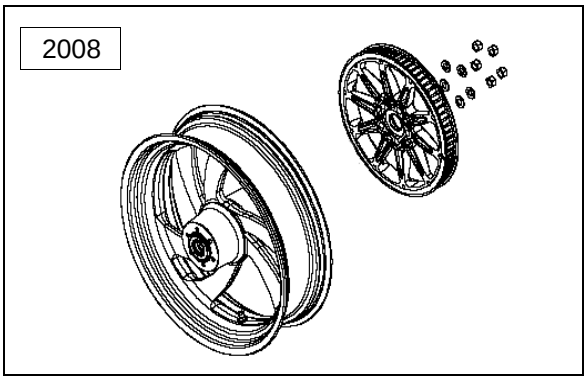

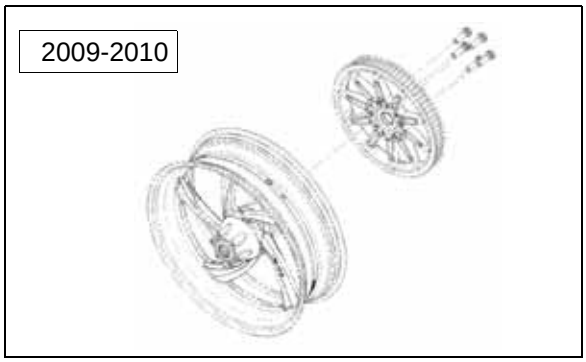

© 2009 Polaris Sales Inc.

WHEEL BEARING REMOVAL - TYPICAL (Cont.)

3. Protect hub. Pry seals out of hub on both sides.

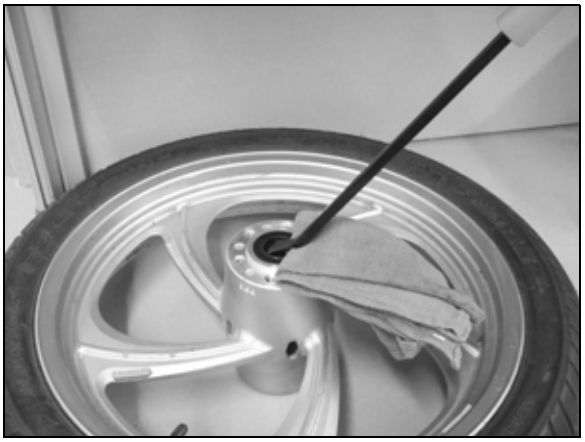

4. Remove snap ring from disc side.

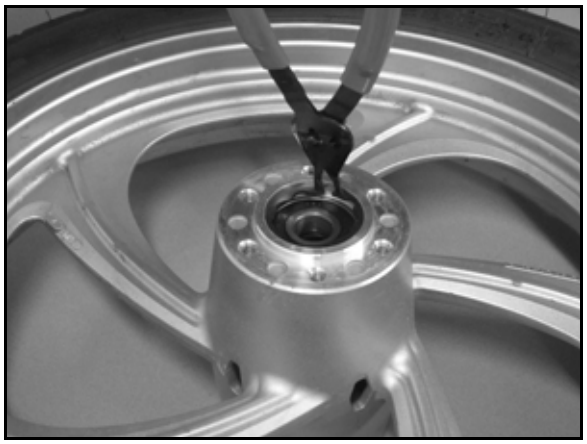

5. Install bearing remover element into bearing. Tighten bearing remover until firm. Do not over-tighten or tool may be damaged.

6. Remove bearing by tightening lower nut.

7. Remove spacer.

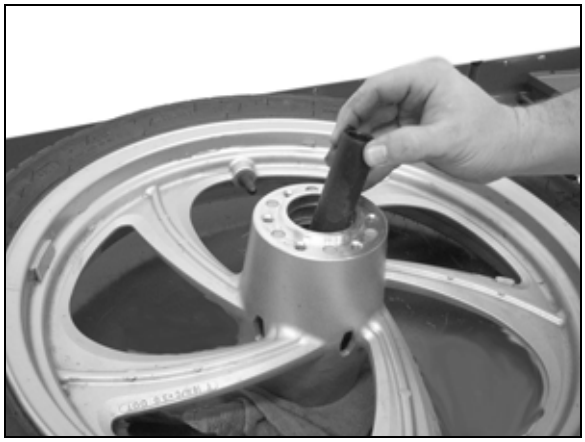

8. Extract or drive bearing from the other side.

© 2009 Polaris Sales Inc.

WHEEL BEARING INSTALLATION (TYPICAL)

1. Clean inside of wheel hub and bearing spacer. Replace spacer if worn beyond the service limit.

Standard: 171.30 - 171.50 mm (6.744 - 6.752″)
Service Limit: Less than 171.30mm (6.744″)

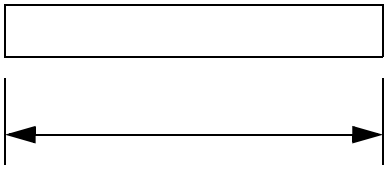

2008 - 2010 Cast and Billet

Wheel Bearing Installation Set PV-43515

2. Slide threaded rod from PV-43515 through wheel hub. Place new wheel bearing (A) into left (disc) side of wheel with markings facing out (toward outside of hub).

3. Assemble tool with flat side of 51mm wheel bearing collar (B) against wheel bearing. This tool must be slightly smaller than O.D. of bearing and must be flat to support both inner and outer race equally. DO NOT pull or press on inner race of ball bearings or bearing will be permanently damaged!

4. Install tool bearing (C), washer (D), and nut (E) on threaded shaft.

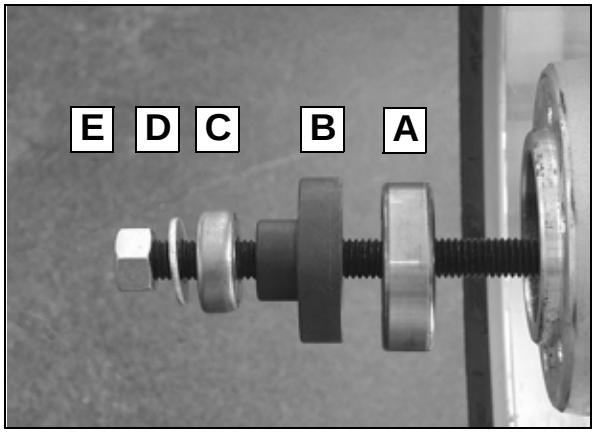

5. Install the other 51mm bearing tool (F) in bearing bore on right side of hub with flat washer and nut. Pull left bearing into hub by tightening nut on left side of tool until left bearing is fully seated in hub.

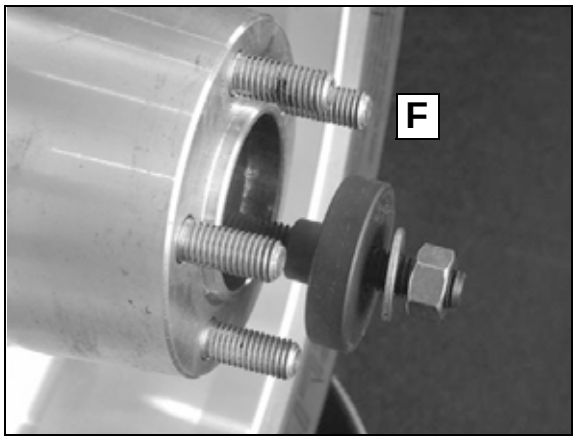

NOTE: DO NOT install retaining ring at this time.

6. Turn wheel over and install bearing spacer (G). Be sure spacer is centered on bearing.

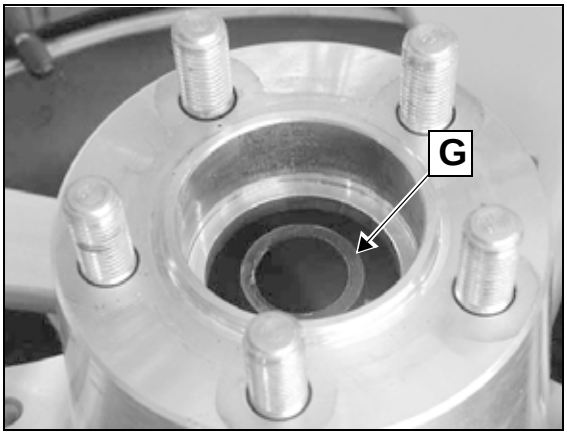

© 2009 Polaris Sales Inc.

7. Assemble tool through left side with backing disc (or bearing tool) flat against left bearing. Be sure the tool supports both inner and outer race.

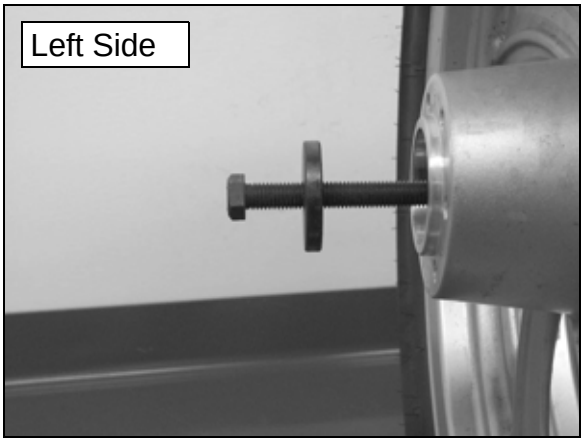

8. Place new wheel bearing (H) on threaded shaft (markings out) and start it squarely in the hub.
9. Install 51 mm wheel bearing installation tool with flat side against bearing, followed by tool bearing, flat washer, and nut.

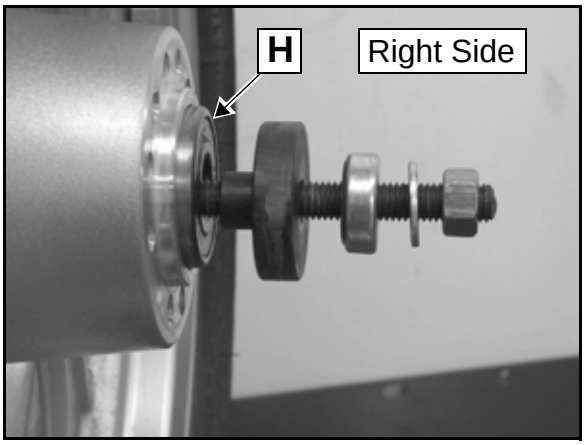

10. Keep the wheel positioned as shown to keep spacer centered during installation of right bearing.

11. Pull bearing in to right side of wheel until seated against spacer.
12. Remove tool and check to be sure that spacer is centered and trapped firmly between bearing inner races. **If not centered or not trapped, center it using the rear wheel axle and repeat Steps 9 - 11 to fully seat bearing against spacer**.
13. Install snap ring. Be sure it is fully seated in groove.

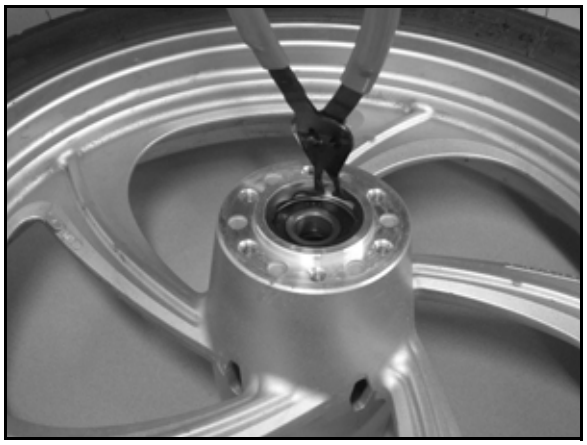

14. Rotate inner races of bearings to check for free, smooth rotation.
15. Install new seals using a 52 mm seal driver.

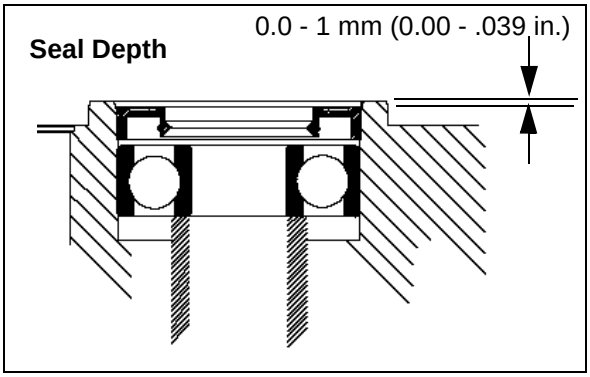

16. Install brake disc (page 13.14). Clean discs with Victory Disc Brake Cleaner.

CAUTION

Do not allow brake cleaner to contact painted surfaces.

WARNING

Grease or oil on the brake disc or pads will increase stopping distance which could cause a loss of control or a crash.

17. Install rear sprocket (page 13.14).

© 2009 Polaris Sales Inc.

BRAKE DISC REMOVAL

1. Remove rear wheel (page 13.8).
2. Position wheel with brake disc facing up. Support wheel so as not to damage the belt sprocket.

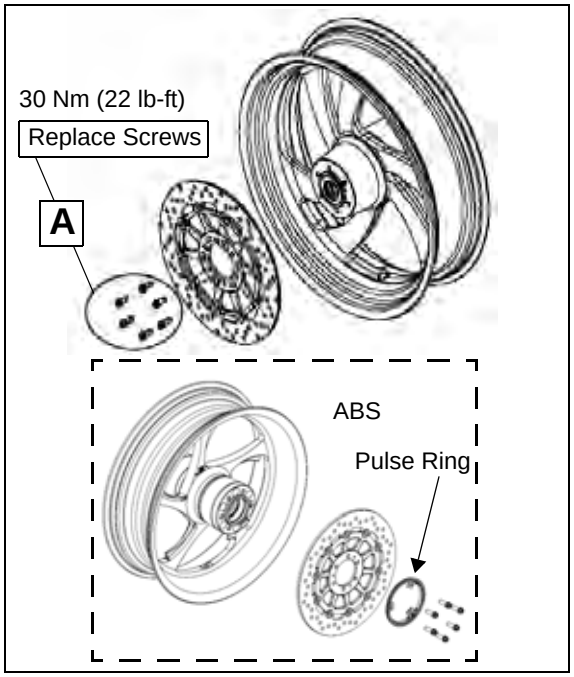

3. Remove and discard brake disc screws (A).
4. Remove brake disc from wheel.

BRAKE DISC INSTALLATION

1. Clean bolt hole threads with Loctite Primer N.
2. Clean mating surfaces of disc and hub.
3. Install brake disc on hub with part number to outside.
4. ABS Models: Place pulse ring on disc and align holes with disc and hub.
5. Install new brake disc screws and torque to specification. Do not re-use brake disc screws. New screws have a special pre-applied locking agent.
6. Install rear wheel (page 13.15).

REAR SPROCKET REMOVAL

1. Securely support rear of motorcycle off floor.
2. Remove rear wheel (page 13.8).
3. Remove sprocket nuts and washers (2008) or sprocket bolts (2009-2010).
4. Remove rear sprocket from wheel.

REAR SPROCKET INSTALLATION

1. Clean sprocket stud threads (2008) or bolt threads in hub (2009-2010) to remove all grease or oil residue.
2. Clean mating surfaces of wheel and sprocket.
3. **2008 Models**: Be sure studs are tight and properly torqued to hub. Install sprocket over studs, then install washers and nuts with tapered side facing OUT.
4. Tighten nuts in a star pattern to specified torque.

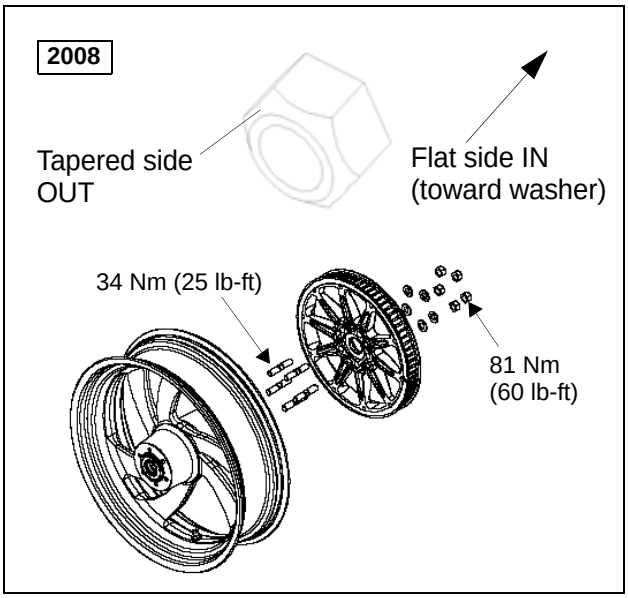

5. **2009-2010 Models**: Install sprocket and new sprocket bolts.
6. Torque bolts in a star pattern to specified torque.
7. Install rear wheel (page 13.15).

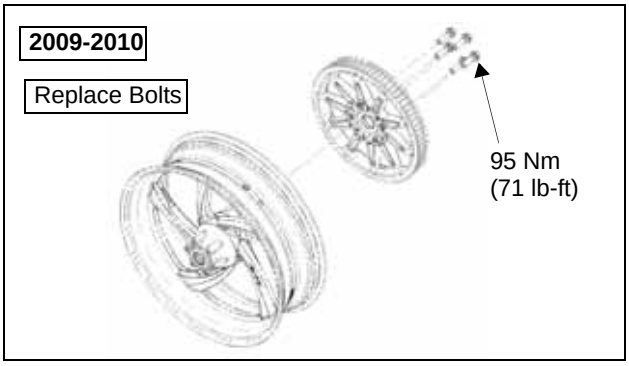

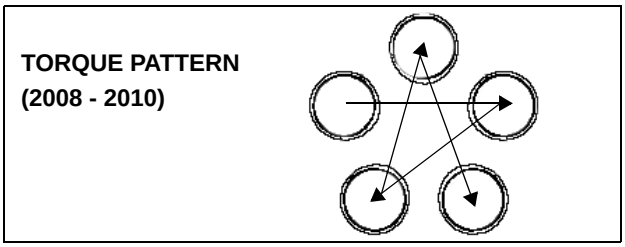

© 2009 Polaris Sales Inc.

REAR WHEEL INSTALLATION

1. Place rear wheel into position underneath the wheel well.

2. Install the rear wheel spacers in their correct locations. Long spacer on sprocket side and short spacer on disc side of wheel.

3. Verify that the rear sprocket is aligned into the belt guard and install the drive belt. Verify the teeth are engaged completely on both the front and rear sprockets.

4. Prepare the caliper for installation by slightly spreading the brake pads. Place the caliper into position on the brake disc. Verify caliper bracket tab (A) inserts into the slot on the left inside of swingarm once you start to lower it into position.

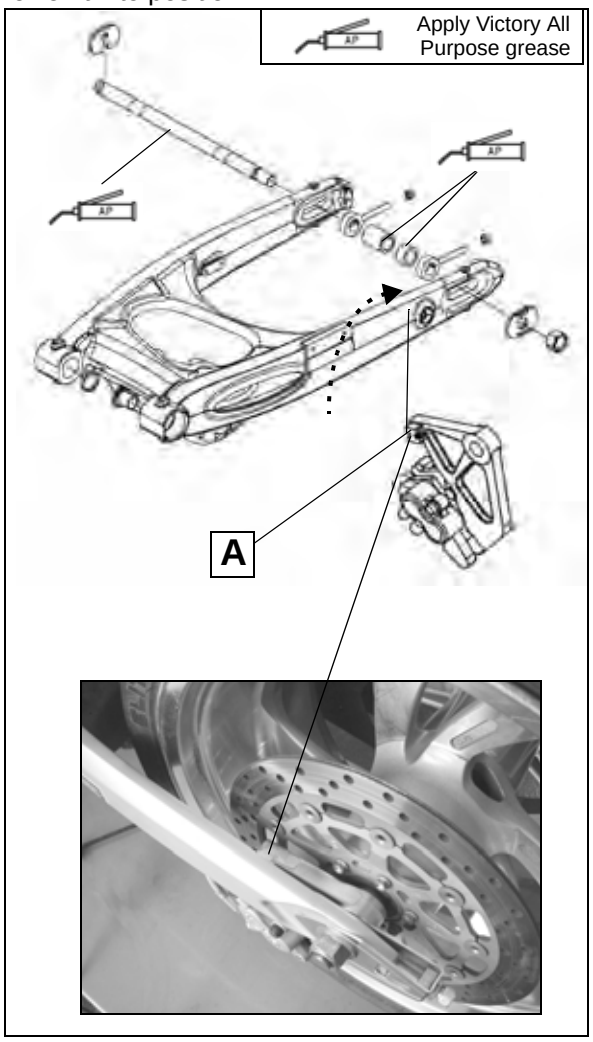

5. Using the platform jack, lower the swingarm over the wheel assembly while guiding the brake caliper, belt adjusters into alignment.

6. Apply a thin film of grease to axle surface.

7. Insert axle through left side swingarm and axle adjuster, through caliper bracket, left spacer, and into wheel. Push axle in through entire wheel assembly, right wheel spacer and right axle adjuster and right side of swingarm until retaining plate can be installed in slot of axle (wheel alignment marks on plate facing OUT).

8. Tap or pull axle back toward left side until plate is engaged in swingarm. Install washer and axle nut on left side of axle (if removed).

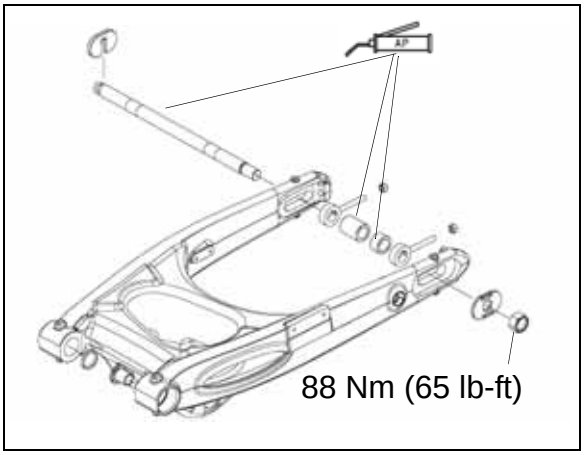

9. Verify the tab of caliper bracket is still engaged in slot on left side of swingarm.

© 2009 Polaris Sales Inc.

10. Tighten axle nut until seated and back off one full turn. Tap axle forward on each side to be sure adjuster nuts are seated against swingarm.

11. Torque rear axle nut to 88 Nm (65 lb-ft).

12. Inspect lower shock mount spherical bearing and spacers. Inspect lower pushrod bushing. Replace worn parts using bushing / bearing tool PV-49060.

13. Lower the motorcycle with the platform jack until the shock eyelet (arrow) is aligned with the spherical bearing in the swingarm. Install spacers on each side of spherical bearing. Align parts and install bolt with nut on the inside. Torque nut to 81.4 Nm (60 lb-ft).

14. Continue to lower the motorcycle with the platform jack until the lower shock pushrod eyelet is aligned with the swingarm. Install bolt with nut on the inside. Torque the nut to 81.4 Nm (60 lb-ft).

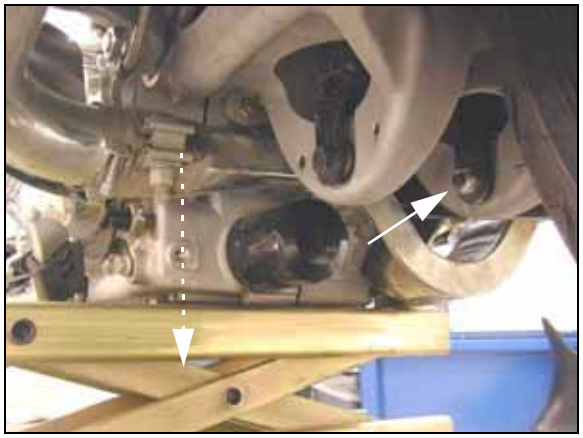

15. Adjust belt tension and wheel alignment (Chapter 2).

16. Apply rear brake pedal 2-3 times to re-set brake pads. firmly against the disc. You should feel firm resistance when applying pressure to the brake pedal. If pedal feels spongy, verify proper assembly of rear wheel and caliper bracket. I correctly assembled, bleed brake system as described in Chapter 15.

17. Rotate the rear wheel and check for smooth rotation without brake drag. If drag is evident, verify brake pedal clearance is within specified 1-2mm range. (Ch. 15)

18. Lower the motorcycle and test drive to ensure proper operation.

© 2009 Polaris Sales Inc.

REAR SHOCK

REAR SHOCK SERVICE DATA

The rear shock is not serviceable. Use dry compressed air or Victory Air Pump and Gauge (2876654 or PV-48909) to pressurize the shock. Set ride height by performing air pressure adjustment (see Chapter 2).
Do not store the shock horizontally. If left horizontal for a period of time, cycle shock at least 10 times in upright position before installation

DO NOT EXCEED 72 PSI operating pressure.

DO NOT EXCEED 110 PSI when filling.

AIR SUSPENSION ADJUSTMENT			
Set desired pressure with bike unloaded on side stand			7176130
Total Cargo & Occupant weight (lbs)	Air Pressure (psi)		
	No Trunk	Trunk	Low
100	0	0	22
125	0	6	25
150	0	10	28
175	4	13	31
200	10	19	33
225	14	23	36
250	19	28	39
275	24	33	42
300	30	39	46
325	35	44	50
350	40	49	55
375	46	55	60
400	51	60	66
425	57	66	72
450	62	71	

2010 Vision 8-Ball and 2010 Ness Signature Series Model

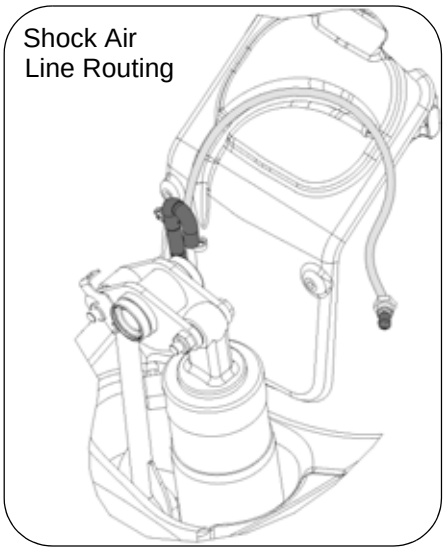

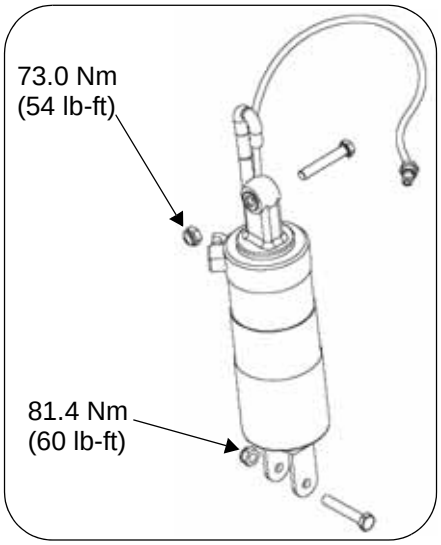

Suspension Rocker: 2008-2010 Vision (except 2010 8-Ball & Ness)

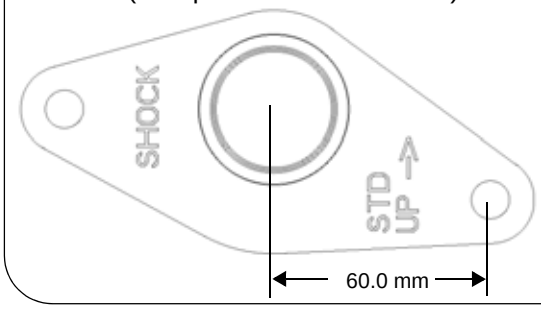

Suspension Rocker: 2010 Vision 8-Ball / Ness

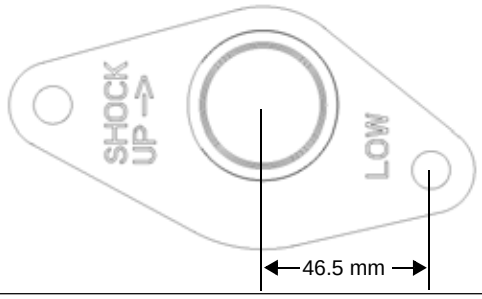

© 2009 Polaris Sales Inc.

REAR SHOCK REMOVAL

WARNING

Shock absorber removal involves supporting the machine with the rear end elevated. Take precautions so that the motorcycle is securely supported when the rear tire is off the ground. Severe personal injury or death can occur if the motorcycle tips or falls.

1. Remove seat (Chapter 3).
2. Open left saddlebag and remove air pressure fitting (A) from inner bag compartment.

3. Remove side covers (Chapter 3).
4. Place a wide-based platform jack under rear of engine.
5. Elevate the jack slightly until weight is removed from shock and pushrod mounting bolts.
6. Loosen lower shock mounting bolt and pushrod bolt, and remove the fasteners (B).

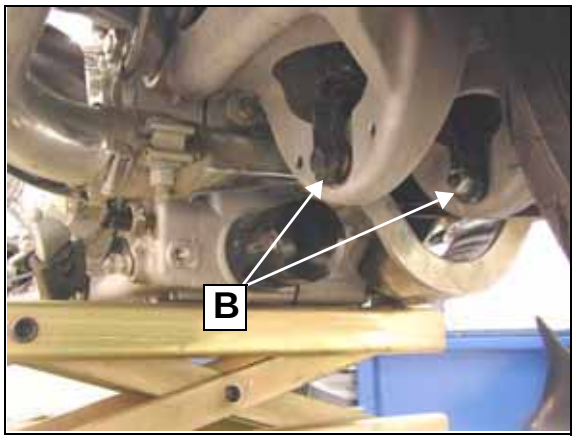

7. Remove rear wheel (page 13.8).
8. Remove both pivot pin retaining fasteners.

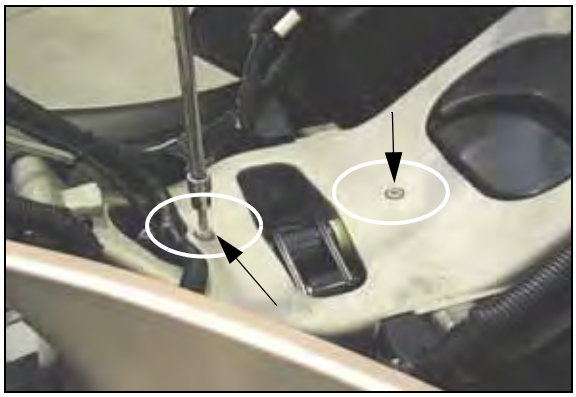

9. Drive pivot pin (C) from the backside forward, until clear of the suspension rocker arm. Leave driver in place.

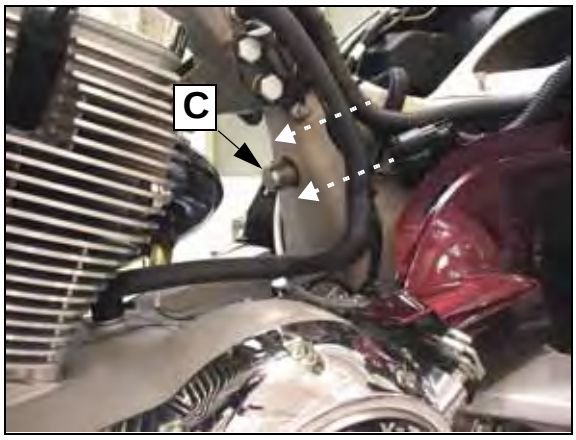

10. Remove driver while guiding bottom shock mount into opening in swingarm with pushrod along side.

11. Remove shock, rocker arm, and pushrod as an assembly when clear of the frame.

© 2009 Polaris Sales Inc.

REAR SHOCK AND PIVOT INSPECTION

WARNING

The rear shock absorber is air pressurized and is not rebuildable. **DO NOT** attempt to disassemble or service the shock.

1. Inspect shock for signs of oil seepage around the shock body. If leakage is suspected replace the shock absorber assembly.
2. Inspect eyelets (A) for cracks or damage. Replace shock if either eyelet is cracked.

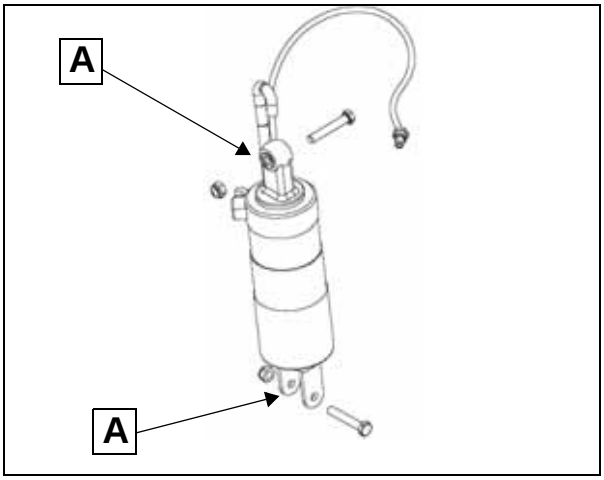

3. Clean shock thoroughly.
4. Inspect for corrosion, pitting, or damage. Replace shock if any of the above is evident.
5. Depressurize the shock.
6. With shock upright, cycle through entire travel range. Shock should move smoothly with consistent damping through the entire travel range, and return to the fully extended position when released. Replace shock assembly if damping is inconsistent, oil leakage has occurred, or if the damper rod does not fully extend when released.
7. Inspect shock spring for cracks or coil distortion. Measure free length and compare to specification.
8. Inspect the pivot mechanism and pivot pin. Bearing needles should turn freely and be free of corrosion or contamination. Thrust bearings should be free of cracks or wear. Inspect surface of pivot pin for roughness, galling or uneven surface. Replace rocker arm and pin as an assembly if either is worn or rough.

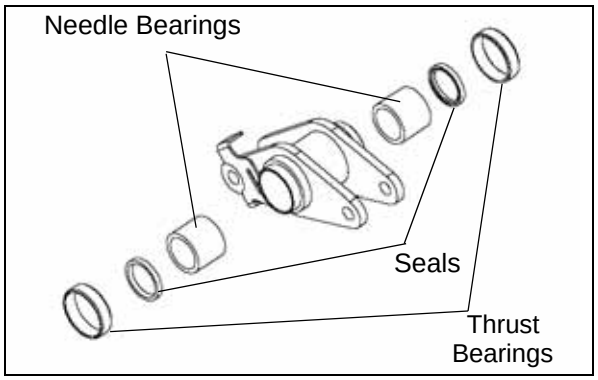

9. Assemble shock, rocker arm, and pushrod assembly. Torque upper fasteners to 73 Nm (54 lb-ft). Torque lower fasteners to 81.4 Nm (60 lb-ft). See page 13.5.

= T
Shock & Pushrod To Rocker Arm: **73 Nm (54 lb-ft)**

10. Inspect lower pushrod bushing (B) (this is a spherical bearing with spacers on 2010 models).
11. Inspect lower shock mount spherical bearing (C) and spacers (D) for wear. Replace any worn parts before installing the shock and pushrod. Use special tool PV-49060 to remove and install bushings or bearing. Follow instructions provided with tool. Replacement can be performed with swingarm installed.

NOTE: A slide hammer puller can be used to remove spherical bearings. Installation requires PV-49060.

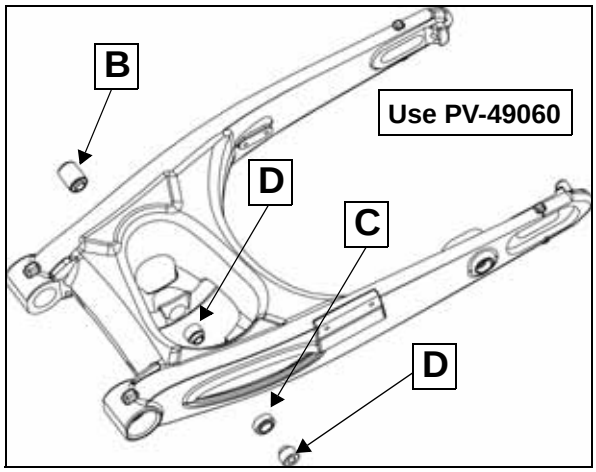

© 2009 Polaris Sales Inc.

SHOCK ABSORBER INSTALLATION

1. Grease all pivot points before assembly.
2. Lubricate and install pivot pin through front side of frame.

3. Drop the shock assembly down through opening in swingarm with pressure hose routed between pushrod and vent hose. Raise shock into position.

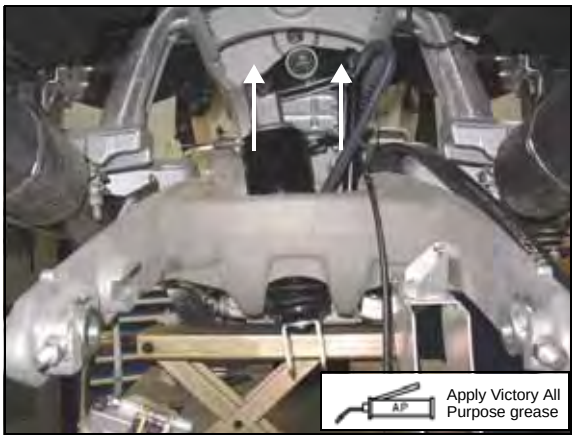

4. Align the rocker arm bore with frame hole, and tap pivot pin through rocker and into rear portion of frame.
5. Install pin retaining bolts. Torque to 24.5 Nm (18 lb-ft).

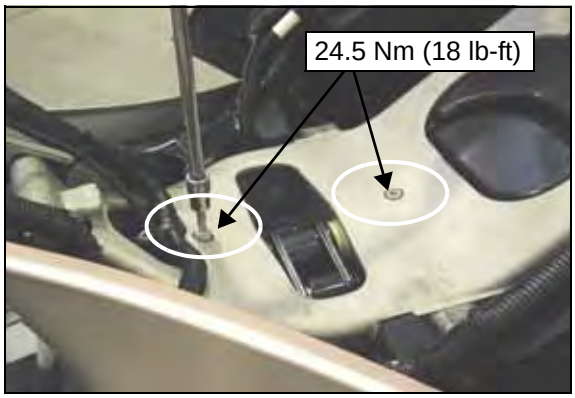

6. Raise or lower swingarm as needed to align shock and pushrod lower mounts on swingarm.
7. Install lower shock bolt from left to right. Install nut.
8. Install lower pushrod bolt from right to left. Install nut.
9. Torque (A) (nut side) to specification.

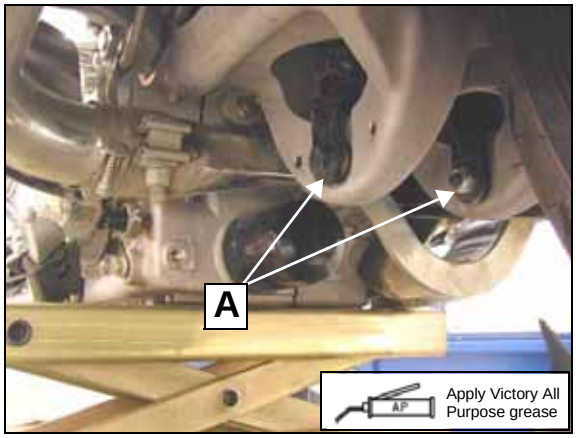

= T
Shock Eyelet Fastener Torque: **81.4 Nm (60 lb-ft)**

10. Install air line (C) securing it to channel in debris flap.
11. Route air line fitting through channel in debris flap to opening in left inner saddlebag. Tighten nut securely.

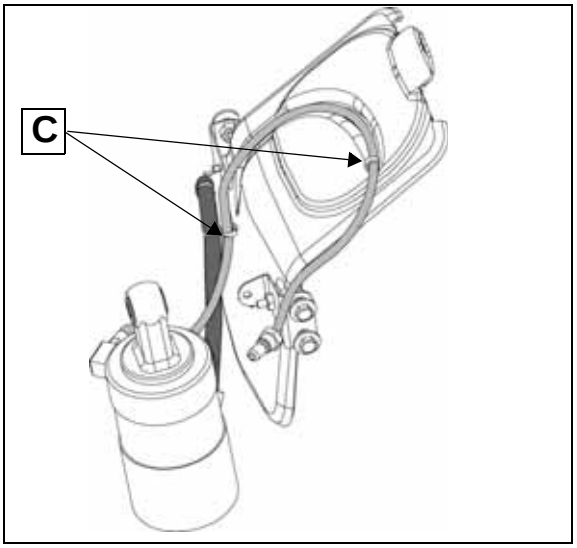

12. Install rear wheel (page 13.15).
13. Install side covers (Chapter 3).
14. Install seat (Chapter 3).

© 2009 Polaris Sales Inc.

SWINGARM SERVICE

SWING ARM REMOVAL

1. Remove rear wheel assembly (page 13.8).
2. Remove the lower shock mounts.
3. Remove brake line guide from left-hand side of swingarm (A).
4. Remove swingarm pivot nut (C) and shaft (D). Collect the washer (E).
5. Remove swingarm.

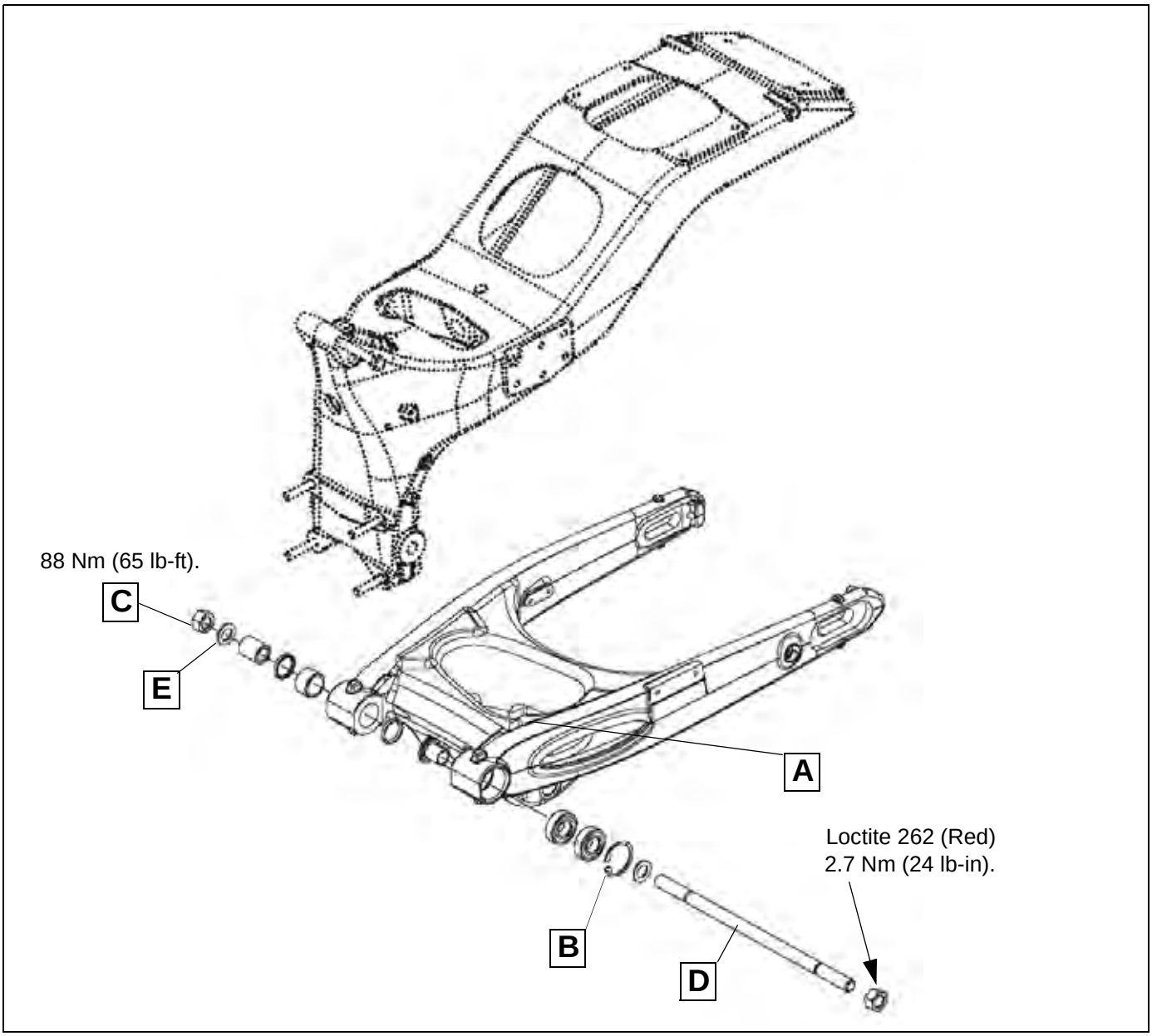

© 2009 Polaris Sales Inc.

SWING ARM BUSHINGS / BEARING REPLACEMENT

1. Remove sleeve (A) from right side of swingarm.

2. Remove seals (B) and bearing (C) from right side of swingarm.

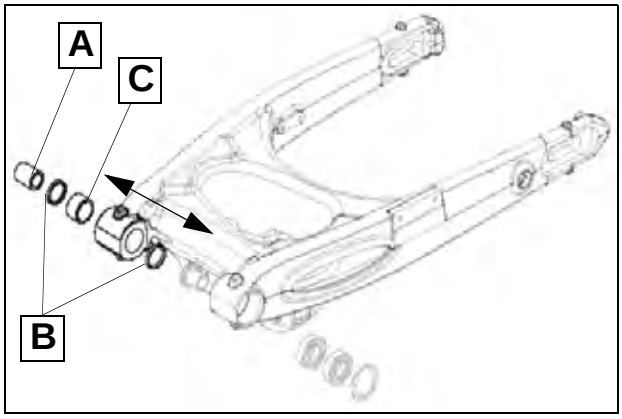

3. Remove bushing (D) from left side of swingarm.

> **CAUTION**
>
> Do not reuse bearings that have been removed.

4. Remove snap ring (E) and drive bearings (F) out from inside to outside.

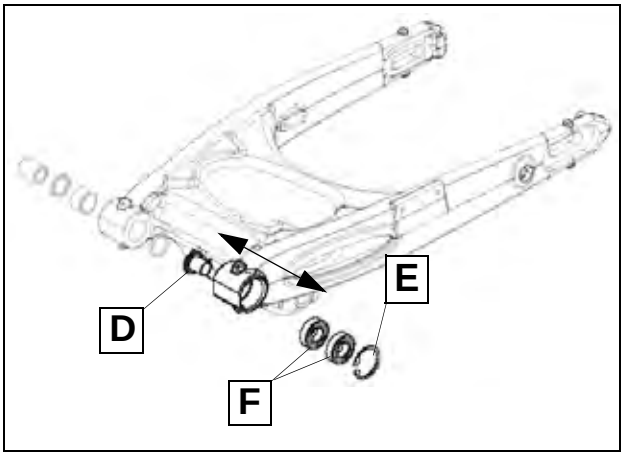

5. Support the inside left edge of the swingarm pivot on a pressing surface.

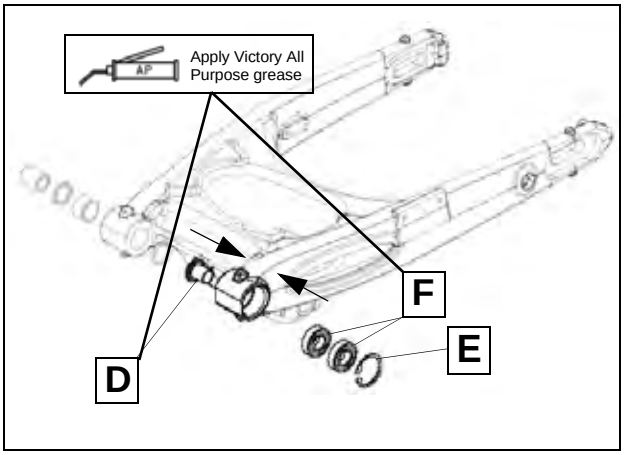

6. Grease outside surface of new bearings (F) and press into bore until seated, using a 41.5mm drive adaptor or a suitable arbor. Press on the OUTER RACE only.

7. Install snap ring (E) and be sure it is seated properly in groove.

8. Install bushing (D) into left side of swingarm. Left side bearings are pre-lubricated. Do not apply grease to this bushing.

9. Support inside right edge of swingarm.

10. Grease surface of a new bearing (C) and press into bore until centered. Use a 31.5mm drive adaptor or a suitable arbor.

11. Apply grease to inner lip of seals (B) and install seals flush with outside of swingarm.

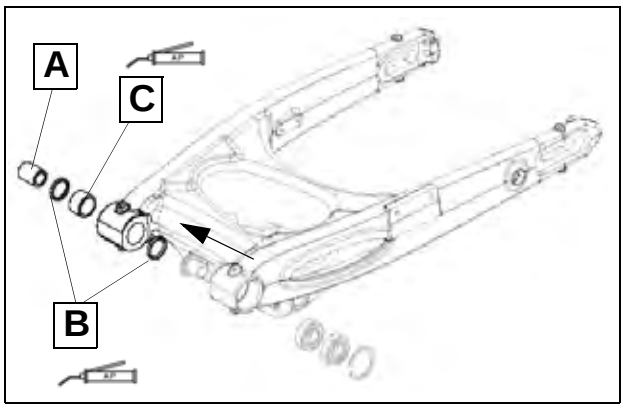

12. Grease right side bearing sleeve (A) and install with a twisting motion until centered in the seals and bearing.

© 2009 Polaris Sales Inc.

SWING ARM INSTALLATION

1. Clean inside of pivot shaft bore in frame (A).

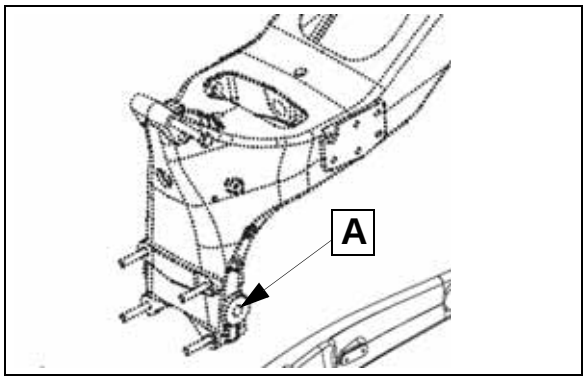

2. Grease swingarm pivot shaft (B).
3. Apply Loctite 262 (Red) to threads on left end of shaft and install left side nut (C) until outer surface is even with end of shaft.
4. Install washer (D) onto shaft.
5. Place swingarm assembly with bearings, seals, and bushings installed into position on frame.
6. Install pivot shaft from left to right. Be sure right-hand sleeve (E) is in place and does not get pushed out of swingarm when shaft is installed.
7. Install right side washer (F) and nut (G) hand tight.
8. Torque LEFT side nut to 2.7 Nm (24 lb-in).
9. Tighten RIGHT side nut to 88 Nm (65 lb-ft).

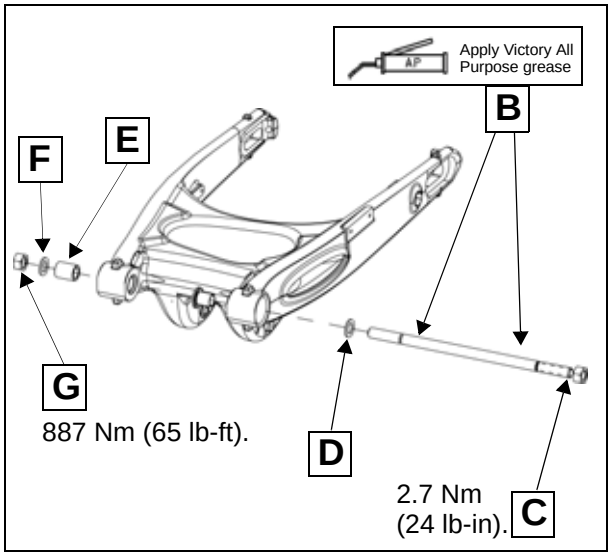

10. Move swingarm through travel range to be sure it pivots smoothly and freely.
11. Replace rear brake line clamp to left side of swingarm and torque screw to 8 ft. lbs. (10.8 Nm).
12. Install shock and pushrod to swingarm. Install bolts from outside to inside and install nuts. Torque nut side of fastener to 73 Nm (54 lb-ft).).
13. Install rear wheel assembly (page 13.15).
14. Raise rear of motorcycle again and check to make sure that the following applies:
    - The rear wheel turns freely, without any interference between the belt guard, the tire, and the swingarm.
    - Brake line is properly routed and secured.
    - The left and right axle adjusters are aligned properly (wheel is in alignment).
    - The rear brake functions properly. It is critical that the peg on the caliper mount rides inside the channel in the swingarm. If brake pedal does not feel firm refer to Chapter 15 for brake inspection and bleeding procedure.
    - All fasteners have been tightened correctly.
    - There is adequate clearance between swingarm and exhaust mufflers and mounting.
    - The swingarm is not loose, it doesn't wobble from side to side, and it doesn't move up and down when pushed and pulled firmly.
15. Test ride motorcycle to be sure rear suspension operates smoothly without binding or abnormal noises.
16. Adjust air pressure for rider weight and load (see Chapter 2). DO NOT EXCEED 72 PSI operating pressure.

© 2009 Polaris Sales Inc.

TROUBLESHOOTING

TROUBLESHOOTING

PROBLEM	POSSIBLE CAUSE	REPAIR RECOMMENDED
Rear Wheel Feels “Loose” or Wobbles	Low tire pressure	Inflate to specification
	Worn or damaged wheel bearings	Replace wheel bearings
	Worn or damaged swing arm, rocker, pushrod, or shock bushings/bearings.	Replace bushings or bearings
	Damaged or incorrect rear tire	Replace rear tire
	Unbalanced rear wheel assembly	Balance tire/wheel
	Distorted (bent) rear wheel	Replace wheel
	Loose swing arm, axle or suspension fasteners.	Torque to specifications
Rear Suspension Too Hard	Bent / corroded shock damper rod	Replace shock
	Dry, seized, damaged, corroded suspension bushing(s) / bearing(s)	Correct as necessary
	Incorrect preload adjustment	Adjust to rider & load
	Damaged, dry, or corroded swingarm, rocker, pushrod, or shock bushings, bearings, or shaft	Lubricate or Replace
	High tire pressure	Deflate to specification
	Drive belt adjustment too tight	Adjust drive belt tension
Rear Suspension Too Soft	Shock leaking air / oil	Replace shock / repair line leak
	Weak shock spring	Replace shock spring
	Incorrect air pressure adjustment	Adjust to rider & load
	Excessive load placed on motorcycle	Educate rider / operator
	Low tire pressure	Inflate to specification
Rear Suspension Noisy	Loose fasteners	Torque to specifications
	Worn wheel bearings	Replace
	Worn swing arm, rocker arm, pushrod, or strut bushing / bearings	Replace
	Damaged shock absorber	Replace as necessary
	Contact between moving and stationary parts	Check all swingarm, wheel, and brake system components for contact with frame, exhaust, body, etc. Check routing and the all fasteners are in place and tight
Rear Wheel Drag (Turns Hard)	Incorrect drive belt adjustment	Adjust drive belt tension
	Tire contact with object or chassis	Determine point of contact and correct
	Bent rear axle	Replace
	Damaged wheel bearings	Replace
	Brake problem	Refer to chapter 15

© 2009 Polaris Sales Inc.

CHAPTER 14
TIRES / WHEELS

GENERAL / SAFETY 14.2
WARNINGS / PRECAUTIONS 14.2
TIRE DATA 14.3
TIRE PRESSURE / LOADING 14.3
WHEEL DATA 14.3
WHEEL SPECIFICATIONS 14.3
SPECIAL TOOLS 14.3
SPECIAL TOOLS 14.3
TIRE INSPECTION 14.4
TIRE WEAR PATTERNS & GENERAL CAUSES 14.4
OZONE CRACKING 14.4
FRONT TIRE CUPPING 14.4
TIRE CHANGING 14.5
GENERAL 14.5
TIRE REMOVAL 14.6
TIRE REMOVAL (TYPICAL) 14.6
WHEEL INSPECTION 14.7
VISUAL INSPECTION & RUNOUT 14.7
TIRE REPAIR PRECAUTIONS 14.8
VALVE STEM 14.8
TIRE VALVE AND STEM INSPECTION 14.8
VALVE STEM INSTALLATION - RUBBER 14.8
VALVE STEM INSTALLATION - METAL 14.8
TIRE INSTALLATION 14.9
TIRE MOUNTING 14.9
TIRE BALANCING 14.11
TIRE BALANCING 14.11
TROUBLESHOOTING 14.13
TROUBLESHOOTING 14.13

© 2009 Polaris Sales Inc.

GENERAL / SAFETY

WARNINGS / PRECAUTIONS

WARNING

If a consumer wishes to replace the Original Equipment Manufacturer (OEM) tires with another brand of tire, Victory recommends contacting the tech-line department of the tire manufacturer being considered to ensure compatibility. Victory makes no other recommendation other than the OEM tires. Tires other than OEM may or may not adversely affect the handling characteristics of the motorcycle or may not have adequate clearance between tire and various parts of the motorcycle.

WARNING

Victory motorcycles are produced using the designated tires listed as original equipment. This includes field testing to ensure stability and superior handling. The use of tires other than original equipment may cause instability which can lead to a crash resulting in serious injury or death. Use only the recommended tires inflated to the recommended tire pressures.

Operating the motorcycle with damaged rims creates a safety hazard including air pressure loss, steering imbalance and/or reduced steering control. Do not attempt to repair or straighten damaged rims.

The use of tire valves and valve cores other than original equipment replacement Victory parts could cause tire deflation during driving. Always use genuine Victory parts or their equivalent. Be certain to install the valve stem caps securely. Do not allow the motorcycle to be ridden without properly installed valve stem caps.

WARNING

Do not attempt to repair tires that have:

- Punctures with a diameter of greater than 6mm (0.240").
- Cuts with a length of greater than 6mm (0.240").
- Any punctures or cuts on the sidewall of the tire.
- Tread depth of less than 1.6mm (.063") for the front tire.
- Tread depth of less than 1.6mm (.063") for the rear tire.
- Ply separation
- Tread separation
- Severe tread cupping.
- Cuts, gouges or scratches on the sealing surface of the bead.
- Flat spots on the tread.
- Bubbles, separation or any unusual damage to the inner liner of the tire.
- Chemical sealants or balance additives added to the tire.

WARNING

All repairs must be made from inside the tire. Victory recommends the use of “head-type” plugs such as: Tech *Tire Repair*™ Uni-Seals. Complete Tech *Tire Repair*™ kits are commonly available at most automotive parts outlets.

WARNING

No form of temporary repair should ever be attempted. Secondary damage caused by a penetrating object may not be detected and tire or tube deflation may occur at a later date.

© 2009 Polaris Sales Inc.

WARNING

It is dangerous to ride with a worn tire. When a tire reaches the minimum tread depth listed below, replace the tire immediately.

FRONT TIRE MINIMUM TREAD DEPTH	REAR TIRE MINIMUM TREAD DEPTH
1.6 mm (.063") (1/16 inch)	1.6 mm (.063") (1/16 inch)

CAUTION

Two of the biggest factors contributing to premature tire wear are overloading and under-inflation. Do not deviate from the specifications for loading or inflation.

TIRE DATA

TIRE PRESSURE / LOADING

Refer to Chapter 2 or to the decal on the motorcycle for tire pressure and loading information.

WHEEL DATA

WHEEL SPECIFICATIONS

Item		Standard	Service Limit
Front Wheel			
Front Wheel Size		3.00 x 18	-
Front Wheel Runout (Billet and Cast Type)	Axial	∠ .75 mm (.030 inch)	2.0 mm (.080”)
	Radial	∠ .75 mm (.030 inch)	2.0 mm (.080”)
Rear Wheel			
Rear Wheel Size		8.50 x 18	-
Rear Wheel Runout (Billet & Cast Type)	Axial	∠ .75 mm (.030 inch)	2.0 mm (.080”)
	Radial	∠ .75 mm (.030 inch)	2.0 mm (.080”)

SPECIAL TOOLS

SPECIAL TOOLS

Rim Protectors: PV-43536

Tire Irons (for manual tire changing): Commercially available

© 2009 Polaris Sales Inc.

TIRE INSPECTION

TIRE WEAR PATTERNS & GENERAL CAUSES

WEAR PATTERNS AND GENERAL CAUSES	
SYMPTOM	**CAUSE**
Wear on Left Side	Riding on Crowned Roads
Edges Worn	Underinflation or Excessive Loads
Excess Wear in the Middle of Tire	Over-inflation or Tire Abuse
Cracks in Tread Grooves	Underinflation, Excessive Loads, Suspension Bottoming
Tread Block Cupping (Usually Front Tire -See Below)	Normal Braking Wear

OZONE CRACKING

Ozone cracking usually shows up on the sidewalls of tires and is caused by sunlight, electric motor emissions, smog, or other environmental factors. Ozone cracking does not pose a problem unless the cracks reach the cords. If this occurs, moisture may penetrate the carcass of the tire causing cord separation. Tires showing signs of severe ozone cracking (cords visible at the bottom of the cracks) must be replaced.

FRONT TIRE CUPPING

Front of tread block worn more than rear of tread block:

- The cupping of front tires is somewhat normal.
- Rear tires are subjected to forces in both directions. The forces of braking and acceleration result in even tire wear.
- Front tires are subjected only to the forces of braking. When the brakes are applied, tire deflection is increased and wear occurs in only one direction.
- Incorrect tire pressure is the number one cause of excessive tire cupping. Too little tire pressure causes the tire to over-deflect which increases the amount of scrubbing and causes more tire cupping.
- Binding or improperly assembled front forks can also contribute to excessive tire cupping. If the front forks do not react as they should the tire acts as the sole suspension component and tread deflection increases.

© 2009 Polaris Sales Inc.

TIRE CHANGING

GENERAL

There are three generally acceptable methods to dismount and mount a tubeless motorcycle tire from its rim. Furthermore, there are countless variations for each of the three methods.

The three general methods are:

- Pneumatic or electrically operated tire machine.
- Manually operated tire machine.
- Manual manipulation of tire irons.

The seal between the tire and its rim is one of the most critical factors contributing to the safe operation of the wheel/tire assembly. Each of the three generally acceptable methods to dismount and mount tires is permissible and recommended by Victory. However, careless or improper work habits can damage both the tire and rim regardless of which method is used.

The pneumatic or electrically operated tire machine is preferred as it is the most efficient method to dismount and mount tires. It is also the most expensive way to change tires.

The manually operated tire machine is the next preferred method to dismount and mount tires. It can be just as efficient as a power assisted tire machine. With some types of manually operated tire machines, it will be necessary to remove the belt driven sprocket to gain sufficient clearance for tire removal.

Manual manipulation of tire irons is the least preferred method of tire dismounting and mounting. It will not generally deliver the same efficiency as the other two methods and greater care needs to be taken when performing the operation. Use care not to damage or stress the tire bead when using tire irons. Be sure opposite bead is in drop center of wheel when mounting and dismounting the tire.

Be very careful not to damage the rim, tire, inner tube, brake disk or sprocket regardless of which method is used.

The following method describes the procedure using manually manipulated tire irons. Other than the actual operation of various tools, the general concept is the same regardless of which method is used.

The following procedure shows the front tire being removed from its rim. Other than the possibility of interference of the sprocket, the procedure is the same for the rear tire.

NOTE: Rear sprocket bolts and brake rotor bolts have a pre-applied locking agent and bolts should either be replaced or a locking agent applied upon assembly. Refer to Chapter 11 for rear sprocket removal and installation. Refer to Chapter 13 for rear brake rotor removal and installation. Brake rotor bolts should not be re-used.

© 2009 Polaris Sales Inc.

TIRE REMOVAL

TIRE REMOVAL (TYPICAL)

1. Remove wheel / tire assembly from motorcycle (front refer to Chapter 12, rear refer to Chapter 13).

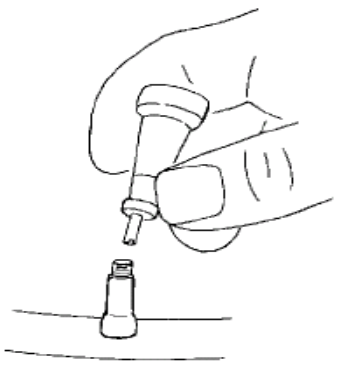

Fig. 1

2. Remove valve core from valve stem and let all air escape. (Fig. 1)

CAUTION

If the tires have a directional arrow it must be observed and the tire installed correctly.

3. Mount the wheel assembly into a tire bead breaker and break the bead. (Fig. 2)

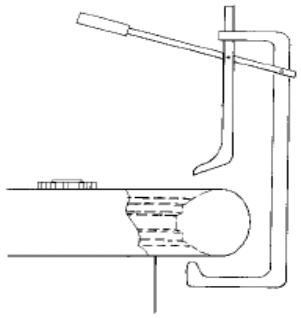

Fig. 2

4. Flip the wheel assembly over and break the bead on the other side.

CAUTION

IMPORTANT: Take great care not to bend or otherwise damage the brake disc and/or belt driven sprocket. If the bead breaker being used interferes with either the brake disk and/or belt driven sprocket, remove the disc or sprocket as required.

NOTE: This procedure can be performed on an empty drum or similar fixture. The top lip of the drum should be covered with protective material or split hose to protect the rim. (Fig. 3)

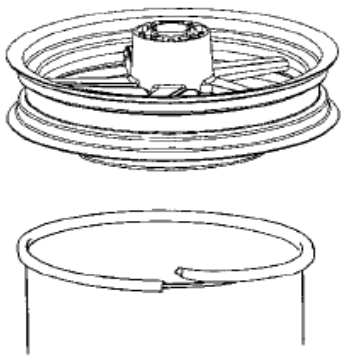

Fig. 3

5. Position wheel assembly so brake disc will not be damaged and rim will not be scratched.
6. Push tire down and lubricate tire bead with tire lubricant on both sides of tire. (Fig. 4)

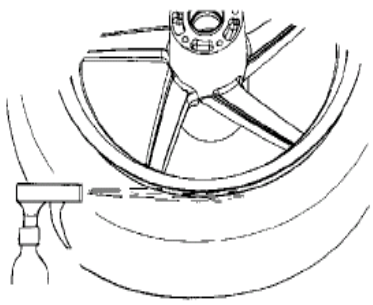

Fig. 4

7. Install rim protectors at 12:00 and 2:00 positions. (Fig. 5)

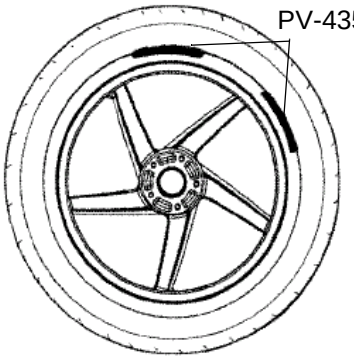

Fig. 5

Rim protectors PV-43536

© 2009 Polaris Sales Inc.

8. Stand opposite of rim protectors. Use your knee to push tire bead down into the rim's drop center at location (Fig. 6, A) while pulling bottom bead up into drop center. Beads must be kept in drop center during following steps.
9. With both beads in the drop center, slide a tire iron between tire bead and 12 o'clock rim protector (Fig. 6, B), lift the bead up with the tire iron, and hold.

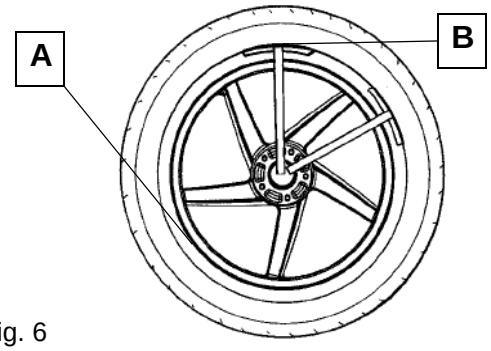

Fig. 6

10. Using another tire iron to lift the bead at the 2 o'clock position.
11. Remove the 2 o'clock tire iron and slide rim protector to the 4 o'clock position, and lever the bead up.

IMPORTANT: The top and bottom tire beads that are opposite the area being worked with the tire irons must continually be pushed into the drop center of the wheel, or bead removal will be difficult and tire could be damaged.

12. Continue going around the tire in small steps, until one side of the tire is off the rim.
13. Turn the tire and wheel assembly over on the drum, so the removed bead is on the bottom side.

TUBE TYPE TIRES:

Remove valve stem nut, push stem through rim.

Remove tube and inspect tube carefully for signs of abrasion or other damage.

Replace tube and rim band whenever a tire is removed.

14. Push the tire away from you so the remaining bead is in the drop center of the rim.
15. Lubricate the bead and start it over the rim with a tire iron.
16. In most cases the tire can be forced off of the rim by hand. Continue to work around the tire until the tire is completely dismounted.

WHEEL INSPECTION

VISUAL INSPECTION & RUNOUT

1. Refer to chapter 12 for complete front wheel inspection procedures.
2. Refer to chapter 13 for complete rear wheel inspection procedures.
3. Clean the rim of all rubber particles and corrosion.

WARNING

If any of the following problems are discovered, replace the wheel.

4. Inspect wheel for cracks and/or distortion.
5. Inspect bead seating area of scratches, gouges, distortion or any damage that could create a sealing problem.
6. Inspect wheel for axial runout, measured on a smooth outer edge surface of wheel as shown in Fig. 7 (A).
7. Measure wheel for radial runout (Fig. 7, B)

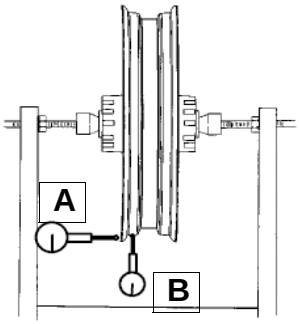

Fig. 7

NOTE: Measure radial runout on tire bead sealing surface of wheel. Be sure surface is clean before measuring

8. Compare measurements of axial and radial runout to specifications listed on page 14.3. Replace wheel if any measurement exceeds Service Limit. Cast or Billet wheels cannot be straightened.
9. Clean the sealing surfaces of the rim thoroughly. Use a soft brush (nylon) soap and water if necessary.

WARNING

Do not scratch or damage sealing surfaces of rim. Loss of air pressure can cause a loss of control and an accident, resulting in serious injury or death.

© 2009 Polaris Sales Inc.

TIRE REPAIR PRECAUTIONS

⚠ WARNING

Only permanent plug-patch repairs of small tread area punctures from **inside** the unmounted tire are recommended. Never perform an exterior repair and never use an inner tube as a substitute for a proper repair. Speed should not exceed 50 MPH for the first 24 hours after repair and the repaired tire should never be used over 80 MPH. Inspect inflation pressure after the tire cools for at least three hours following initial operation.

VALVE STEM

TIRE VALVE AND STEM INSPECTION

1. Remove and inspect valve core (Fig. 8). Replace if seal is worn, deformed or otherwise damaged. Inspect tire valve for cracks or visible damage and replace if necessary.

NOTE: Valve stem replacement is recommended when tire is being replaced.

VALVE STEM INSTALLATION - RUBBER

1. Remove tire from wheel and cut valve stem with a diagonal cutter to remove.
2. Clean tire valve hole and sealing area thoroughly.
3. Lubricate tire valve and hole with P-80 rubber lubricant or equivalent.
4. Place tire valve into hole and screw a tire valve installation tool (commercially available) onto valve.
5. Place a small wood block against the rim to improve leverage point and keep the pulling angle as straight as possible. (Fig. 9)
6. Pull the valve until fully seated and remove tool.

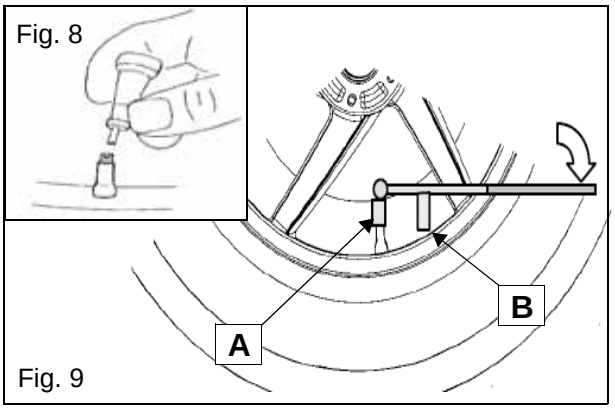

Fig. 8

Fig. 9

VALVE STEM INSTALLATION - METAL

1. Remove tire from wheel and remove old stem.
2. Clean gasket or O-ring seal surface of wheel.
3. Place tire valve (with seal washer or O-ring installed) through hole in rim and secure it hand tight with nut.
4. Refer to Fig. 10. On Type 2 valve stems (with no holding slot) tighten upper nut (A) to stem cap (B).
5. Hold nut (A) to prevent valve stem rotation, and torque lower stem nut (C) to 1.35 Nm (12 lb-in) using an open end torque wrench.
6. Release upper nut from cap and screw it down against stem nut.
7. Hold stem nut and tighten lock nut to 12 lb-in).

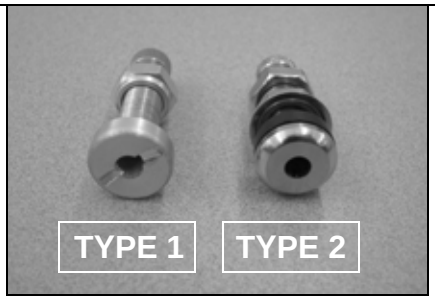

TYPE 1 (HOLDING SLOT)

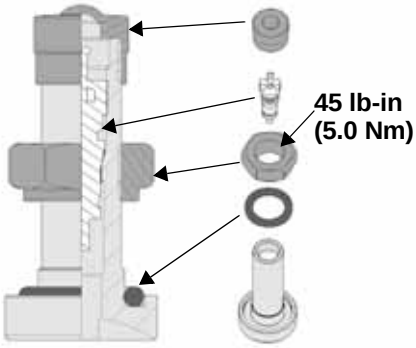

TYPE 2 (NO HOLDING SLOT)

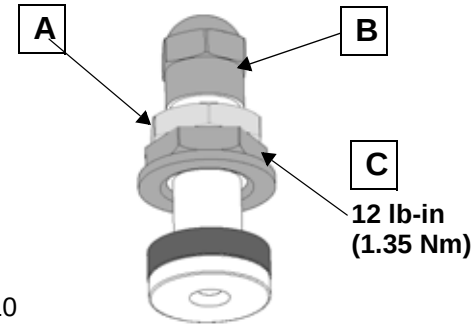

Fig. 10

© 2009 Polaris Sales Inc.

TIRE INSTALLATION

TIRE MOUNTING

1. Lubricate both tire beads with rubber lubricant. (Fig. 11).

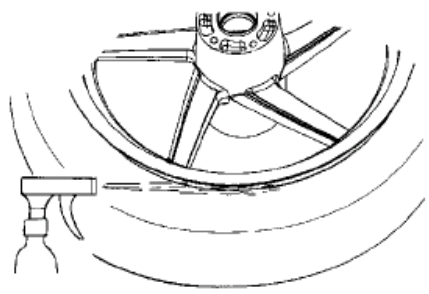

Fig. 11

WARNING

Never apply grease, oil, gasoline, spray type lubricants or anything other than rubber lubricant or a neutral soap and water solution to the tire bead. Doing so can damage the tire.

Balance Dots

Dunlop tires have a yellow dot on the sidewall which corresponds to the lightest part of the tire. This dot is meant to line-up with the tire valve which often is the heaviest part of the rim (although this is not always the case).

WARNING

Victory does not recommend the use of liquid balancer/ sealers. These are a form of temporary repair which may adversely affect ply material and mask secondary damage caused by the penetrating object. Reliance upon sealants can result in sudden tire failure and accident.

Directional Arrows

If tires have directional arrows, they must be observed and tires installed correctly. When tires are manufactured, tread rubber is laid down as a strip and its ends connect as overlapping joints. When the tire is mounted correctly the scrubbing forces of acceleration (rear) or braking (front) press the lap joints together rather than try to separate the joint.

The wheel assemblies must be free of foreign debris that would affect balancing.

Carefully inspect the wheel bearings, seals and axle for damage or corrosion.

Ensure that bead is correctly seated.

TUBE TYPE TIRES:
Install new rim band (rim flap) on rim with hole oriented over valve stem hole in rim.

1. Place tire on drum.

CAUTION

Support tire assembly in such a way that brake disk or belt drive sprocket will not be damaged.

2. Lubricate the bead.
3. Orient tire correctly as to the balance dot and directional arrow.
4. Push tire on to rim until one bead is installed. It shouldn't be necessary to use tire irons to put one side of the tire onto the rim. Remember to keep bead(s) in the drop center of the wheel whenever possible.
5. Turn the tire / wheel over on the drum so the un-installed portion of tire is facing up.

NOTE: Confirm tire is positioned correctly by observing directional arrows. (Fig. 12)

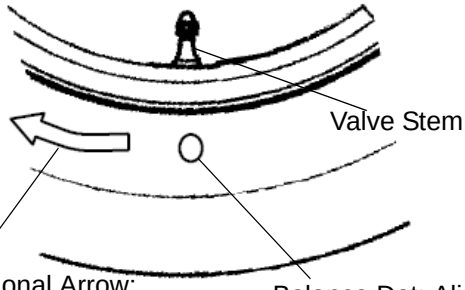

Fig. 12

© 2009 Polaris Sales Inc.

6. For tube type tires, also observe the following:

TUBE TYPE TIRES:
Apply baby powder to new tube and install by inserting valve stem through rim band and rim.

Tube must be completely deflated at this time.

Install the valve stem lock nut a few threads. Do not tighten the lock nut at this time.

Install tube in tire starting at valve stem and working your way around until entire tube is laying inside the tire in a natural position.

Arrange the tube if necessary to eliminate kinks or bends, and be sure the valve stem projects straight out. The stem should form a 90 degree angle with the rim.

Finger tighten lock nut to hold stem in position.

⚠ CAUTION

Make sure your tire irons are smooth and free of scratches or any sharp edges. Polish them if necessary. Do not slide the tire iron in any more than is necessary. When installing tube type tires, avoid lifting the tire iron past vertical to minimize the chance of pinching the tube.

7. Lubricate the tire bead.
8. With your hands, push as much of the remaining tire bead as possible into the rim, pinching both upper and lower beads into the drop center.
9. When no more of tire can be installed by hand, press down on portion of tire in front of you with your knee to keep the top bead in the drop center.
10. Carefully slide a tire iron between the rim and tire at the other side of the un-installed portion of the tire.

NOTE: Be sure both beads are forced as far as possible into the drop center of the rim.

11. Lever the tire iron over and install that portion of tire. Continue to move tire iron in small increments until tire is completely installed.
12. Install valve core if it was removed.
13. Line up balance dot.
14. Confirm that the directional arrows are pointing in the correct direction.
15. Bounce tire on the floor several times while rotating tire. This will expand tire bead outward slightly which will make tire inflation easier. (Fig. 13)

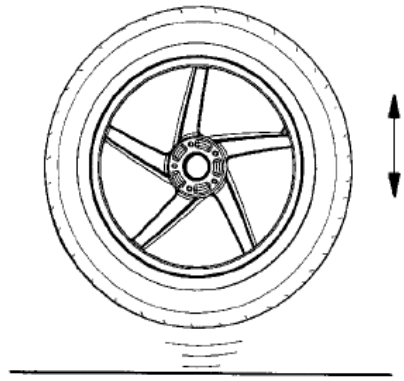

Fig. 13

16. Inflate tire observing the precautions listed below and on page 14.10.

TIRE INFLATION & PRECAUTIONS

- Wear approved eye protection
- Lubricate the tire beads with a tire mounting lubricant before inflation.
- Before inflating a tube type tire, check to be sure valve stem is still straight. If not, rotate tire slightly on rim (in the direction the stem is pointing) to align (Fig. 14).

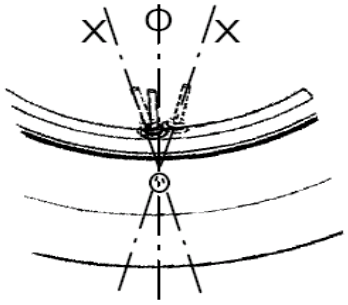

Valve Stem Alignment (Tube Tires)
Fig. 14

- Lock assembly on mounting machine or place in safety cage before inflating to seat beads
- Use extension gauge and hose with slip-on air chuck.
- Stand back with no part of your body within the perimeter of the assembled tire and rim.
- Inflate with core in valve stem
- Never inflate above 42 psi to seat beads
- If beads do not seat by 42 psi. Deflate and repeat procedures. Never use a volatile substance or rubber “donut” to aid bead seating.

© 2009 Polaris Sales Inc.

1. Inspect the line molded onto the tire side walls. It must be the same distance from the rim all the way around the tire. If the distance varies it indicates that tire is not seated properly. (Fig. 15)

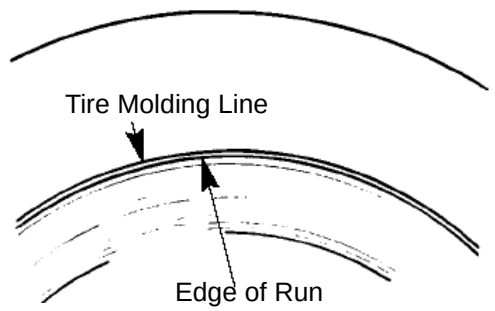

Fig. 15

2. If tire is not seated correctly, deflate and unseat the tire, relubricate the tire beads and repeat inflation procedure.
3. Install wheel assembly onto balance stand and spin. Observe the wheel assembly while it is spinning to make sure the tire is seated properly.
4. Adjust tire pressures to specifications.
5. Balance tire / wheel assembly. Refer to page 14.11.

WARNING

FOR REPAIRED TIRES: Speed should not exceed 50 MPH for the first 24 hours after repair and repaired tire should never be used over 80 MPH. Inspect inflation pressure after tire cools for at least three hours following run-in.

FOR NEW TIRES: Replacement of OEM tires or replacement with differently constructed tires will not immediately produce improved reactions the same as the original tires when new. When new tires are installed, they should not be subjected to maximum power or hard cornering until a reasonable “scrub” period of approximately 100 miles has been covered. This will permit the rider to become accustomed to “feel” of new tires or tire combination, and achieve optimum road grip.

Inspect and adjust tire inflation pressure after tire cools down for at least three hours following “run-in”.

TIRE BALANCING

TIRE BALANCING

WARNING

It is essential that the wheel assembly be balanced before use and rebalanced each time the tire is removed.

Wheel balance affects stability, handling and overall safety of the motorcycle.

All Dunlop street tires should be installed with the yellow balance dot at the tire valve.

The use of liquid balancer/sealer is not recommended.

This procedure will outline balancing wheel assembly in a gravity balance stand. If a pendulum or spin type balancer is being used, reference the manufacturer’s instructions that came with the equipment.

1. Mount wheel assembly in a balance stand.

Typical Balance Stand (Commercially available) (Fig. 16)

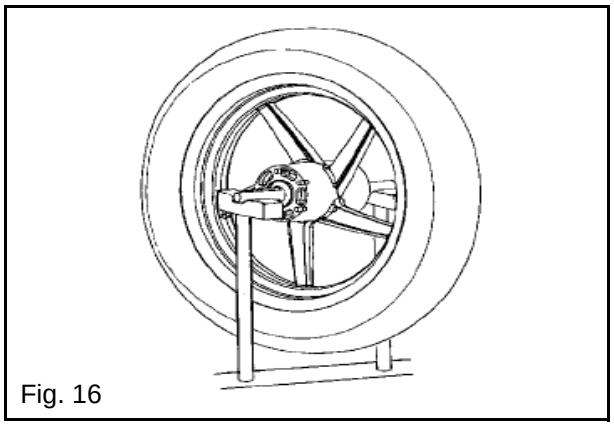
Fig. 16

2. Remove all balance weights. Clean tire and rim thoroughly.

NOTE: While it is possible to balance a wheel assembly with axle and grease-free wheel bearings as the pivot point, it is not recommended. Use an inspection stand that has knife edge bearings and its own axle.

3. Spin the wheel assembly. Allow it to stop on its own and mark the highest (lightest) part of the wheel.

© 2009 Polaris Sales Inc.

4. Repeat the spinning process to verify the heaviest part of the wheel. (Fig. 17)

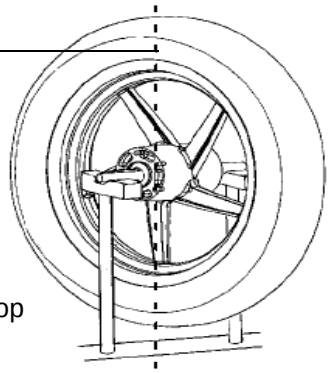

Fig. 17

NOTE: If the bearings are totally free to rotate and the wheel does not stop in the same place each time, the wheel is in balance.

5. Place balance weights at the lightest portion of wheel in small increments. (Fig. 18)

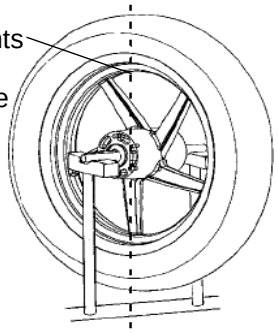

Fig. 18

6. After each addition of weight, spin the wheel assembly and allow it to stop by itself.
7. When correct amount of weight has been added to wheel, it will no longer stop in the same location and the wheel assembly is balanced.
8. Install wheel / tire assembly tire on motorcycle.

Front wheel installation: Chapter 12

Rear wheel installation: Chapter 13

CAUTION

Do not add more than 85 grams (3.0 oz.) of weight to the rear wheel.

Do not add more than 85 grams (3.0 oz.) of weight to the front wheel

If more than the recommended weight is necessary to balance the wheel, dismount the tire and rotate it 90° without regard to the yellow balance dot, and re-balance the wheel / tire.

Adhesive Weight P/N 1520253

© 2009 Polaris Sales Inc.

TROUBLESHOOTING

TROUBLESHOOTING

PROBLEM	POSSIBLE CAUSE	REPAIR RECOMMENDED
Rear Wheel (Wobbles)	Bent rim	Replace
	Worn or damaged wheel bearings	Replace as a set
	Worn or damaged swing arm bushings.	Replace as a set
	Damaged or incorrect tire	Replace rear tire
	Wheel assembly out-of-balance	Balance wheel
	Low tire pressure	Inflate to specification
	Loose swing arm, axle or suspension fasteners.	Torque to specification
Handlebars Oscillate (Wobble)	Bent front axle	Replace
	Worn or damaged wheel bearings	Replace as a set
	Tire mounted incorrectly	Inspect and re-mount tire
	Damaged tire	Replace
	Loose steering stem nut	Adjust to specification
	Incorrect tire	Replace
	Incorrect tire pressure	Inflate to specification
Front Wheel Oscillates (Wobbles)	Bent rim	Replace
	Worn or damaged wheel bearings	Replace as a set
	Damaged or incorrect tire	Replace
	Loose axle or axle pinch bolts	Torque to specification
	Right and left fork not installed at same height	Repair
	Fork oil level incorrect	Fill to specification
	Fork spring free length different between right & left	Replace spring that does not meet specification
	Wheel assembly out-of-balance	Balance wheel

© 2009 Polaris Sales Inc.

NOTES

© 2009 Polaris Sales Inc.

CHAPTER 15
BRAKES

BRAKE SYSTEM SAFETY 15.2
SPECIAL TOOLS 15.3
SPECIFICATIONS 15.3
TORQUE SPECIFICATIONS 15.3
ASSEMBLY VIEWS & ROUTING 15.4
FRONT BRAKE SYSTEM ASSEMBLY AND DETAIL VIEWS 15.4-15.5
REAR BRAKE SYSTEM, ASSEMBLY AND DETAIL VIEWS 15.6-15.7
MASTER CYLINDERS 15.8
FRONT BRAKE / CLUTCH MASTER CYLINDER 15.8
REAR BRAKE MASTER CYLINDER 15.9
CALIPERS 15.10
FRONT BRAKE CALIPER 15.10
REAR BRAKE CALIPER 15.11
BRAKE SYSTEM OPERATION 15.12
MASTER CYLINDERS / BRAKE CALIPERS / DELAY VALVE / PROPORTION VALVE 15.12
BRAKE SYSTEM SERVICE 15.13
BRAKE FLUID REPLACEMENT & BLEEDING PRECAUTIONS 15.13
BRAKE BLEEDING / FLUID CHANGE 15.14
FRONT BRAKE PAD REPLACEMENT 15.17
REAR BRAKE PAD REPLACEMENT 15.18
BRAKE DISC INSPECTION 15.20
FRONT BRAKE MASTER CYLINDER / CLUTCH MASTER CYLINDER SERVICE . . 15.20
FRONT MASTER CYLINDER INSTALLATION 15.23
FRONT CALIPER REMOVAL 15.23
FRONT CALIPER SERVICE 15.24
FRONT CALIPER INSTALLATION 15.27
REAR MASTER CYLINDER REMOVAL 15.28
REAR MASTER CYLINDER INSTALLATION 15.28
REAR CALIPER SERVICE 15.29
REAR CALIPER INSTALLATION 15.31
ANTI-LOCK BRAKE SYSTEM (ABS) 15.32
ABS SYSTEM SAFETY PRECAUTIONS 15.32
ABS GENERAL INFORMATION 15.32
ABS SYSTEM COMPONENTS 15.33
ABS OVERVIEW OF OPERATION 15.33
ABS SYSTEM COMPONENTS 15.34
ABS SYSTEM CIRCUIT DIAGRAMS 15.35
ABS SYSTEM WIRING DIAGRAMS 15.35
ABS SYSTEM - FRONT BRAKE 15.36
ABS SYSTEM - REAR BRAKE (LINKED) 15.37
ABS SYSTEM - WIRING HARNESS / TIE STRAP LOCATION 15.38
ABS SYSTEM - MODULE CONNECTIONS 15.39
ABS BRAKE VACUUM BLEEDER 15.40
ABS FLUID CHANGE 15.40
ABS REAR (LINKED) BRAKE BLEEDING 15.40
ABS FRONT BRAKE SYSTEM BLEEDING 15.42
ABS FRONT BRAKE SUPPLEMENTARY BLEEDING PROCEDURE 15.43
FRONT BRAKE LEVER RESERVE INSPECTION 15.44
ABS TROUBLE CODES 15.45
TROUBLESHOOTING 15.46
TROUBLESHOOTING - BRAKE SYSTEM 15.46
TROUBLESHOOTING - ABS BRAKE SYSTEM 15.48

© 2009 Polaris Sales Inc.

BRAKE SYSTEM SAFETY

GENERAL

Use only genuine VICTORY replacement parts when servicing the brake system. Clean all system components prior to disassembly, including the fluid reservoir cover(s) to reduce the chance of debris entering the system during repair or maintenance work. Start with a clean work area away from dust, water or other contamination. Cleanliness is very important for proper brake system maintenance and repair. Follow procedure outlined in this manual carefully, including fastener torques and the application of special lubricant in required areas. Special lubricants are included with service kits.

The following warnings apply to Anti-Lock Brake Systems (ABS) as well as non-ABS. ABS specific information begins on page 15.32.

WARNING

Contaminated brake discs or pads greatly reduce the amount of stopping force available & increase stopping distance. Brake discs can be cleaned using a commercially available brake disc cleaner. Follow the manufacturer instructions printed on the container. NEVER attempt to clean contaminated brake pads. Always replace pads as a set.

WARNING

The brake system uses ethylene-glycol based fluid (DOT 4). Do not use or mix with different types of fluid such as silicone-based (DOT 5) or any petroleum-based fluid.

Do not let water or moisture enter the master cylinder when refilling. Water significantly lowers the boiling point of the fluid and can result in poor braking.

Do not use brake fluid taken from old, used or unsealed containers. Never reuse brake fluid.

Keep brake fluid containers completely sealed and out of reach of children.

Brake fluid should be completely replaced every 24 months or 12,500 miles.

Brake hoses should be replaced whenever the exterior shows signs of deterioration or damage. Brake hoses should be replaced every four (4) years regardless of their exterior condition.

Bleed the brake system any time it is disassembled or when the brake action is spongy.

Always inspect the operation of the brakes before riding the motorcycle.

Replace sealing washers whenever brake lines are removed.

Always remove the master cylinder fluid reservoir cover and inspect the fluid level when brake pads are replaced.

NOTICE: Brake fluid and some types of brake cleaners will damage paint, plastics and some rubber compounds. Cover or remove plastic and painted parts before working on the brake system. If brake fluid is spilled on cosmetic surfaces, immediately rinse the area with a mild solution of soap and water until all traces of brake fluid are removed. Make sure the master cylinder reservoir being worked on is level and clean before removing the cap.

© 2009 Polaris Sales Inc.

SPECIAL TOOLS

BRAKE SERVICE SPECIAL TOOLS

Caliper Piston Pliers . . . . . Commercially Available

Front Brake Lever Reserve Inspection Adapter, ... PV-50104

Front Master Cylinder Snap Ring Pliers . . . . . Commercially Available

Tension Scale (to measure Front Brake Lever Reserve pull force) . . . . . Commercially Available

Vacuum Brake Bleeder. . . . . Commercially Available

Pressure / Vacuum Pump (alternative to Vacuum Brake Bleeder above) . . . PV-43545

SPECIFICATIONS

GENERAL SPECIFICATIONS

BRAKE SYSTEM		
Item	**Standard**	**Service Limit**
Brake Fluid	DOT 4 (PN 2872189)	Replace every 24 months, 12,500 miles, or if contaminated
Brake Lever Reserve, Front	Non-ABS Models: 45 lbs. (Minimum) ABS Models: 34 lbs. (Minimum)	Less than specified pull to bar contact. See Front Brake Lever Reserve Inspection page 15.44.
Brake Disc Runout	-	.30 mm (.012") (Max)
Brake Disc Thickness, Front	5mm	4.5 mm (.177")
Brake Disc Thickness, Front / Rear	7mm	6.5 mm (.256")
Brake Lever Freeplay (Front)	No Adjustment	-
Brake Pad Friction Material Thickness (Front and Rear)	-	1.0mm (.039 inch)
Brake Pedal Free Play (Pedal Clearance)	1 - 2 mm (.040 - .080")	-
Master Cylinder Diameter, Front (All models)	0.551 in. (14.00 mm)	Replace master cylinder if bore taper or out-of-round exceeds .0015 in. (.04mm)
Master Cylinder Diameter, Rear (2008-2009)	5/8 in. (15.875 mm)	
Master Cylinder Diameter, Rear (2010)	11/16 in. (17.460 mm)	

TORQUE SPECIFICATIONS

BRAKE SYSTEM TORQUE SPECIFICATIONS

Refer to the exploded views in this chapter for components and fastener torque. ABS information begins on page 15.32.

© 2009 Polaris Sales Inc.

ASSEMBLY VIEWS & ROUTING

FRONT BRAKE SYSTEM ASSEMBLY VIEW

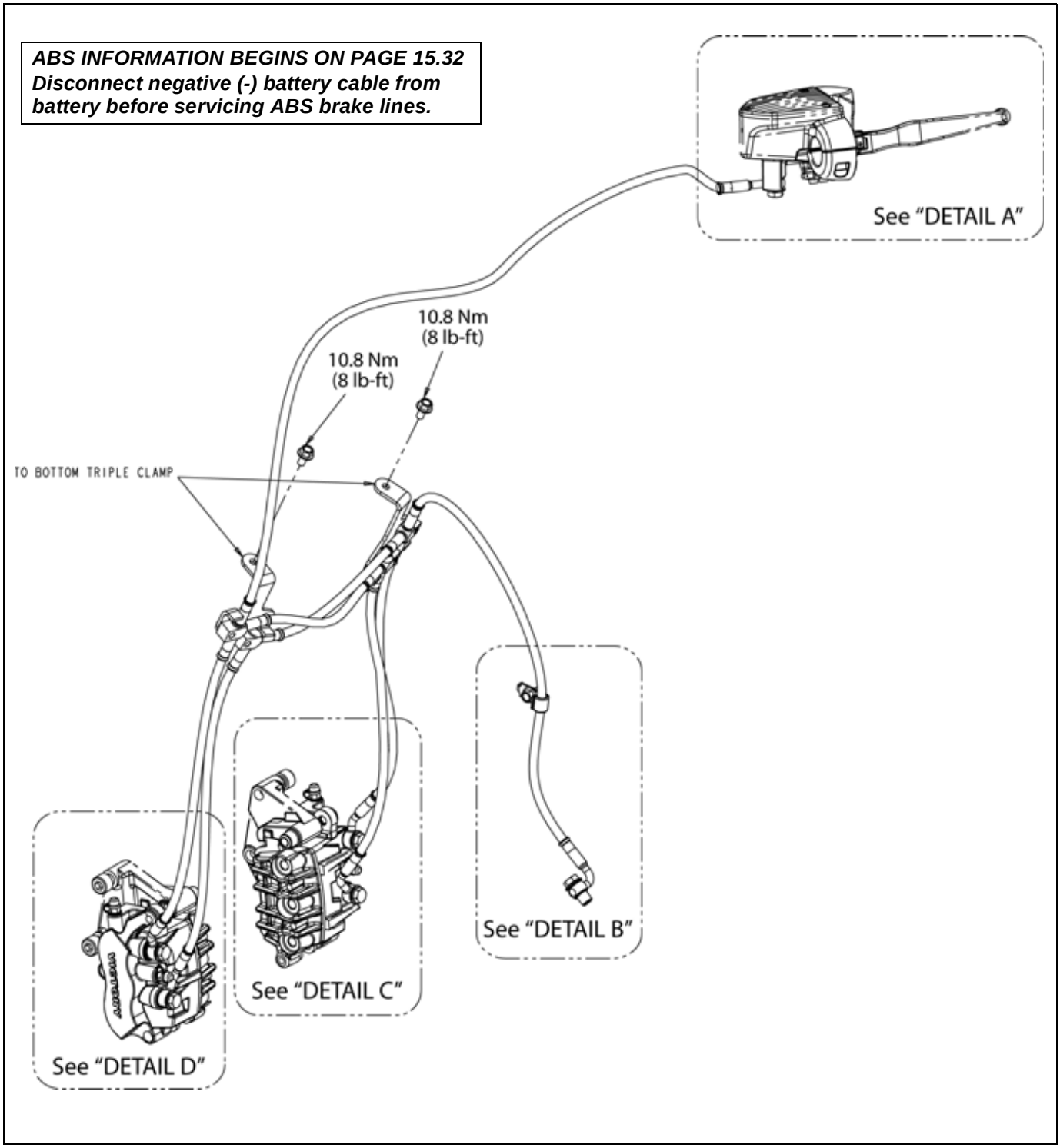

© 2009 Polaris Sales Inc.

FRONT BRAKE SYSTEM DETAIL VIEWS

ABS INFORMATION BEGINS ON PAGE 15.32
Disconnect negative (-) battery cable from battery before servicing ABS brake lines.

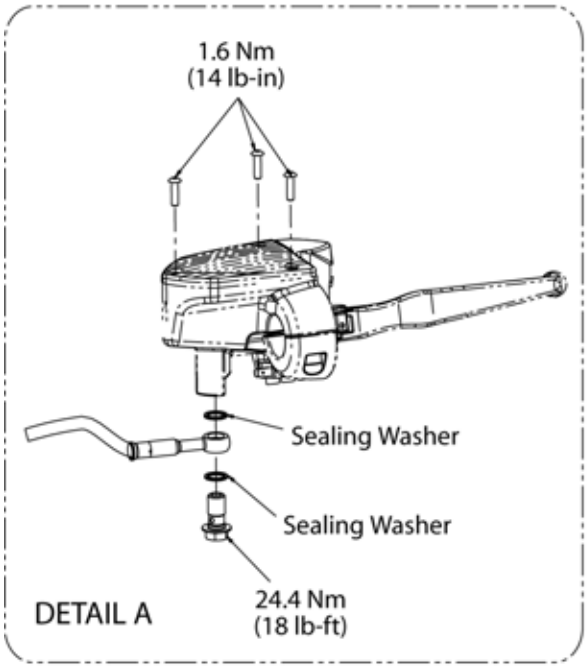

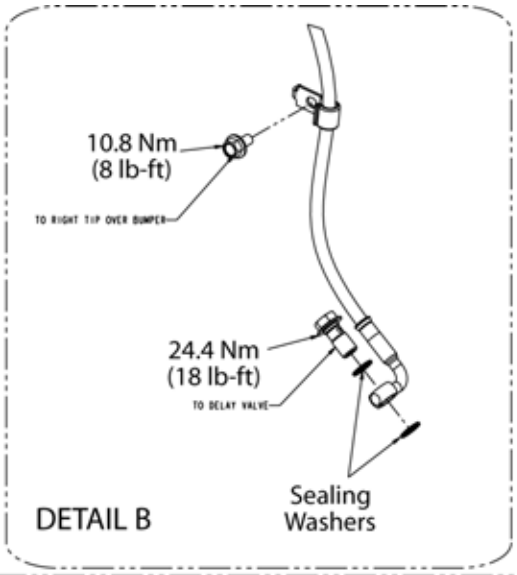

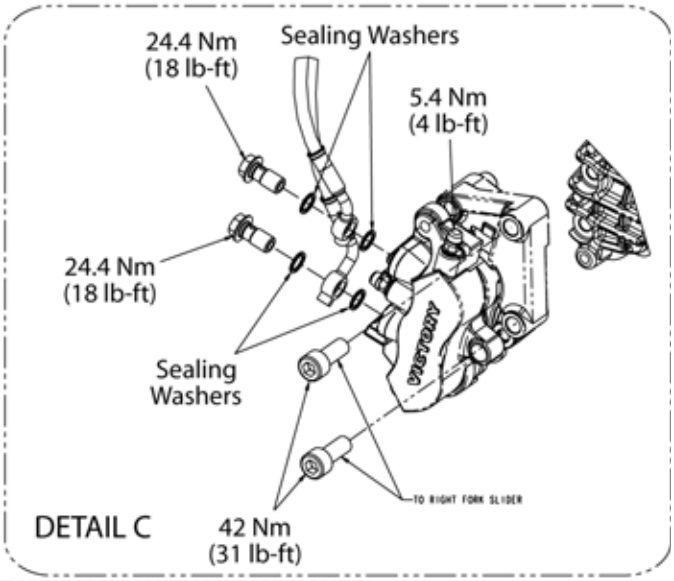

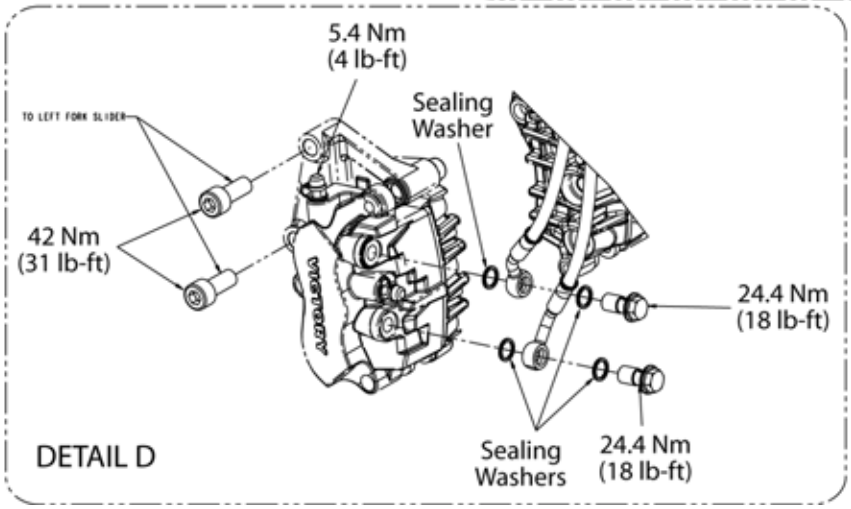

15

© 2009 Polaris Sales Inc.

REAR BRAKE SYSTEM, ASSEMBLY VIEW

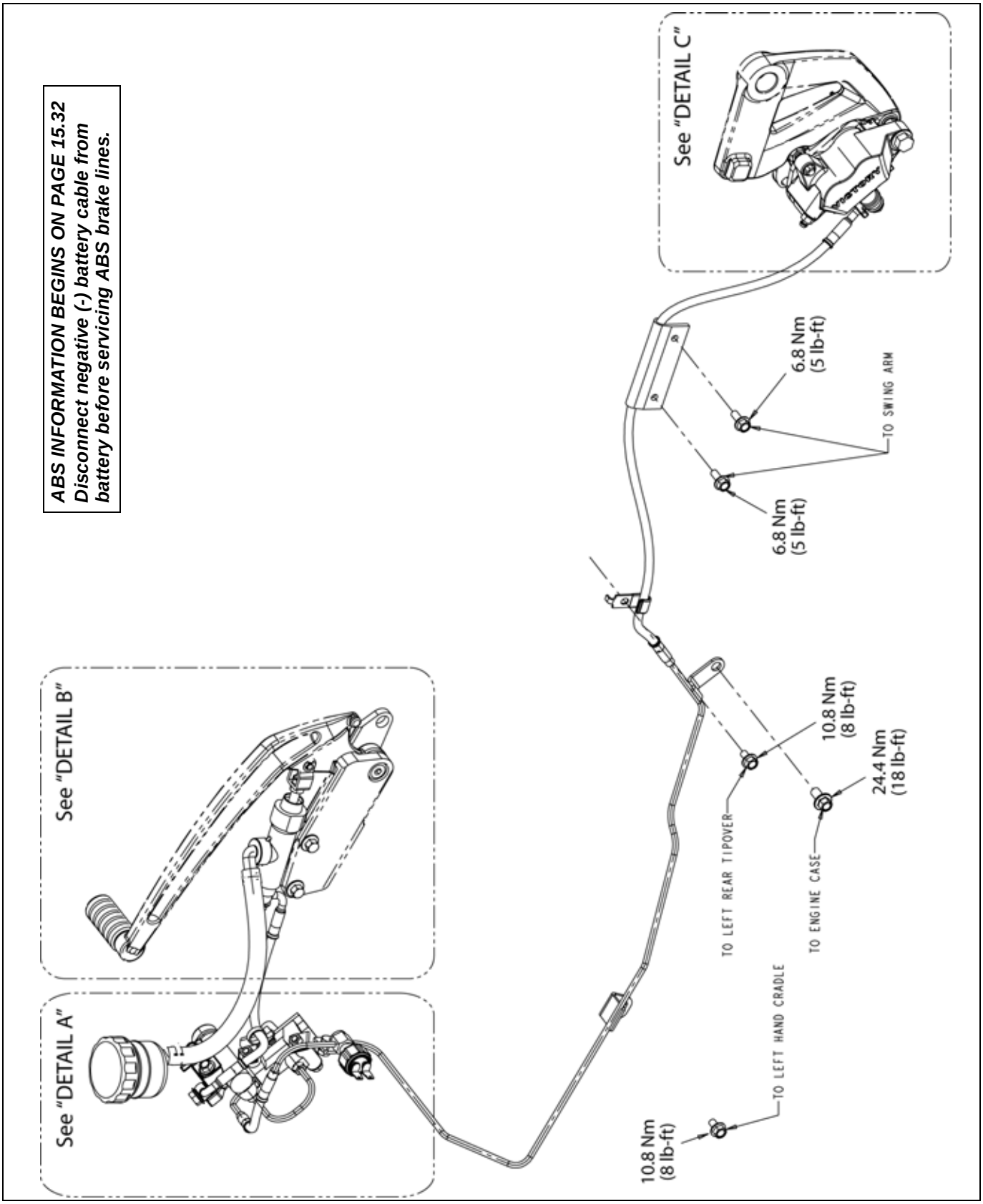

© 2009 Polaris Sales Inc.

REAR BRAKE SYSTEM DETAIL VIEW

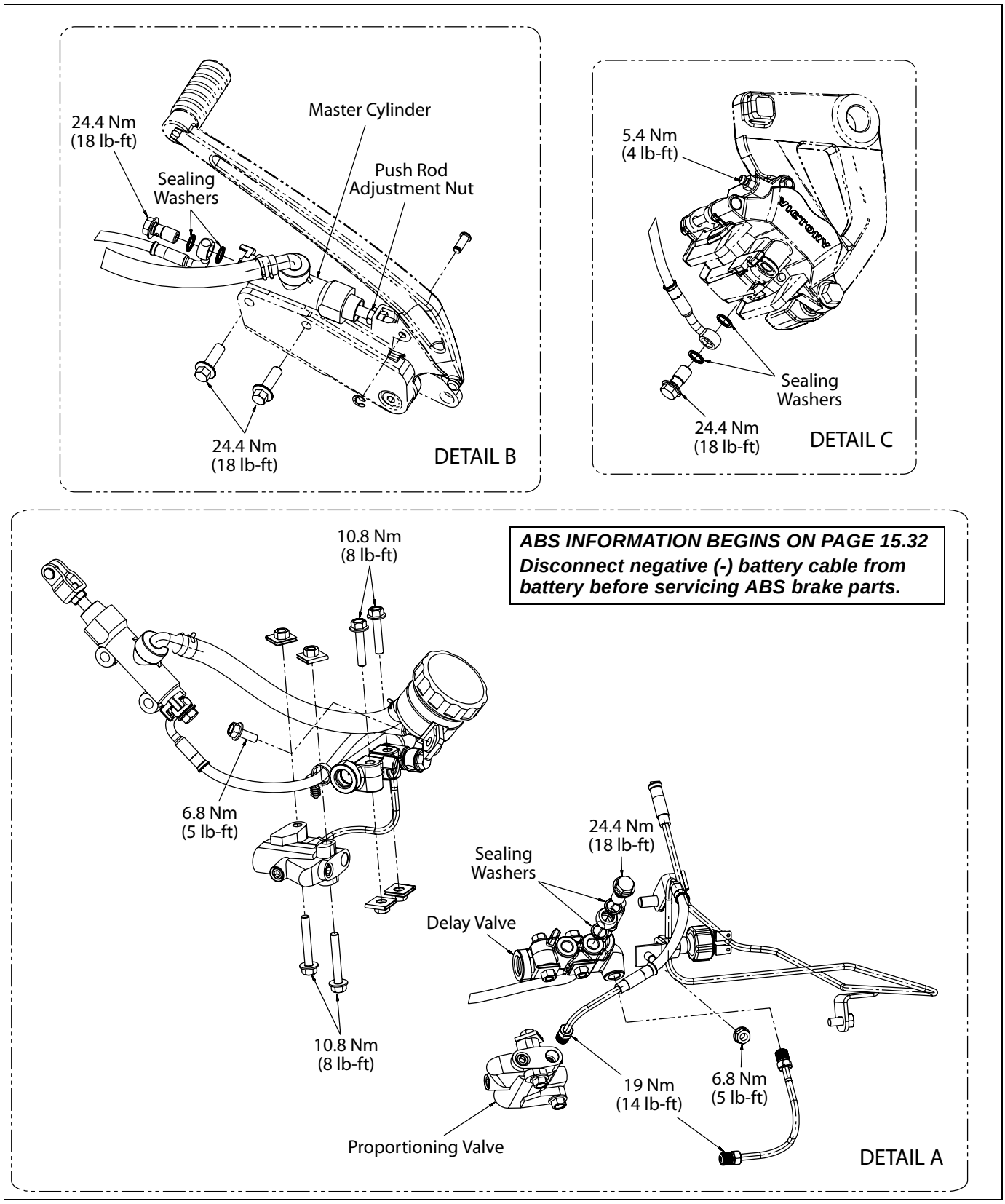

© 2009 Polaris Sales Inc.

MASTER CYLINDERS

FRONT BRAKE / CLUTCH MASTER CYLINDER

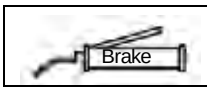

This symbol indicates special lubricant from service kit must be applied to this part.

CCI OIL (009-Z00-313)
Application: **Internal:** Master cylinder bore, piston, and piston seal cups.

SPECIAL GREASE (009-Z00-115)
Application: **External:** Lever pivot screw and contact surface of lever to master cylinder piston.

Refer to assembly views and rebuild procedure for detailed application of special lubricants.

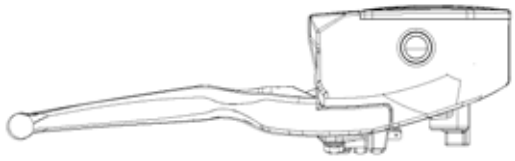

FRONT BRAKE

Follow Front Master Cylinder service procedure for clutch master cylinder rebuild.

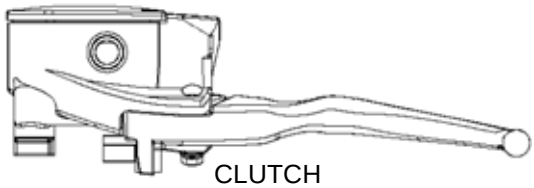

CLUTCH

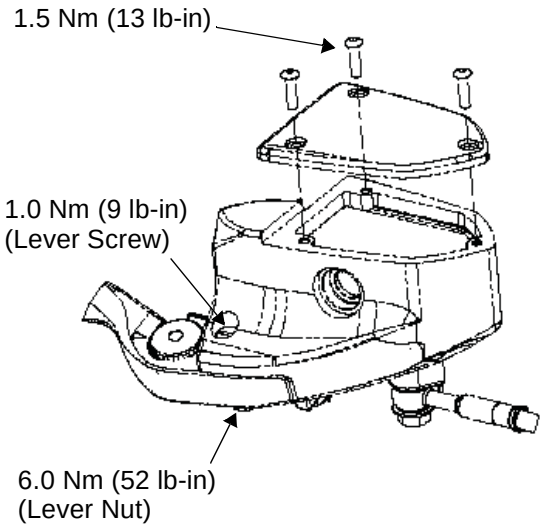

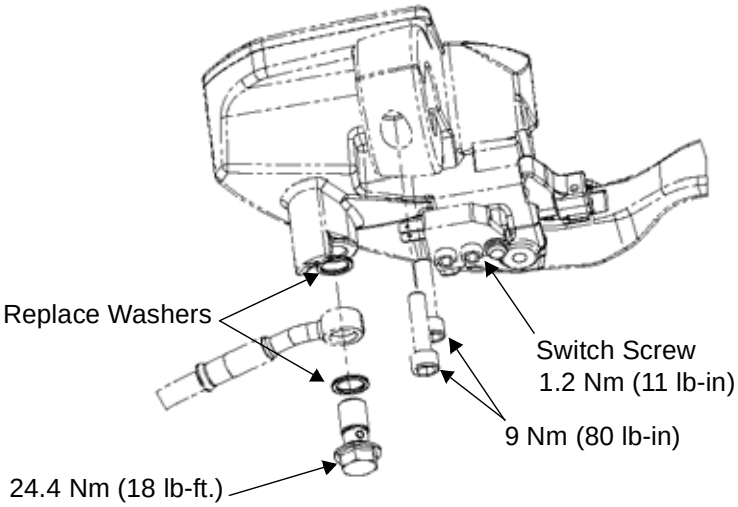

© 2009 Polaris Sales Inc.

REAR BRAKE MASTER CYLINDER

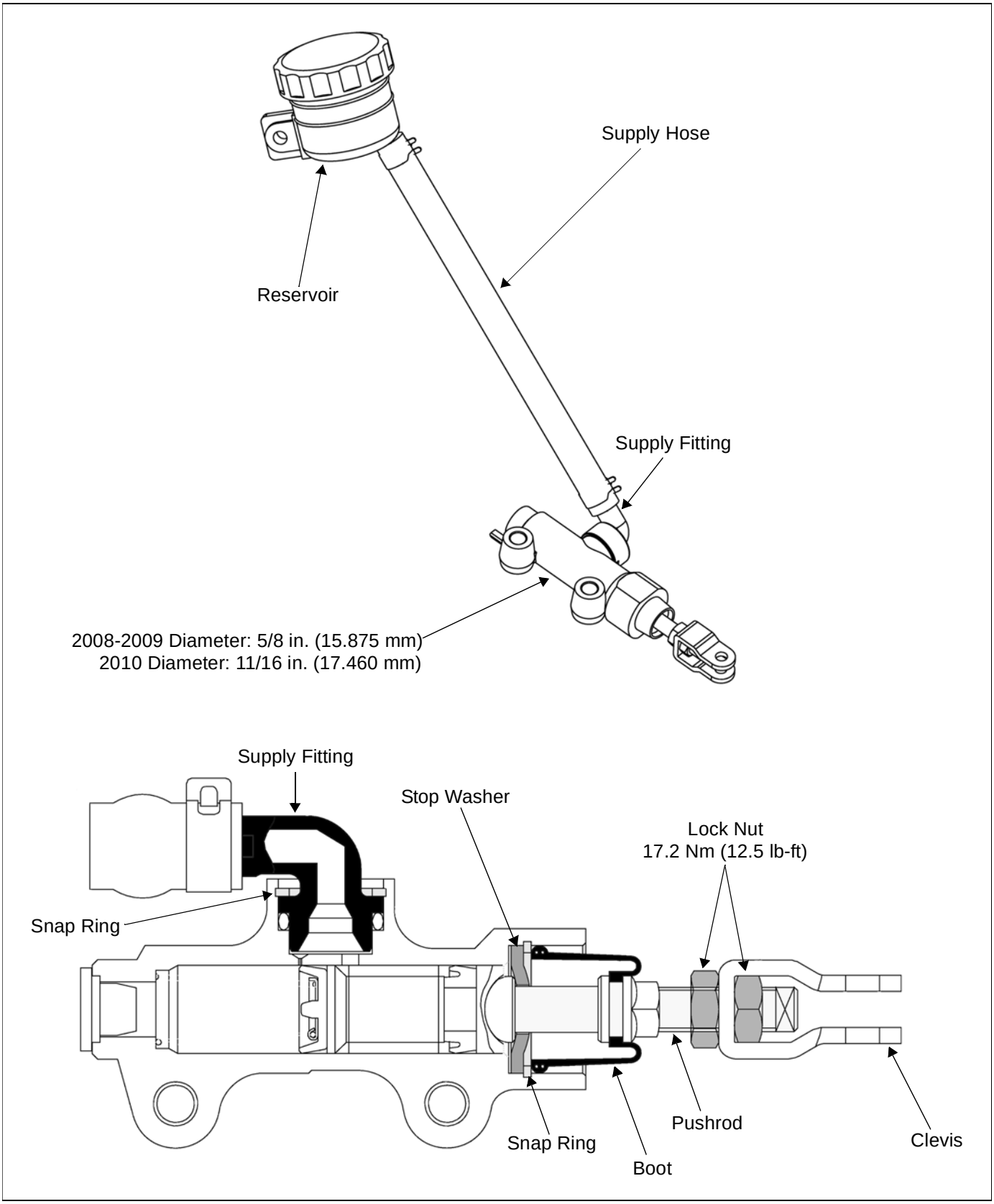

© 2009 Polaris Sales Inc.

CALIPERS

FRONT BRAKE CALIPER

Brake — This symbol indicates special lubricant from service kit must be applied to this part.

CCI OIL (009-Z00-313) Brake

Application: **Internal:** Caliper pistons.

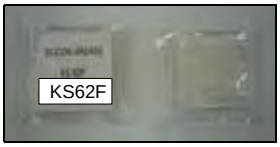

Brake

SILICONE GREASE (009-Z00-111) KS62F

Application: **Internal:** Caliper piston seals, piston dust seals. **External:** O-ring at the tip of the brake pad retaining pin.

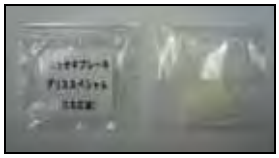

Brake

SPECIAL GREASE (009-Z00-115)

Application: **External:** Rear caliper guide pins / boots.

LH CALIPER SHOWN

Refer to assembly views and rebuild procedure for special oil and grease application

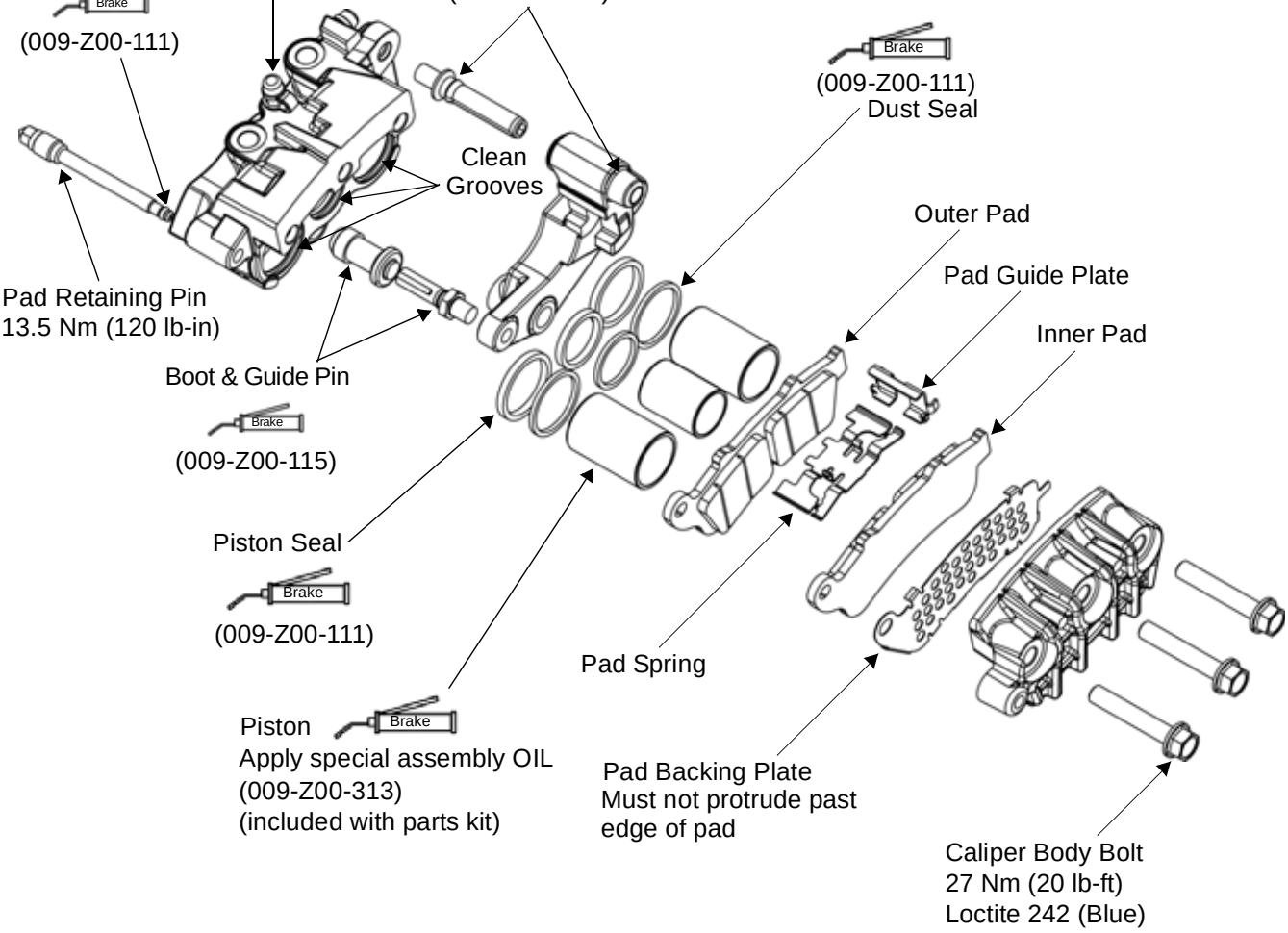

© 2009 Polaris Sales Inc.

REAR BRAKE CALIPER

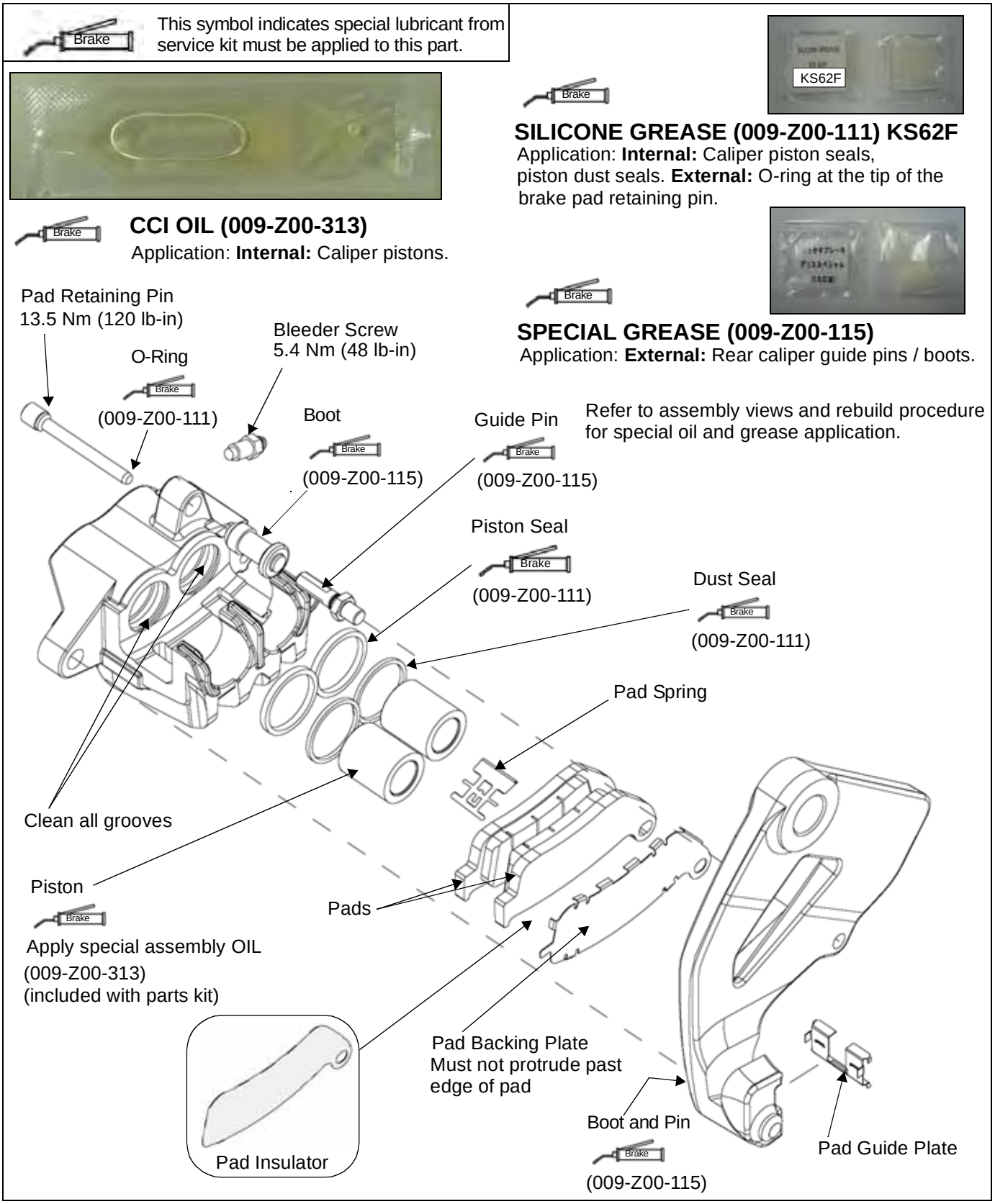

© 2009 Polaris Sales Inc.

BRAKE SYSTEM OPERATION

MASTER CYLINDERS / BRAKE CALIPERS / DELAY VALVE / PROPORTION VALVE

ABS INFORMATION BEGINS ON PAGE 15.32
Disconnect negative (-) battery cable from battery before servicing ABS brake parts.

Conventional (Non-ABS) Linked Brake Configuration Shown

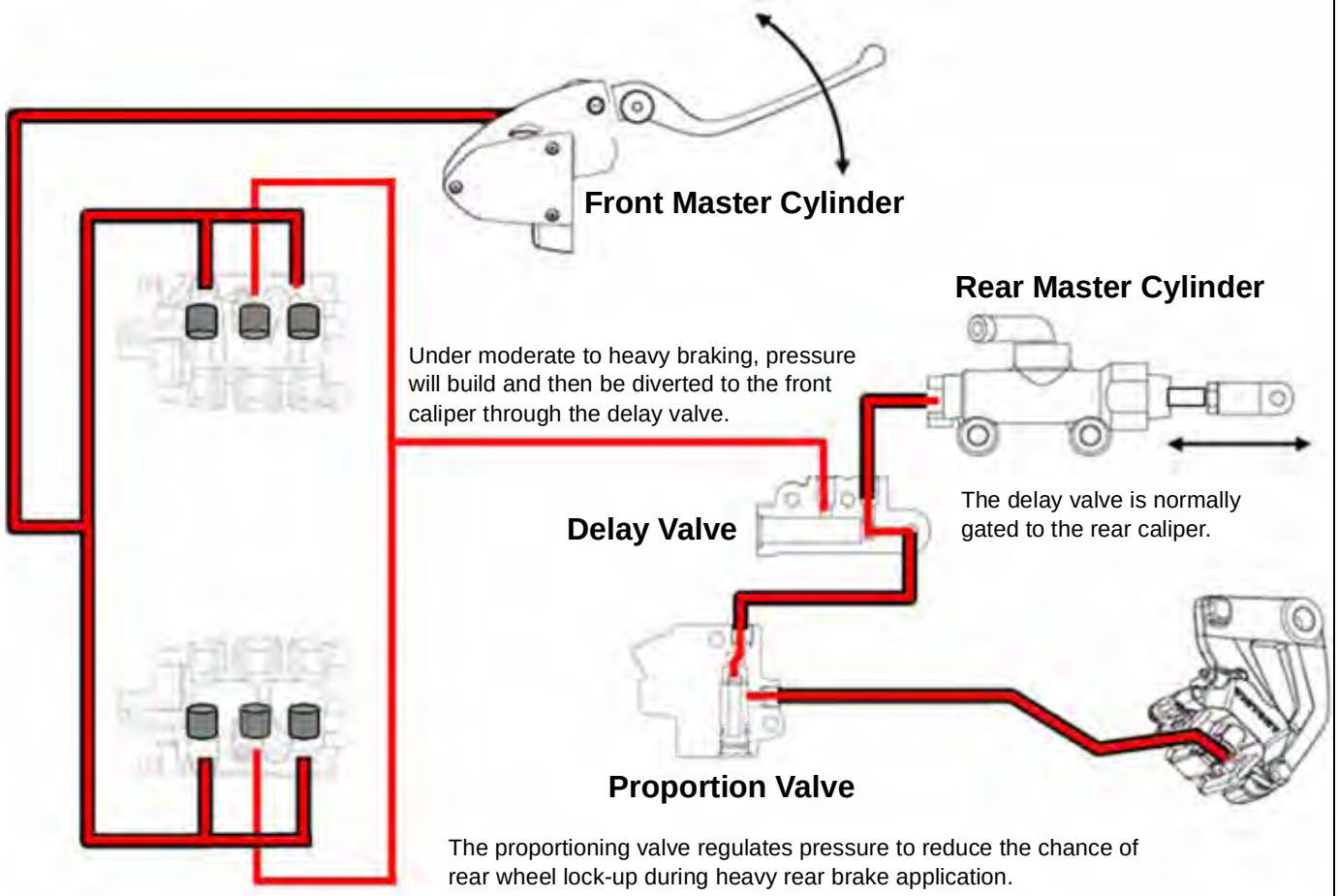

© 2009 Polaris Sales Inc.

BRAKE SYSTEM SERVICE

BRAKE FLUID REPLACEMENT & BLEEDING PRECAUTIONS

WARNING

Contaminated brake discs or brake pads greatly reduce braking performance and increase stopping distance. Do not attempt to clean contaminated pads. Replace them. Clean the brake disc with brake cleaner.

WARNING

This brake system requires ethylene-glycol based fluid (DOT 4). Do not use or mix different types of fluid such as silicone-based or petroleum-based.

WARNING

Do not use brake fluid taken from old, used or unsealed containers. Never reuse brake fluid. Brake fluid can accumulate moisture, reducing it's performance.

WARNING

Brake fluid is poisonous. Keep brake fluid tightly sealed and out of reach of children.

WARNING

A soft, spongy feeling in the brake lever and/or brake pedal could indicate a hazardous condition in the brake system. Do not operate the motorcycle until the failure in the brake system is corrected.

WARNING

An unsafe condition exists when air is trapped in the hydraulic brake system. Air in the brake hydraulic system acts like a soft spring and absorbs a large percentage of the pressure developed by the master cylinder. Without this pressure, the braking system cannot develop full braking force to allow for safe, controlled stops. It is extremely important to bleed the brakes properly after any brake system work has been performed or when inspection reveals spongy brakes.

Keep these points in mind when bleeding hydraulic brakes:

- The master cylinder reservoirs have limited capacities. It is easy to empty them during the bleeding procedure. This introduces air into the system which you are trying to purge. Watch the reservoir closely and add fluid when necessary to keep the level above the LOW mark and prevent air from re-entering the system.
- Do not pump the lever or pedal aggressively when bleeding the brake system. Rapid movement could cause air bubbles to form in the fluid. (See ABS Brake Bleeding Procedure for ABS equipped vehicles).
- Small amounts of air can become trapped in the banjo bolt fittings at the master cylinder(s), brake lines, and junction points of brake lines. On non-ABS vehicles, these fittings can be purged of air by following a standard bleeding procedure at these fittings (instead of the bleed screw on caliper) if necessary to speed the bleeding process. This is usually only needed if system was completely drained of fluid. Bleed each line connection, starting with the fitting closest to the master cylinder, working toward the caliper, and ending with the bleed screw. (See ABS Brake Bleeding Procedure for ABS equipped vehicles).
- Always torque banjo bolts and other brake system fasteners and components to specified torque.
- Always install NEW genuine Victory parts. Apply special lubricant included in service kits where specified.
- .Always perform a Brake Lever Reserve inspection after brake system bleeding or service.

© 2009 Polaris Sales Inc.

BRAKE BLEEDING / FLUID CHANGE

NOTE: Refer to page page 15.40 for ABS system bleeding procedure.

NOTE: Throughout the following procedure, monitor fluid level in master cylinder reservoir constantly. Do not allow fluid level to fall below minimum level (Fig. 1 and 2).

Remove cover and fill reservoir with DOT 4 brake fluid from a sealed container.

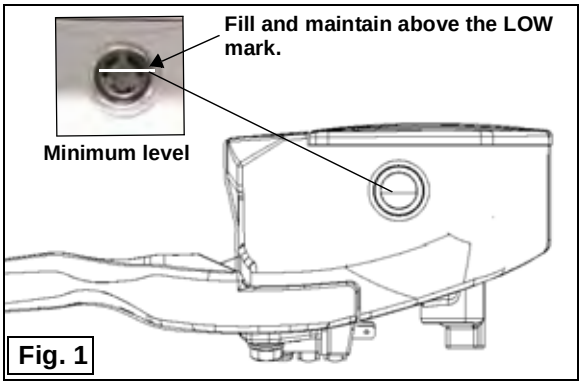

Fig. 1

Use Only Victory DOT 4 Brake Fluid 2872189.

Between fills, set reservoir cover on reservoir to prevent entry of contaminants.

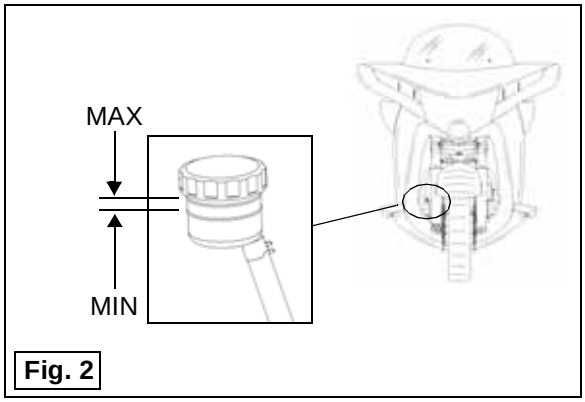

Fig. 2

NOTE: If system is dry or very low on fluid due to parts replacement or disassembly, pump the lever or pedal slowly until air bubbles no longer rise through the fluid in the reservoir. For normal bleeding or system flush, continue on with procedure.

NOTE: Brake systems should be flushed every 2 years or more often if the fluid is discolored. To flush the system, follow normal brake bleeding process, and continue bleeding and filling the reservoir until the fluid moving through the bleeder hose is clear.

FRONT BRAKE SYSTEM BLEEDING

NOTE: Bleed the right front lines and caliper first (closest to master cylinder) and then bleed the left front lines and caliper (farthest from master cylinder).

NOTE: Repeat the bleeding procedure at least once.

ABS NOTE: Refer to page 15.40 for ABS system bleeding procedure.

1. Remove the rubber cap from the top of the *front left-hand caliper* and install an 8mm box end wrench over the bleeder screw and attach a tight-fitting clear hose to the nipple on the screw (as shown for right side caliper below A).
2. Place a small quantity of fresh brake fluid into a small, clear container (B).
3. Place the other end of bleeder hose into container (B).

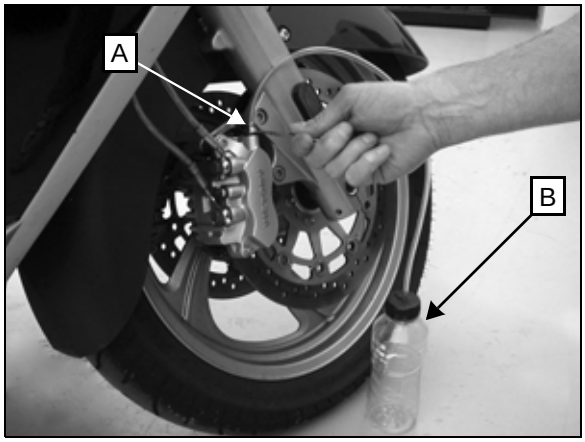

4. *Slowly* pump the brake lever until pressure builds and then hold light pressure on the lever.
5. Open bleed screw until lever pressure is gone then close the bleed screw before you release the lever.
6. Release brake lever.
7. Check level of fluid in reservoir and add if necessary (see Fig.1).
8. Repeat Steps 4, 5, 6, and 7 until brake lever is firm and no air can be seen moving through the clear hose.
9. **Torque bleed screw to 5.4 Nm (48 lb-in).**

© 2009 Polaris Sales Inc.

10. Repeat this process for the *front right caliper*.

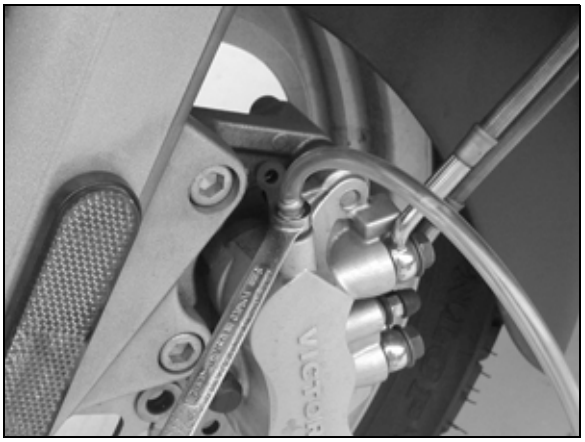

11. Once you have bled both front calipers, repeat this bleeding procedure again to ensure all air has been bled from the system.

12. Inspect brake fluid level. Clean the reservoir cover, diaphragm, diaphragm form plate, and reservoir sealing surface. If diaphragm is extended, return it to normal (flat) position. Install diaphragm, form plate, and cover.

13. Perform *Front Brake Lever Reserve Inspection* on page 15.44 to verify system is completely purged of air.

14. Once front brake system is properly bled and passes the lever reserve inspection, proceed to “Rear (Linked) Brake System Bleeding”.

REAR (LINKED) BRAKE SYSTEM BLEEDING

NOTE: Bleed the right front lines and caliper first (closest to master cylinder), then bleed the left front lines and caliper (farthest from master cylinder), and bleed the rear lines and caliper last.

NOTE: Repeat the bleed procedure at least once.

ABS NOTE: Refer to page 15.42 for ABS system bleeding procedure.

1. Remove the rubber cap from the side of the *front right caliper* and install an 8mm box end wrench over the bleeder screw (C). Connect a tight-fitting clear hose to the caliper bleed screw (C).

2. Place a small quantity of fresh brake fluid into a small, clear container.

3. Place the other end of bleeder hose into the container.

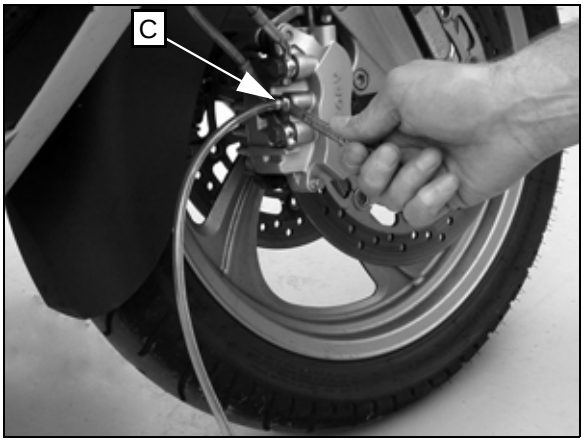

4. Slowly pump brake pedal until pressure begins to build.

5. Apply firm pedal pressure and then hold.

6. Quickly open and close the bleed screw while holding firm pressure on the brake pedal.

IMPORTANT: Firm brake pedal pressure is required during this procedure to ensure the delay valve opens allowing fluid to reach the front calipers.

7. Release brake pedal pressure.

8. Check level of fluid in reservoir and add if necessary (see Fig. 2 on page 15.14).

9. Repeat Steps 4, 5, 6, and 7 until brake pedal is firm and no air can be seen moving through the clear hose.

© 2009 Polaris Sales Inc.

10. **Torque bleed screw to 5.4 Nm (48 lb-in).**

11. Repeat this process for the *front left caliper*.

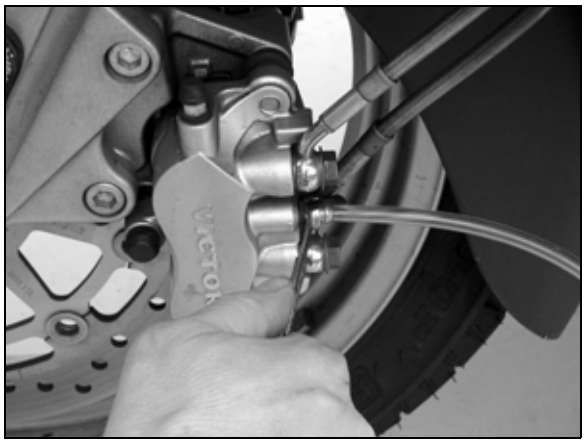

12. Remove the rubber cap from the *rear caliper* and install an 8mm box end wrench over the bleeder screw (D). Connect a tight-fitting clear hose to the caliper bleed screw (D).

13. Place a small quantity of fresh brake fluid into a small, clear container (E).

14. Place the other end of bleeder hose into container (E).

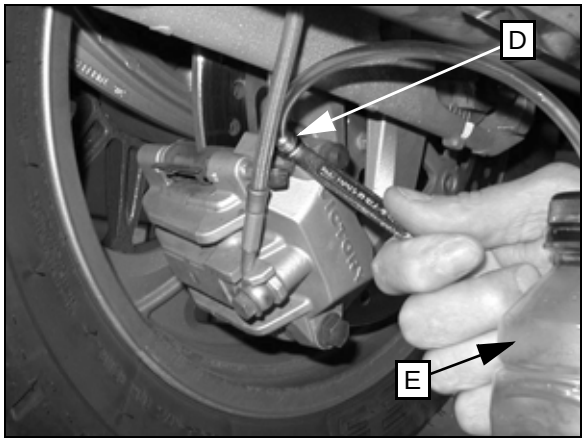

15. *Slowly* pump brake pedal until pressure builds and then hold.

16. Quickly open and close the bleed screw while holding pressure on the brake pedal.

17. Release brake pedal pressure.

18. Check level of fluid in reservoir and add if necessary (see Fig. 2 on page 15.14).

19. Repeat the bleeding procedure to ensure all air has been bled from the system.

20. After completing the bleeding procedure, inspect brake fluid level. Clean the reservoir cover, diaphragm, and reservoir sealing surface. If diaphragm is extended, return it to normal (flat) position. Install diaphragm and cover.

21. Inspect the feel when pressure is applied to the brake pedal. The pedal should feel firm, not spongy.

NOTE: A properly bled rear brake system should not allow the brake pedal to travel more than 20 mm (.79”) with 20 lbs. (9.07 kg) of force applied.

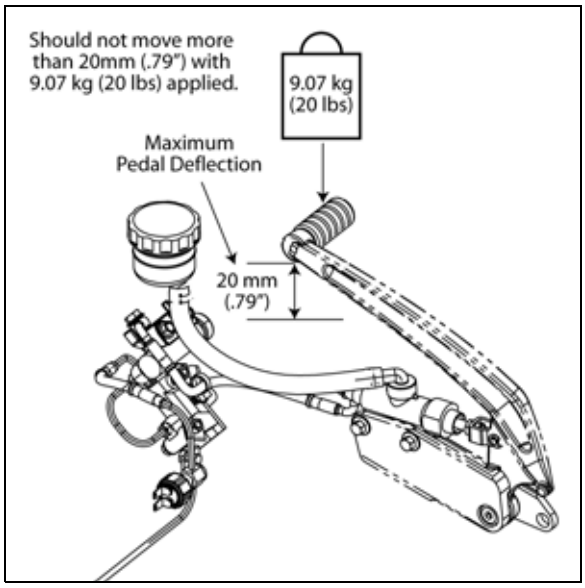

22. If pedal is not firm, repeat bleeding procedure and insect brake system. See Troubleshooting at the end of this chapter.

© 2009 Polaris Sales Inc.

FRONT BRAKE PAD REPLACEMENT

NOTE: Always replace brake pads as a set. Refer to page 2.15 for front pad inspection.

1. Loosen the brake pad retaining pin (A) and remove the brake caliper mounting bolts (B) and caliper.

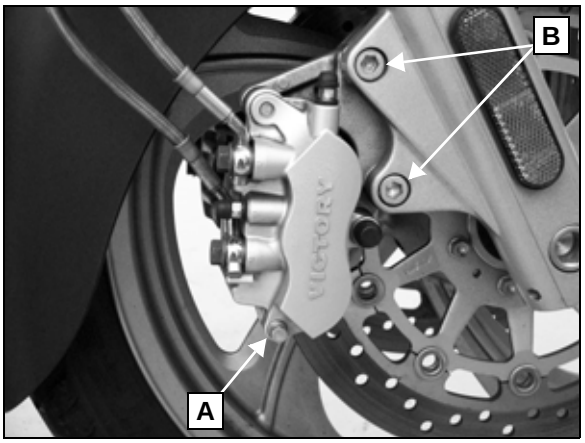

2. Using the existing brake pads, apply inward pressure on the caliper pistons to gain enough clearance to install new brake pads into caliper and onto the disc.

NOTE: Brake fluid will be forced back into the reservoir when pads are pushed back. Remove reservoir cover and monitor fluid level, or attach a hose to the brake bleeder screw (as described in Brake Bleeding on page 15.13) and open the bleed screw while pushing the pads and pistons back.

3. Remove each brake pad from the caliper and discard.

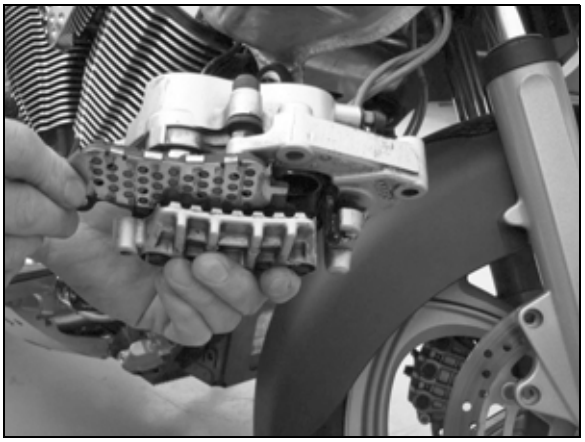

4. Remove the spring plate and pad retainer from the caliper; note direction of plate and retainer for assembly.

5. Wipe brake disc clean with a shop towel sprayed with Victory Brake Cleaner.

6. Inspect piston dust seals (C) for signs of fluid leakage.

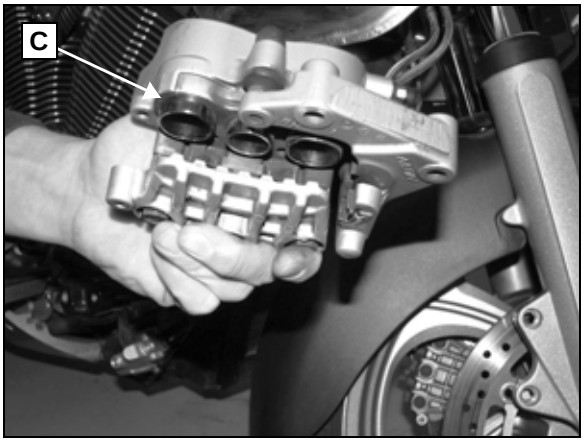

7. Clean caliper body with Victory Brake Cleaner.

8. Install isolator on new inner brake pad. Be sure isolator plate does not protrude from the pad backing plate.

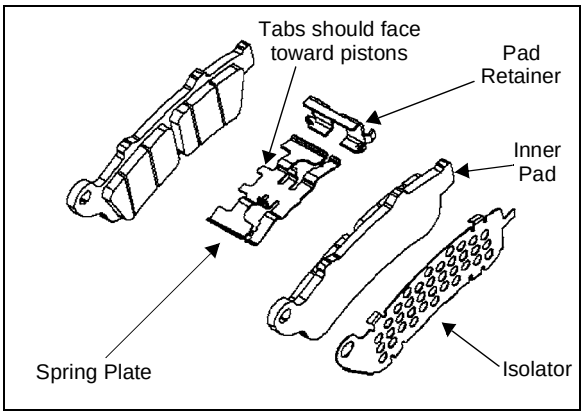

9. Install the spring plate and pad retainer into the caliper.

10. Install caliper. Torque mounting bolts: **42 Nm (31 lb-ft).**

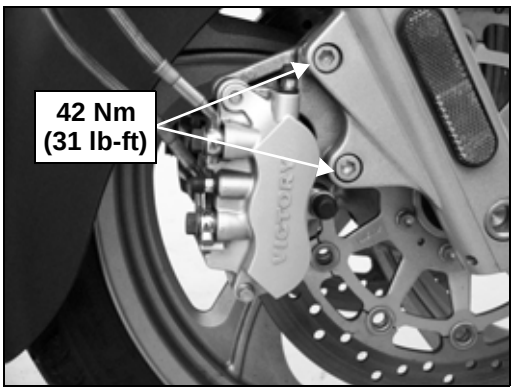

© 2009 Polaris Sales Inc.

11. Install new brake pads with friction material toward disc. Be sure pads are fully seated in pad retainer.
12. Apply Silicone Grease (009-Z00-111) to O-ring on brake pad retaining pin.
13. Insert pin through caliper and slide pin through the outer pad followed by the inner pad. Torque retaining pin to **13.5 Nm (120 lb-in)**.

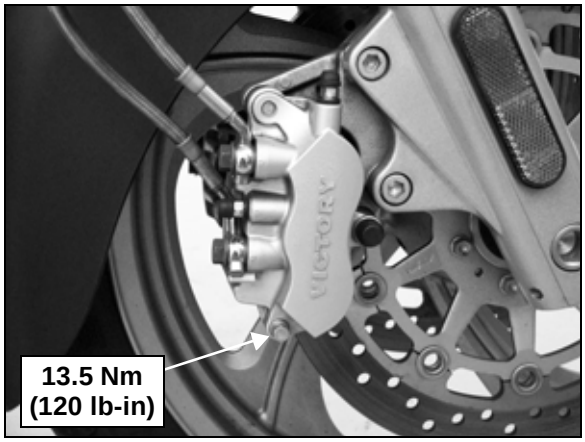

14. Inspect brake fluid in reservoir and set to proper level (page 15.14).
15. Slowly pump lever to set brake pads against disc. Lever should be firm, not spongy. If lever is spongy, inspect pad installation, bleed brake lines (page 15.14) and inspect brake disc (see page 15.20).
16. Install reservoir cover. Torque screws to **1.6 Nm (14 lb-in).**
17. Operate brake lever several times until lever is firm and pressure can be felt.

⚠ WARNING

After pad installation or any brake system repair, safely elevate wheel, apply and release brake pedal or lever 2-3 times and release. Verify wheel turns freely without drag. If brake drag is evident, do not operate the motorcycle. Inspect vehicle to determine cause and then repair as necessary.

REAR BRAKE PAD REPLACEMENT

NOTE: Always replace brake pads as a set. The rear brake pads can be changed with the caliper installed on the motorcycle. Refer to page 2.15 for rear pad inspection.

IMPORTANT: Do not attempt to remove the caliper from the bracket with bracket installed.

1. Push caliper toward wheel to push pad and pistons back and provide clearance for new pad installation.

NOTE: Brake fluid will be forced back into the reservoir when pads are pushed back. Remove reservoir cover and monitor fluid level, or attach a hose to the brake bleeder screw (as described in Brake Bleeding on page 15.14) and open the bleed screw while pushing the pads and pistons back.

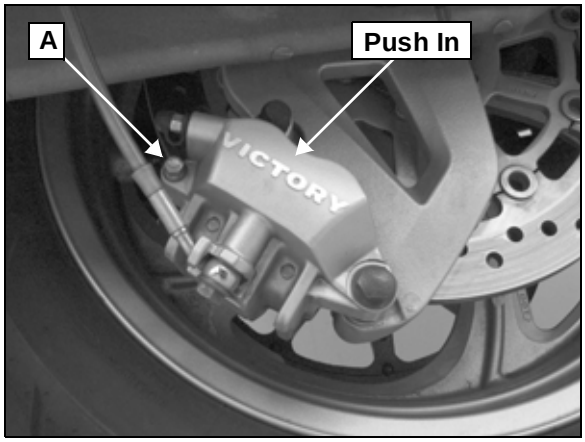

NOTE: The caliper should move freely on guide pins.

2. Loosen the retaining pin (A).
3. Slide the retaining pin out to allow the brake pads to be removed.

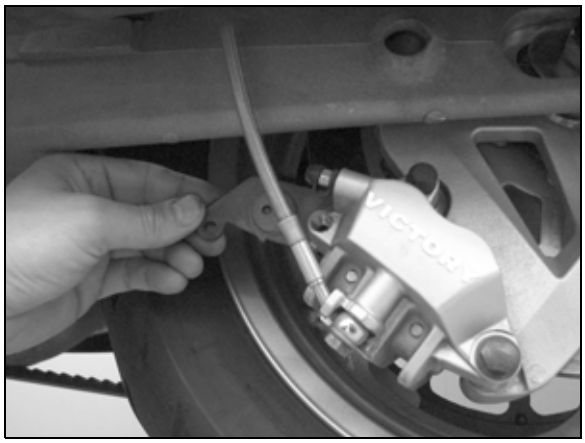

© 2009 Polaris Sales Inc.

4. Note orientation of spring plate and pad retainer. Replace both parts with new.

5. Wipe brake disc clean with a shop towel sprayed with Victory Brake Cleaner.

6. Thoroughly clean the brake caliper body with Victory Brake Cleaner.

7. Install new inner brake pad. Be sure backing plate (C) (with insulation pad) is properly installed on new pad. Slide pad into place and engage tab (E) in the pad retainer in the back of the caliper.

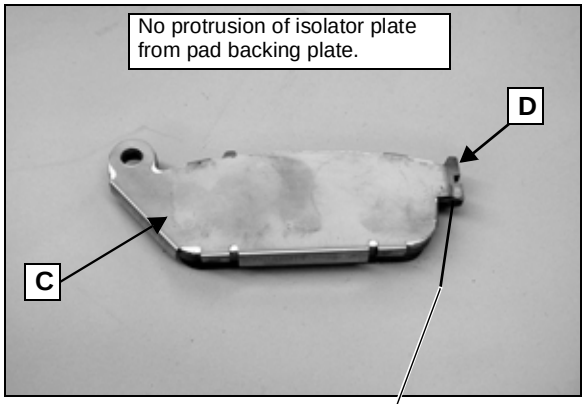

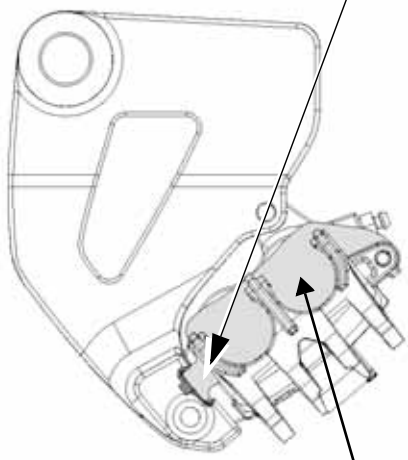

8. Install new outer brake pad. Be sure tab is engaged with caliper as for inner pad (see Step 7).

9. Apply Silicone Grease (009-Z00-111) to O-ring on pad retaining pin. Install the pin and torque to **13.5 Nm (120 lb-in).**

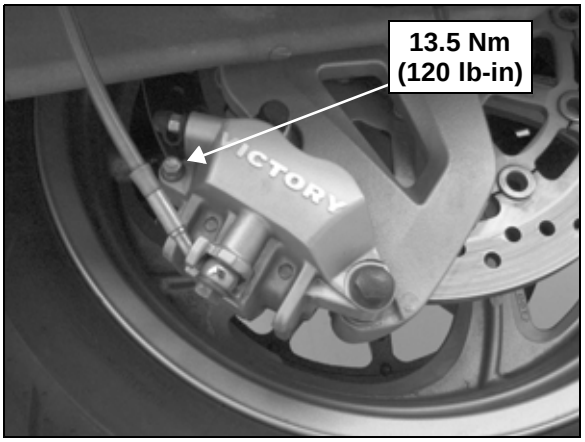

10. Inspect fluid level in the reservoir and adjust as necessary (page 15.13).

11. Pump brake pedal slowly several times to set new pads against disc, until lever is firm and pressure can be felt.

12. Bleed brake system if necessary (page 15.14).

WARNING

After pad installation or any brake system repair, safely elevate wheel, apply and release brake pedal or lever 2-3 times and release. Verify wheel turns freely without drag. If rear brake drag is evident, inspect pedal clearance as outlined on page 15.28. Do not operate the motorcycle if drag is still evident after clearance adjustment. Inspect vehicle to determine cause and repair as necessary.

© 2009 Polaris Sales Inc.

BRAKE DISC INSPECTION

1. Visually inspect disc for cracks or damage.
2. Measure brake disc thickness in several locations around disc with a micrometer, and along *wear surface* and compare to specifications found on page 15.3.

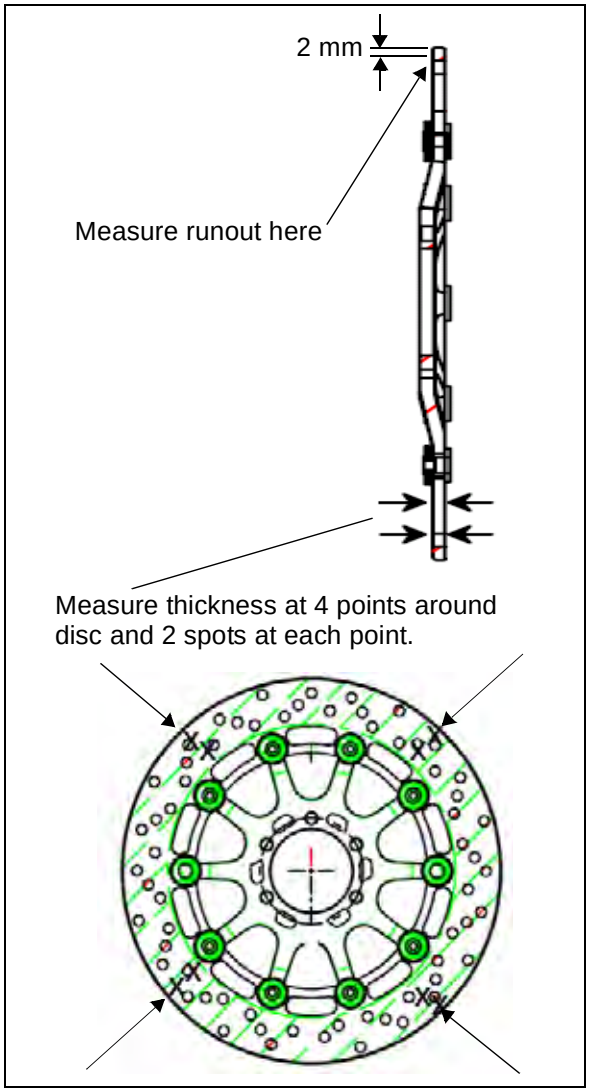

NOTE: Replace the brake disc if any measurement is worn beyond the service limit.

3. With disc mounted to wheel, inspect for brake disc runout / warpage with and compare to specifications found on page 15.3. Runout should be measured 2 - 4 mm in from outside edge of disc.
4. If runout is excessive, refer to Troubleshooting at the end of this Chapter. Replace brake disc if dial indicator reading displays excessive brake disc runout and other possible causes have been eliminated.
5. Refer to Chapter 12 for front brake disc removal and installation. Refer to Chapter 13 for rear brake disc removal & installation.

FRONT BRAKE MASTER CYLINDER / CLUTCH MASTER CYLINDER SERVICE

NOTICE: Brake fluid and brake cleaners could damage paint, plastics and some rubber compounds. Cover or remove plastic and painted parts before working on the brake system. If brake fluid is spilled on cosmetic surfaces, immediately rinse the area with a mild solution of soap and water until all traces of brake fluid are removed. Make sure the master cylinder reservoir being worked on is level before removing the cap.

IMPORTANT: Replace all rubber parts upon assembly.

NOTE: Procedure is the same for the clutch master cylinder. Refer to Chapter 9 for specifications.

1. On ABS models, disconnect the negative (-) battery cable from battery. Clean the master cylinder. Drain brake fluid from the *top bleed screw* on both front calipers by attaching a drain hose to each caliper bleed screw and place the end in a suitable container. Drain brake fluid from the front brake system by slowly pumping the brake lever.

NOTE: DO NOT drain brake fluid from the side bleed screws on the front caliper. Fluid in that portion of the caliper is controlled by the foot pedal brake, and does not need to be removed when servicing the front master cylinder.

2. Disconnect front brake light switch wires at switch (B).
3. Remove switch (C) and brake lever nut (D), brake lever pivot screw, lever and bushing.
4. Remove brake line from master cylinder (E).
5. Remove screws (F), clamp, and master cylinder.

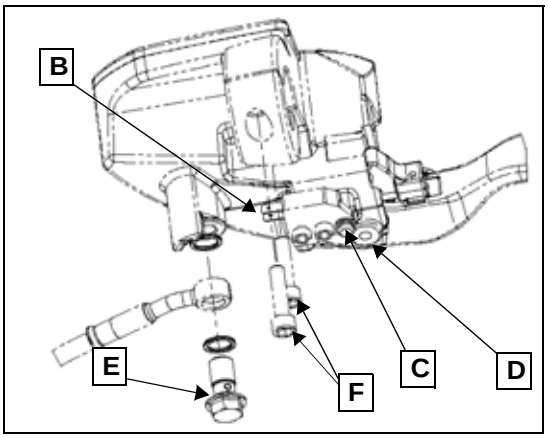

6. Remove reservoir cover and diaphragm.

© 2009 Polaris Sales Inc.

7. Pull dust boot off piston and out of cylinder bore.
8. Remove snap ring.

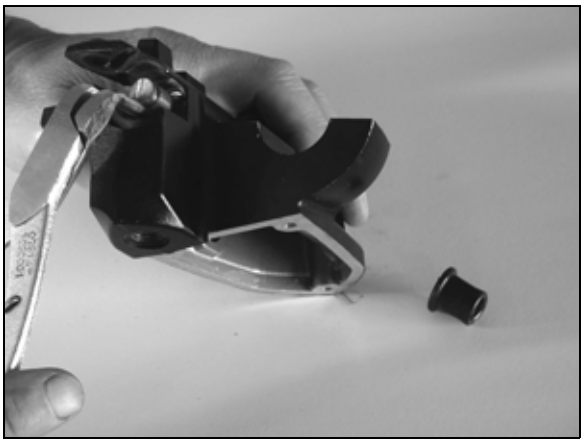

9. Slide piston out with spring. Note spring orientation for assembly of new spring (new parts).

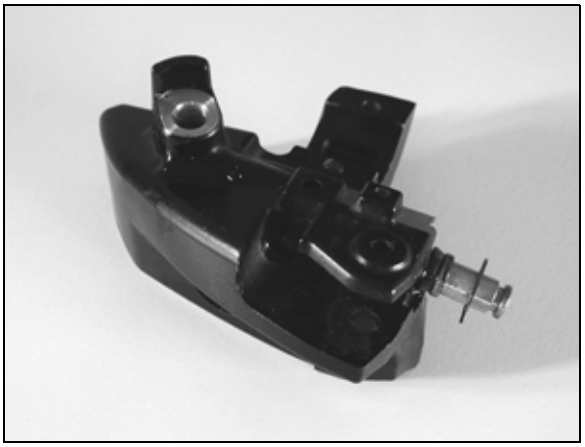

10. Clean master cylinder with isopropyl alcohol and dry with compressed air. DO NOT soak in alcohol for more than 30 seconds. DO NOT aim pressurized air directly at the level sight glass.
11. Inspect bore (G) and chamfer of bore (H) for corrosion, scratches, scoring, or pitting. Replace master cylinder if any of these conditions are evident.

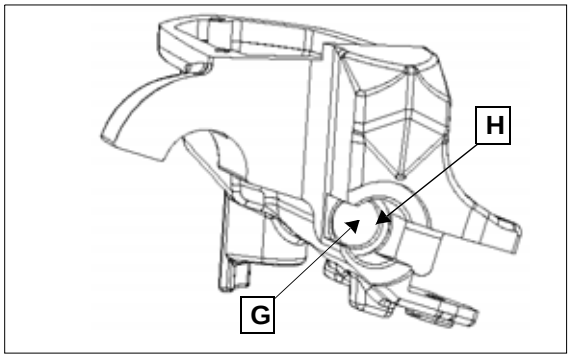

12. Measure the diameter of the bore. Replace master cylinder if worn beyond the service limit.

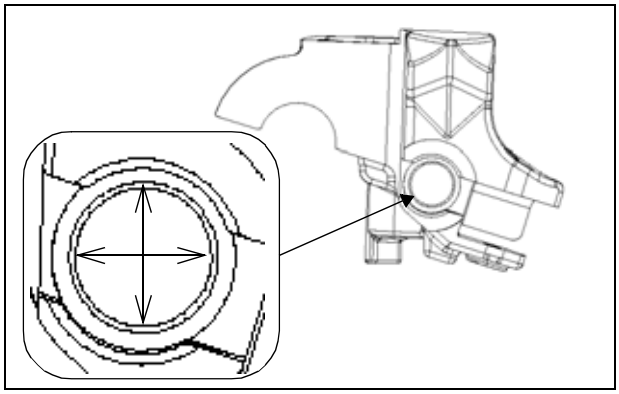

Brake Master Cylinder - Bore Diameter

Service Limit: 14.043 mm (.553”)

Clutch Master Cylinder - Bore Diameter

Service Limit: 12.743 mm (.502”)

13. Measure the diameter of the master cylinder piston in two places as shown below. Replace piston if worn beyond the Service Limit.

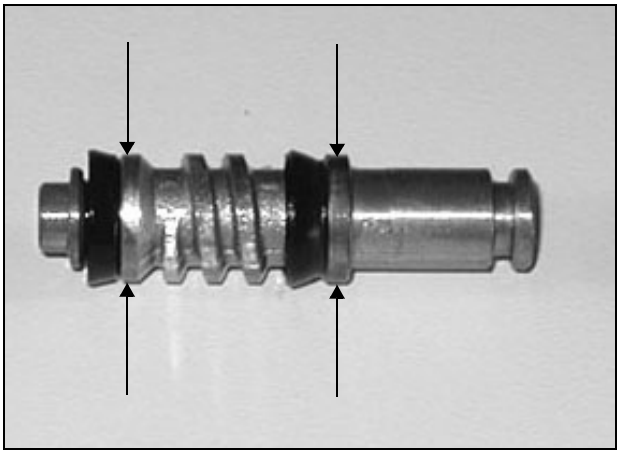

Brake Master Cylinder - Piston Diameter

Service Limit: 13.85 mm (.545”)

Clutch Master Cylinder - Piston Diameter

Service Limit: 12.55 mm (.494”)

© 2009 Polaris Sales Inc.

14. Remove deflector (A) from reservoir.

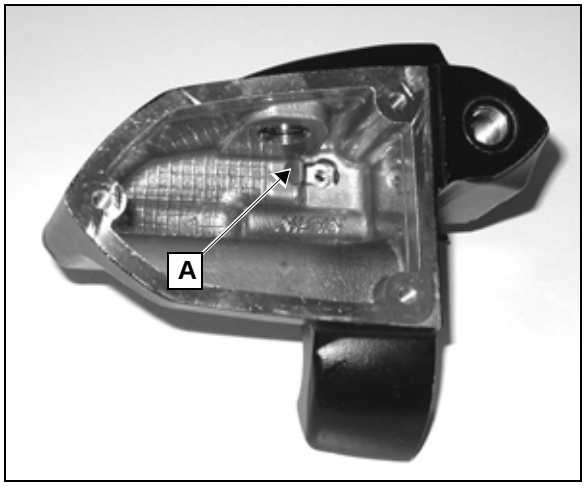

15. Clean the compensating port (B) and supply port (C) with compressed air to be sure they are clean and unobstructed. Re-install the deflector.

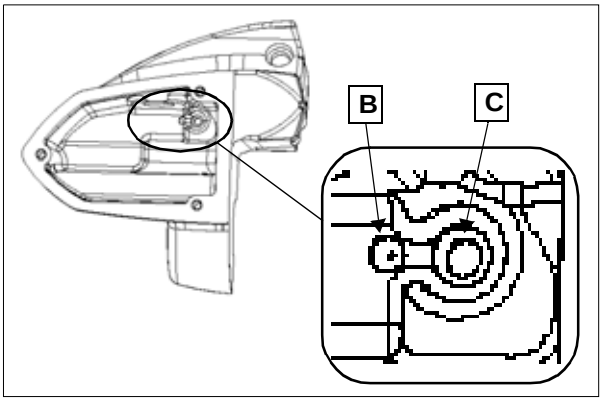

16. Apply a light film of special lubricant from piston kit to each piston seal cup.

17. Assemble spring to new piston assembly as shown with small end to piston. Large diameter of beveled edge on piston seals (D) face toward spring. Install a new retaining ring on end of piston with machined edge (sharpest of the two edges) facing out (E).

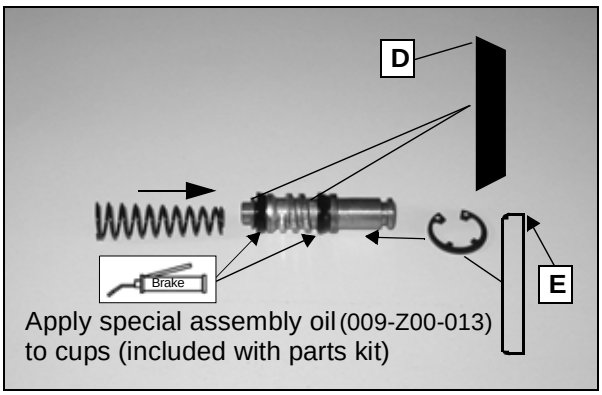

18. Carefully install spring / piston assembly into master cylinder bore. Work the front piston seal carefully past the chamfer and into bore. Use care not to damage or fold the seal when working it past the chamfer.

19. Continue to install the piston until the rear seal is past the chamfer. Push and hold the piston in far enough to allow the retaining ring to be installed.

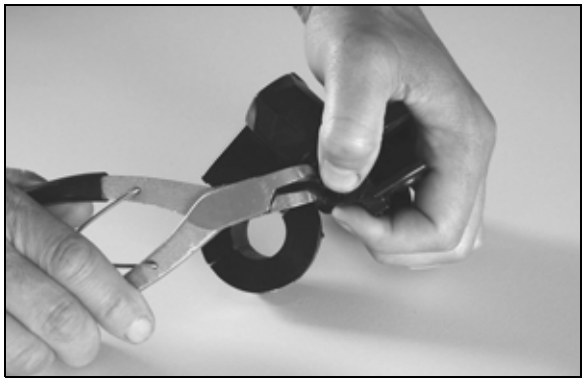

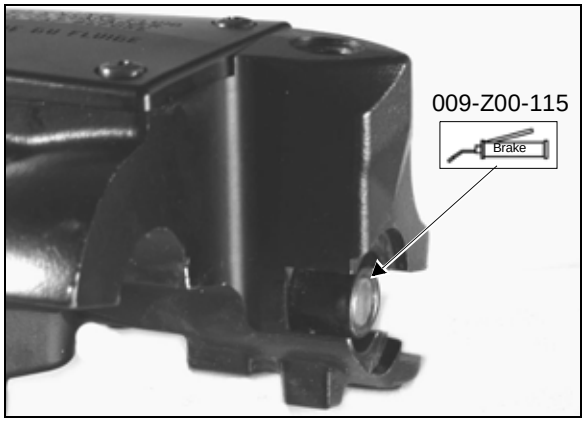

20. Be sure retaining ring is fully seated in the groove.

21. Clean the bore from the retaining ring outward, so the outer edge of the new dust boot adheres properly and will not dislodge from the bore.

22. Install new boot, seating the outer edge fully in the bore and engage outer lip of boot in piston groove.

23. Apply special grease (009-Z00-115) from kit to brake lever contact surface.

24. Install master cylinder on handlebar. See page 15.23.

© 2009 Polaris Sales Inc.

FRONT MASTER CYLINDER INSTALLATION

1. Clean the mounting surface on the handlebar.

2. Loosely install master cylinder, clamp, and screws. Rotate clamp on handlebar until parting line (A) of clamp is aligned with parting line (B) of handlebar control block.

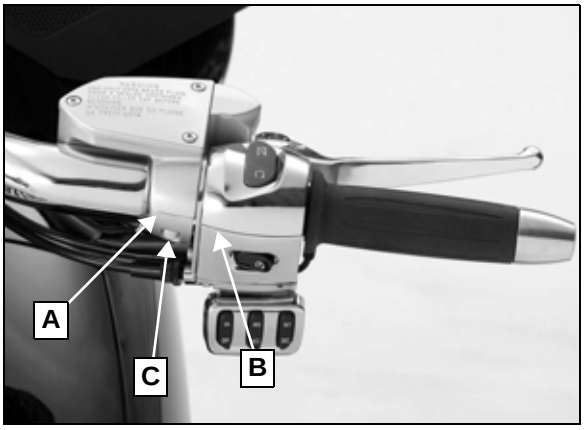

3. **Torque rear clamp screw (C) first then torque front screw to 11 Nm (96 lb-in).**

4. Connect brake hose to master cylinder with banjo bolt (D) and new sealing washers. **Torque banjo bolt (D) to 24.4 Nm (18 lb-ft).**

5. Install brake light switch (E). **Torque screws to 1.2 Nm (11 lb-in).** Connect switch wires (F).

6. Lubricate brake lever bushing with special lubricant from kit and install lever. **Torque pivot screw to 1.0 Nm (9 lb-in). Hold screw and torque nut (G) to 6 Nm (52 lb-in).**

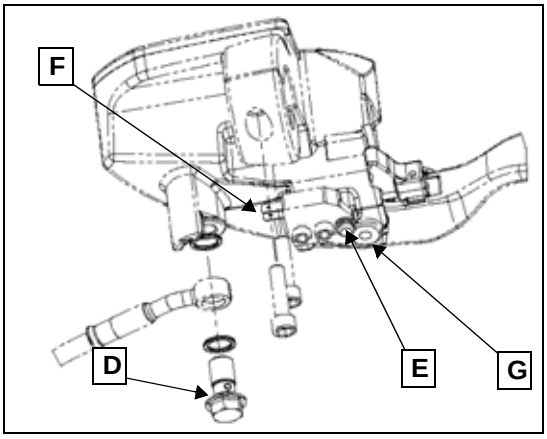

7. Turn handlebars until top of reservoir is level. Fill reservoir with Victory DOT 4 Brake Fluid and bleed the front hydraulic brake system (see page 15.14).

8. Re-connect negative battery cable on ABS models.

WARNING

After pad installation or any brake system repair, safely elevate the wheel, apply and release the brake pedal or lever 2-3 times and release. Verify the wheel turns freely without drag. If brake drag is evident, do not operate the motorcycle. Inspect the vehicle to determine the cause and then repair as necessary.

FRONT CALIPER REMOVAL

NOTICE: Brake fluid and brake cleaners will damage paint, plastics and some rubber compounds. Cover or remove plastic and painted parts before working on the brake system. If brake fluid is spilled on cosmetic surfaces, immediately rinse the area with a mild solution of soap and water until all traces of brake fluid are removed. Make sure the master cylinder reservoir is level before removing the cap.

IMPORTANT: Replace all rubber parts upon assembly.

1. On ABS models, disconnect the negative (-) battery cable from battery.

2. Remove banjo bolts (A), sealing washers, and brake lines from caliper body and allow it to drain into a suitable container.

3. Loosen the pad retaining pin (B) prior to removing the caliper to allow brake pad removal.

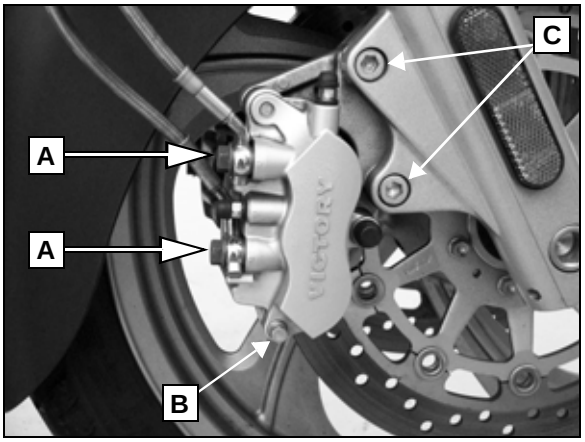

4. Remove front caliper mounting bolts (C) and remove the caliper.

5. Cover brake line ends to prevent debris from entering.

6. If servicing both front calipers, repeat this procedure to remove the other front caliper.

© 2009 Polaris Sales Inc.

FRONT CALIPER SERVICE

1. Cover the brake hose connection on the caliper and clean the outer surfaces of caliper assembly with Victory brake cleaner or isopropyl alcohol. Dry with compressed air.
2. Remove brake pads. **Pads contaminated with oil or grease must be replaced as a set.**

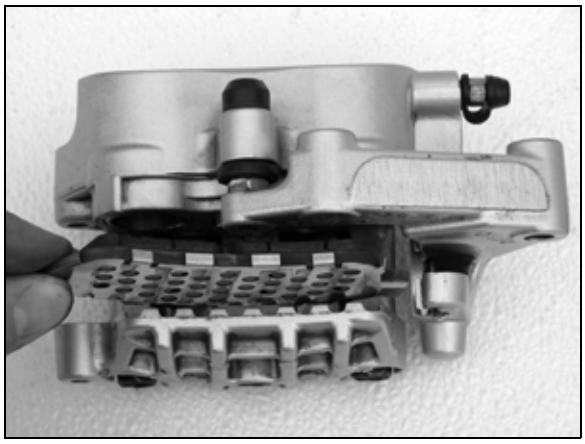

3. Remove the (3) caliper body bolts (A) and remove the caliper guide pin bracket (B).

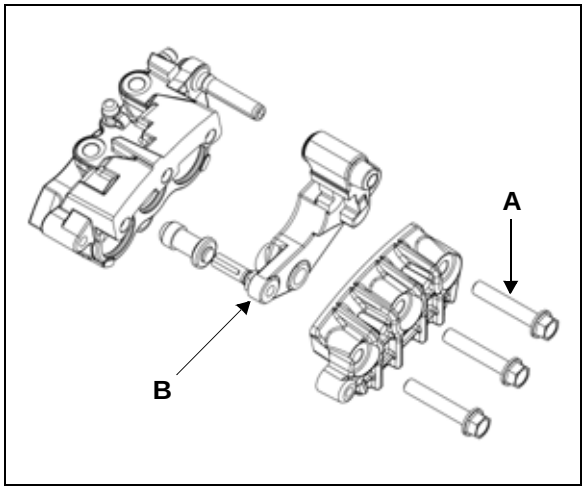

4. Keep parts in order for assembly in the same bore.
5. Remove each piston with a caliper piston pliers. If a caliper piston pliers is not available, wrap the caliper in a shop towel and apply short bursts of compressed air through the brake line hole and through the transfer passage to force the pistons out of the bore.

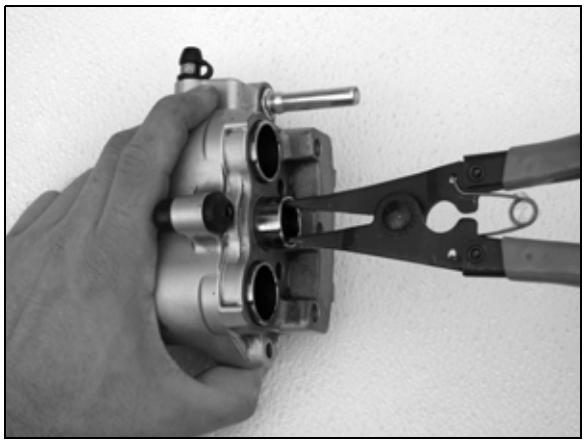

6. Remove dust seals and piston seals. Use care not to damage the seal bores.

7. Clean all parts thoroughly with isopropyl alcohol. Be sure the seal bores are clean, removing all traces of dirt or dried brake fluid.

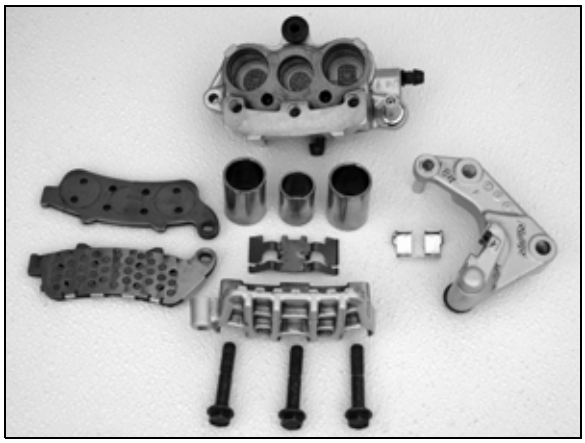

© 2009 Polaris Sales Inc.

8. Clean piston seal and dust seal bores (C) to remove residue that could cause the pistons to stick, resulting in brake drag.

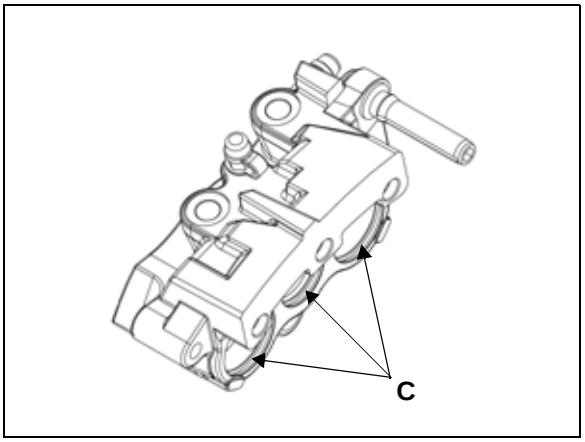

9. Inspect each piston bore for corrosion, scratches, scoring, or pitting. Replace caliper if any of these conditions are evident.
10. Measure the diameter of each piston bore. Replace caliper if any is worn beyond the service limit.

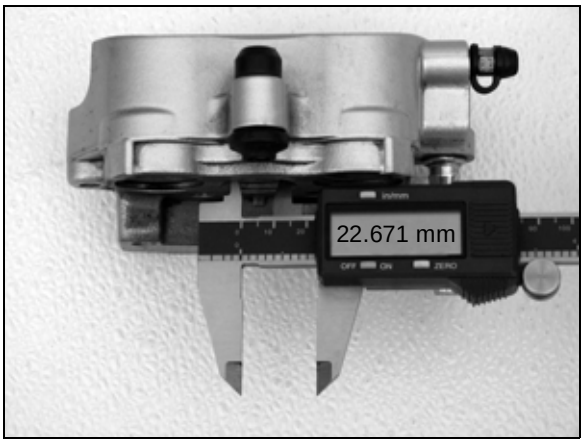

Front Brake Caliper - Bore Diameter

Outer Piston Bores
Service Limit: 27.05 mm (1.065”)

Middle Piston Bore
Service Limit: 22.7 mm (.894”)

11. Measure the outside diameter of each caliper piston in two spots 90 degrees apart, 5mm from outer edge. Repeat the measurements 5mm from the inner edge. Replace piston if worn beyond the service limit at any measuring point.

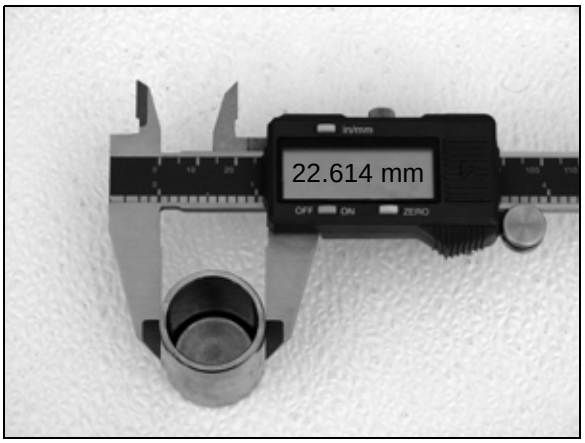

Front Brake Caliper - Piston Diameter

Outer Pistons
Service Limit: 26.935 mm (1.060”)

Middle Piston
Service Limit: 22.585 mm (.889”)

IMPORTANT: Install all new rubber parts during assembly. Do not reuse old seals or boots.

12. Apply Silicone Grease (009-Z00-111) from service kit to new piston seals and dust seals (see page 15.10).
13. Apply CCI Oil (009-Z00-313) from service kit to outer surface of all pistons (see page 15.10).
14. Install piston seals and dust seals in caliper body.

© 2009 Polaris Sales Inc.

15. Install pistons in their respective bores.

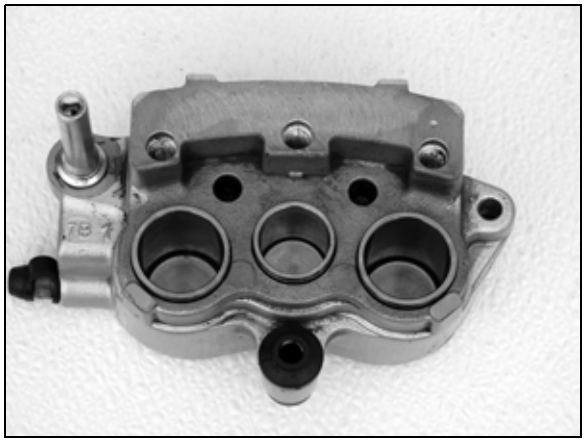

16. Install the spring plate to the outer portion of the caliper body as shown.

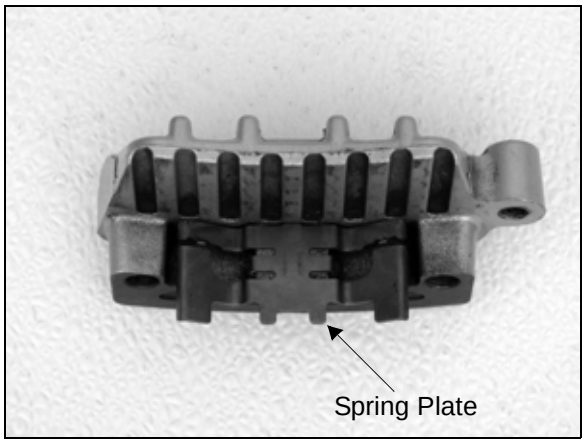

17. Clean the threads of each caliper body bolt. Be sure threads are free from any oil, grease, or brake fluid. Apply a few drops of Loctite 242 (Blue) non permanent locking agent to the threads of each bolt.

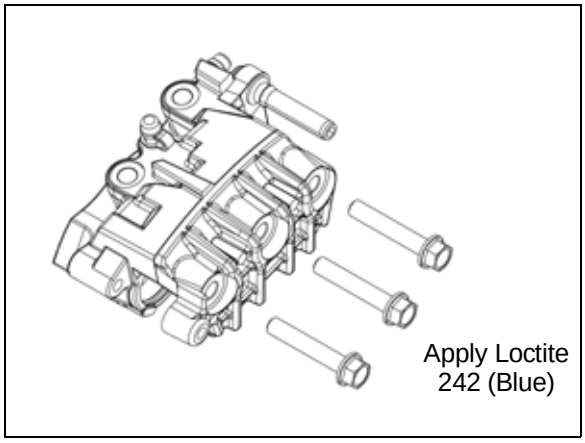

18. Evenly tighten the bolts by hand until halves are secured together.

19. **Torque bolts to 27 Nm (20 lb-ft).**

20. Install the brake pad retainer onto the caliper guide pin bracket as shown.

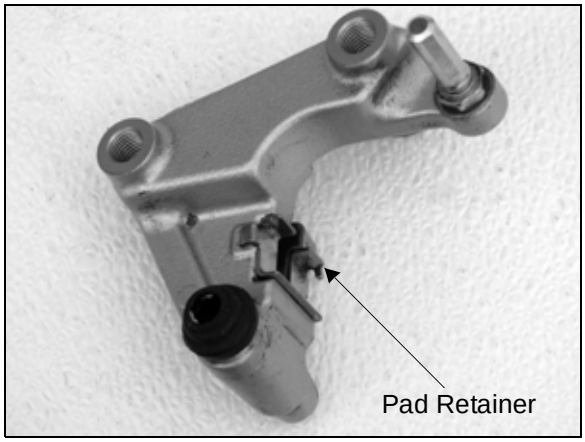

21. Apply Special Grease (009-Z00-115) to the boots and guide pins, then install the caliper guide pin bracket.

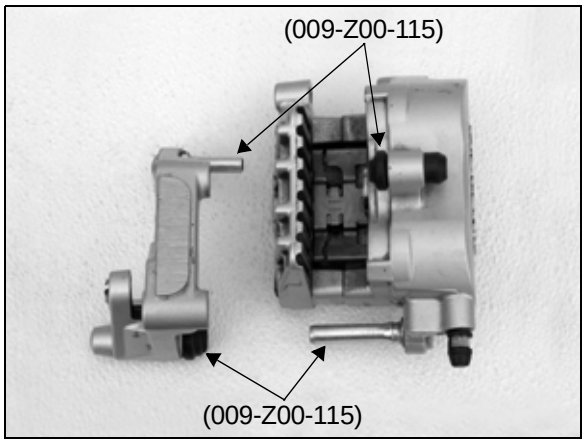

22. Install brake pads.

23. Apply Silicone Grease (009-Z00-111) to O-ring on brake pad retaining pin and install the pin.

© 2009 Polaris Sales Inc.

FRONT CALIPER INSTALLATION

1. Connect brake lines to caliper with banjo bolts and new sealing washers.

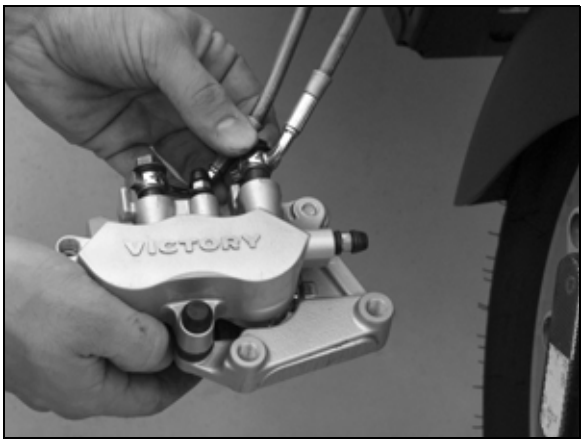

2. Clean mounting surfaces of caliper and fork leg.
3. Apply Victory brake cleaner or isopropyl alcohol to a clean shop towel and wipe brake disc(s) clean.
4. Separate brake pads and install caliper assembly over brake disc.
5. Install caliper mounting bolts. **Torque to 42 Nm (31 lb-ft)**.

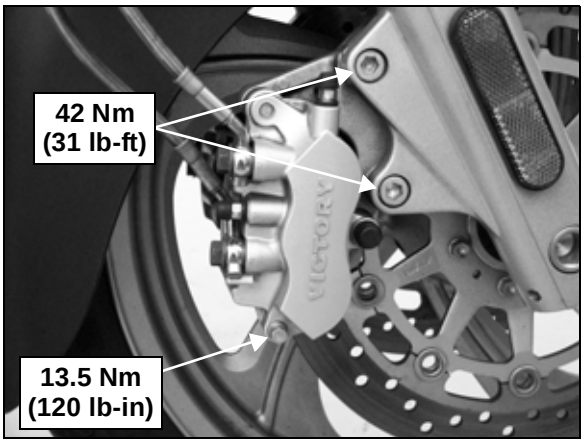

6. Torque brake pad retaining pin to **13.5 Nm (120 lb-in).**
7. Torque brake line banjo bolts to **24.4 Nm (18 lb-ft)**.

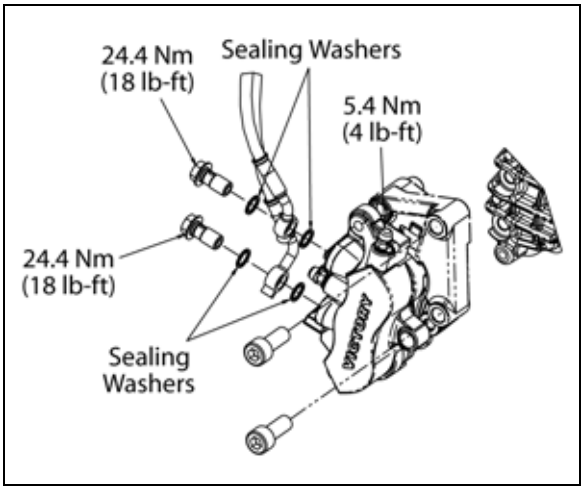

8. Fill and bleed the front brake hydraulic system (page 15.14).

WARNING

After pad installation or any brake system repair, safely elevate the wheel, apply and release the brake pedal or lever 2-3 times and release. Verify the wheel turns freely without drag. If brake drag is evident, do not operate the motorcycle. Inspect the vehicle to determine the cause and then repair as necessary

© 2009 Polaris Sales Inc.

REAR MASTER CYLINDER REMOVAL

NOTICE: Brake fluid and brake cleaners will damage paint, plastics and some rubber compounds. Cover or remove plastic and painted parts before working on the brake system. If brake fluid is spilled on cosmetic surfaces, immediately rinse the area with a mild solution of soap and water until all traces of brake fluid are removed. Make sure the master cylinder reservoir being worked on is level before removing the cap.

1. Remove clamp for reservoir hose at master cylinder (A) and disconnect fluid supply hose. Allow fluid to drain into a container.
2. Remove brake line banjo bolt (B), sealing washers and brake line.
3. Remove retaining clip (C) from pushrod pin (D) and remove pin from clevis.

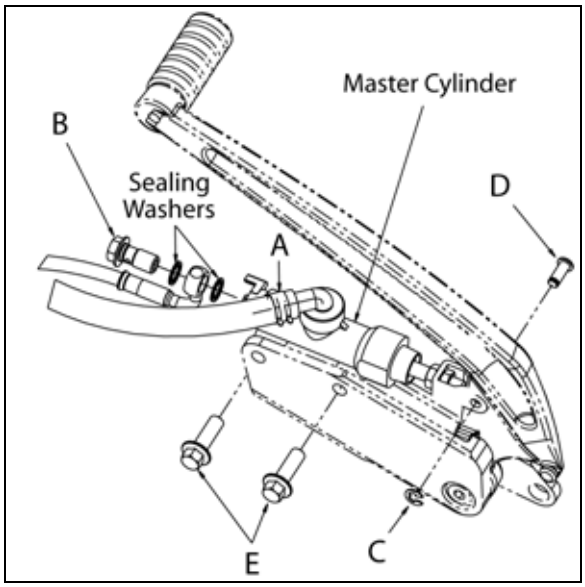

4. Remove master cylinder from floorboard support by removing the two mounting screws (E).

REAR MASTER CYLINDER INSTALLATION

1. Install master cylinder on floorboard support, engaging clevis with brake pedal.
2. Apply a light film of grease to clevis pin and install from outside to inside. Install a new retaining ring on pin.
3. Attach fluid supply hose to master cylinder supply fitting using a new clamp.
4. Install the master cylinder mounting screws and torque to **24.4 Nm (18 lb-ft)**.
5. Install the brake line with new sealing washers and torque banjo bolt to **24.4 Nm (18 lb-ft)**.

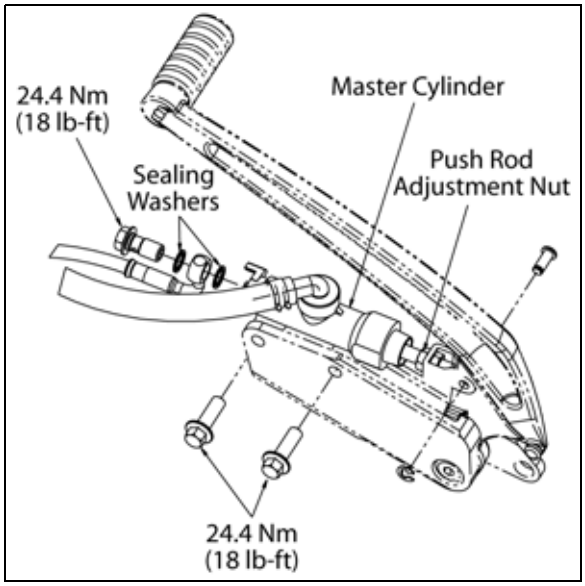

6. Verify the pushrod length adjustment. There must be 1 - 2 mm (.04 - .08″) clearance between the brake pedal casting and the pedal stop when the pedal is in the fully released position and master cylinder piston is against its internal stop.

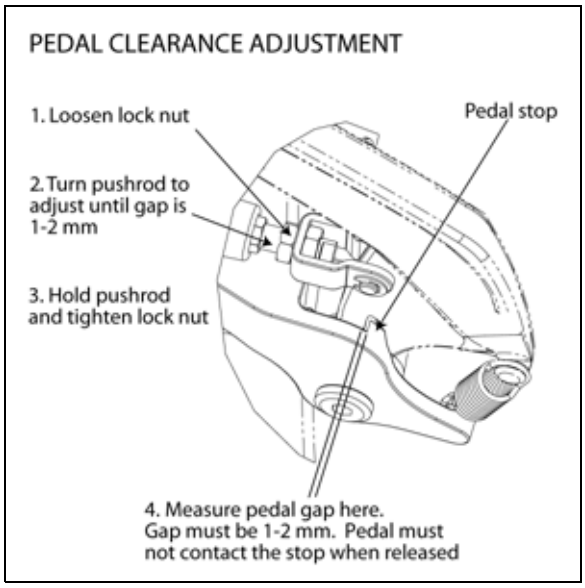

© 2009 Polaris Sales Inc.

7. Re-adjust pushrod length to provide specified clearance if necessary.

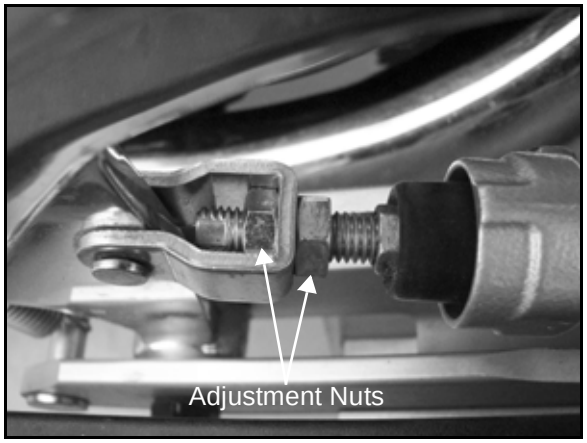

8. Fill the reservoir with Victory DOT 4 brake fluid and bleed the system as outlined on page 15.13.

WARNING

After pad installation or any brake system repair, safely elevate the wheel, apply and release the brake pedal or lever 2-3 times and release. Verify the wheel turns freely without drag. If brake drag is evident, do not operate the motorcycle. Inspect the vehicle to determine the cause and then repair as necessary.

REAR CALIPER SERVICE

1. On ABS models, disconnect the negative (-) battery cable from battery.
2. Remove banjo bolt and sealing washers from rear caliper and allow fluid to drain into a container.
3. Loosen the brake pad retaining pin (A).

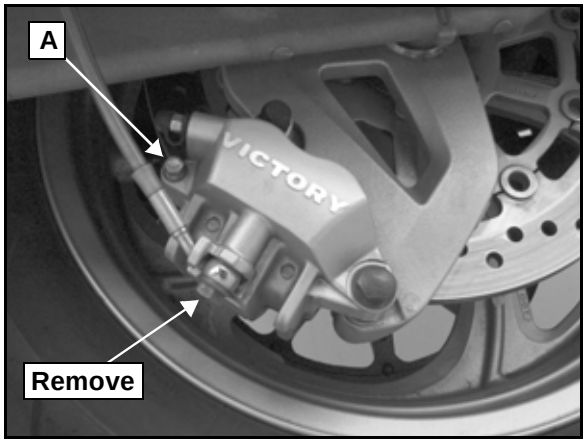

4. Remove rear wheel (Chapter 13). Caliper and bracket must be removed as an assembly.
5. Remove pin (A) and brake pads. Note orientation of spring plate (B) for assembly.

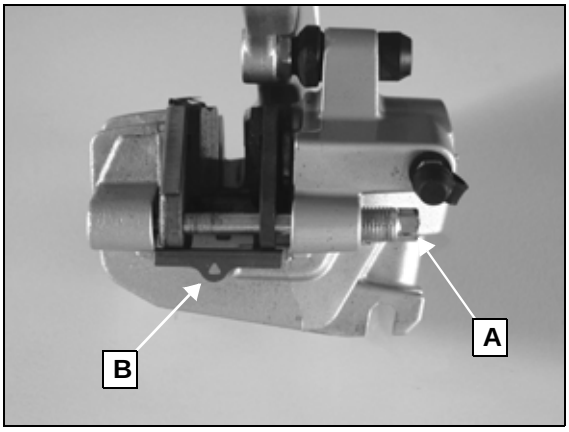

6. Slide caliper bracket off pins and remove spring plate.

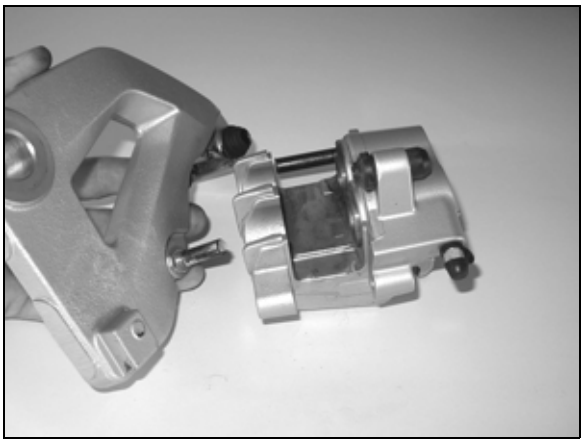

7. Remove caliper pistons. Keep pistons in order for installation in their respective bores.

8. Remove dust seals and piston seals. Use care not to damage the seal bores.

© 2009 Polaris Sales Inc.

9. Clean caliper thoroughly with isopropyl alcohol. Dry with compressed air. Clean seal grooves thoroughly. Any residue left behind in the grooves could cause caliper pistons to stick and result in brake drag.

10. Inspect each bore and surface of each piston for corrosion, scratches, scoring, or pitting. Replace caliper assembly if any of these conditions are evident.

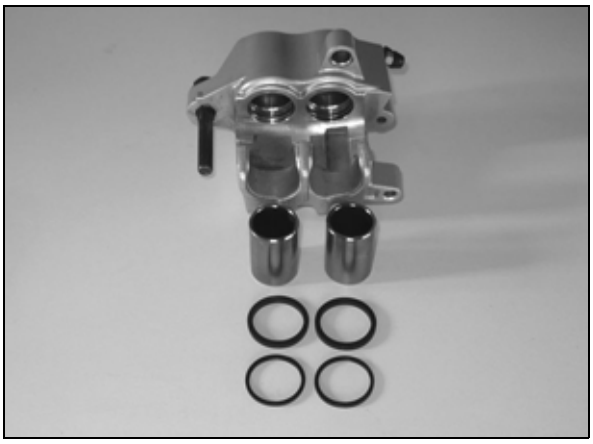

11. Measure diameter of each bore and piston. Replace caliper assembly or parts if worn beyond service limit.

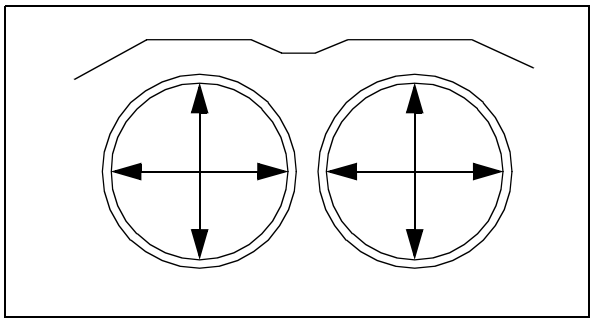

Rear Brake Caliper - Bore Diameter
Service Limit: 27.05 mm (1.065”)

Rear Brake Caliper - Piston Diameter
Service Limit: 26.935 mm (1.060”)

12. Install all new rubber parts during assembly. Do not reuse old seals or boots. Apply special lubricant from service kit to new piston seals and dust seals.

13. Apply special assembly oil to outer surface of all pistons.

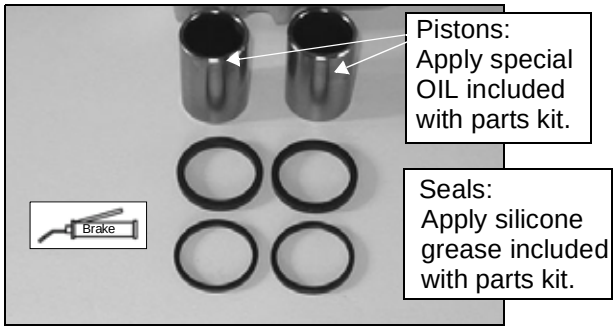

14. Install piston seals and dust seals in caliper body.

15. Install pistons in their respective bore.

16. Replace caliper pin boot (C) on bracket and (D) on caliper. Apply special grease (009-Z00-115) from service kit to boots and both pins. Clean excess grease from outside of boots.

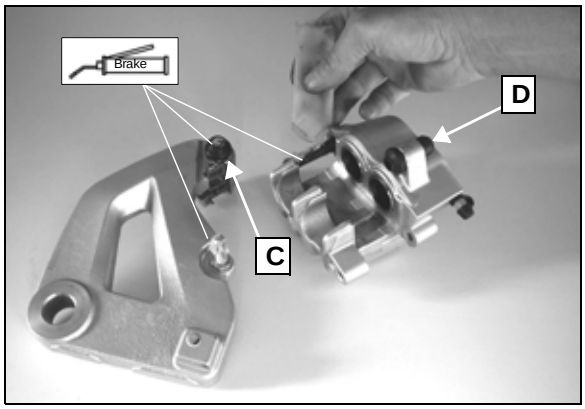

17. Be sure brake pad guide plate is in place on bracket with arrow (E) pointed up.

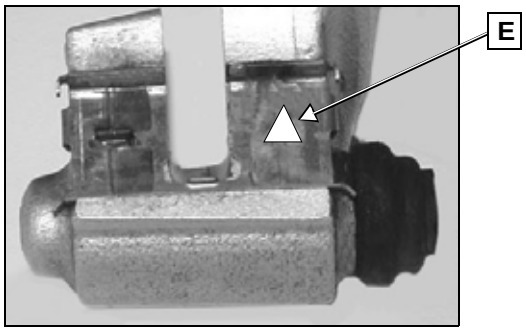

18. Assemble bracket to caliper. Remove excess lubricant.

19. Install spring plate and outer brake pad. Start pad pin through outer pad.

© 2009 Polaris Sales Inc.

20. Install inner pad with backing plate.

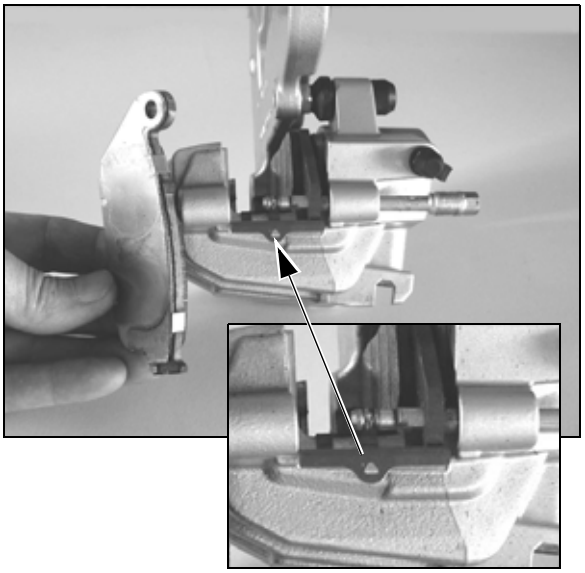

21. Torque brake pad pin to **17 Nm (12.5 lb-ft)**.

22. Be sure end tabs of pads are both fully engaged in the heel plate (F) on bracket.

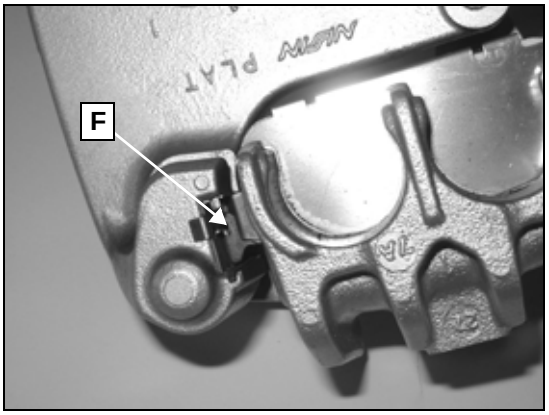

REAR CALIPER INSTALLATION

1. Install caliper and bracket (see “REAR WHEEL INSTALLATION” on page 13.15).

2. Install brake hose, and banjo bolt with new sealing washers.

3. **Torque banjo bolt to 24.4 Nm (18 lb-ft.)**

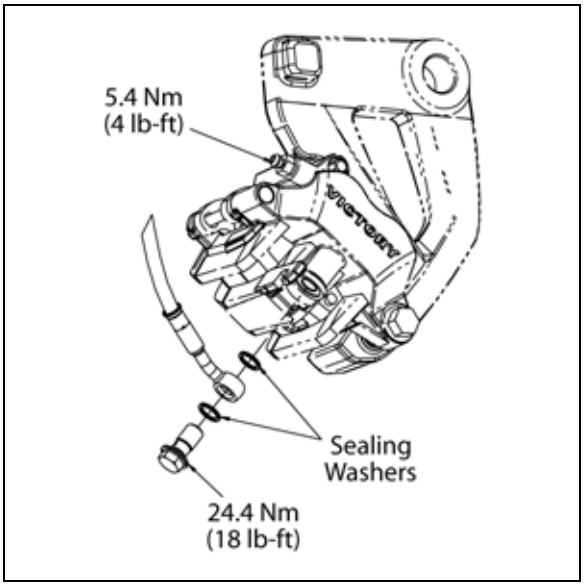

4. Fill and bleed rear hydraulic brake system. Refer to page 15.13.

5. Re-connect negative (-) battery cable on ABS models.

WARNING

After pad installation or any brake system repair, safely elevate the wheel, apply and release the brake pedal or lever 2-3 times and release. Verify the wheel turns freely without drag. If brake drag is evident, do not operate the motorcycle. Inspect the vehicle to determine the cause and then repair as necessary.

© 2009 Polaris Sales Inc.

ANTI-LOCK BRAKE SYSTEM (ABS)

ABS SYSTEM SAFETY PRECAUTIONS

Before working on a Victory motorcycle equipped with anti-lock brakes, review and understand all general brake system and brake fluid precautions on page 15.2, and the following ABS specific precautions and system information. Do not attempt maintenance or repair of the anti-lock brake system without the proper tools. Refer to non-ABS component information in this chapter for master cylinder and caliper removal, disassembly, and assembly.

Troubleshooting specific to ABS is on page 15.48.

WARNING

Proper brake system bleeding is extremely important to ensure adequate lever reserve in the system. Always perform the Brake Lever Reserve test described in this manual after bleeding the anti-lock brake system.

- Operating with non-recommended tires or improper tire pressure may reduce the effectiveness of the anti-lock brake system.
- Always install the recommended size and type of tires specified for the vehicle.
- Always maintain the recommended tire pressure.
- Victory DOT 4 Brake Fluid is recommended. Change every 2 years or more often if contaminated.
- The anti-lock brake system will not prevent wheel lock-up, loss of traction, or loss of control *under all conditions*. Always adhere to all safe motorcycle-riding practices as recommended.
- It is not unusual to leave tire marks on the road surface during a hard braking event.
- The anti-lock braking system does not compensate for or reduce the risk associated with:
  - *excessive speed*
  - *reduced traction on rough, uneven or loose surfaces*
  - *poor judgement*
  - *improper operation*

ABS GENERAL INFORMATION

The Anti-Lock Brake System is a safety feature designed to prevent wheel lock-up and improve control of the motorcycle during extreme braking events, including:

- Panic braking
- Slick surface braking (such as wet road surfaces)
- Surface transitions (from asphalt to oily asphalt or cobblestone, etc.)

Here are a few general points to note about ABS:

- The anti-lock brake system cannot be turned OFF.
- The ABS indicator lamp (located on the Instrument Cluster) always illuminates when the key is in the ON position and remains on until the anti-lock system activates, which occurs when vehicle speed exceeds 6 mph (10 kph).
- If the lamp is not illuminated when the key is ON, connect Digital Wrench and perform an ABS System inspection to determine the cause.
- When the ABS lamp is illuminated, the anti-lock brakes will not activate, but the conventional brake system will continue to operate normally.
- If the lamp continues to illuminate after the vehicle speed exceeds 6 mph (10 kph), the system is not functioning. Connect Digital Wrench and perform an ABS System inspection to determine the cause.
- When the anti-lock brakes engage during a braking event, the rider will feel pulsing at the brake lever or pedal. *Continue to apply steady pressure to the brakes for the best stopping performance*.
- The ABS system is not adjustable. The wheel speed sensor-to-pulse ring air gap is fixed. Air gap will not change unless a sensor or pulse ring is loose, damaged, worn, or has debris attached.
- The ABS system is not re-programmable.
- The ABS light is controlled by the ECM via CAN BUS.
- Diagnostic codes are unique to ABS and can only be viewed with Digital Wrench. ABS Trouble Codes will not appear on the Instrument Cluster display as an SPN / FMI code.
- Wheel speed sensors are used only for ABS. The Vehicle Speed Sensor is used for vehicle speed.
- If fuse is open or removed, ABS light will remain ON after 6 mph (10 kph). ABS will not be active. Normal (conventional) braking will be available provided the system components (master cylinder, lines, calipers, etc.) are in working order.

© 2009 Polaris Sales Inc.

ABS SYSTEM COMPONENTS

The following parts *function* in the same manner as the same component in a non-ABS system, although parts are not necessarily interchangeable. Always refer to the appropriate ABS parts information when replacing a component or component parts. Refer to the non-ABS portion of this chapter for removal, installation, operational overview, and repair of these components. Refer to page 15.34 for ABS System Component Diagram.

- Front Brake Caliper
- Rear Brake Caliper
- Front Master Cylinder
- Rear / Linked Master Cylinder
- Delay Valve
- Proportion Valve
- Brake Light Switch
- Brake Lines

In addition to the brake system components listed above, the following are used on ABS equipped vehicles:

- Wheel Speed Sensors (Front located on front left fork leg; Rear mounted on rear caliper bracket)
- Wheel Speed Sensor Pulse Rings (Front and Rear mounted to wheel with 3 disc bolts)
- ABS Module Assembly
- ABS Related Wiring

ABS OVERVIEW OF OPERATION

The ABS system is active and available when vehicle speed exceeds 6 mph (10 kph).

The system uses two independent Hall-Effect *Wheel Speed Sensors*. One sensor is mounted to the front left fork leg and one is mounted to the rear brake caliper bracket. Two *Pulse Rings* are also used, one mounted to the left front brake disc hub and one to the rear brake disc hub, which rotate with the wheels. When the vehicle is in motion, the multiple reluctor segments on each pulse ring pass by the center pole of the respective wheel speed sensor, generating an electrical pulse signal in the sensor which is sent to the *ECM* (mounted under the seat).

The ECM interprets wheel speed signal pulses to determine speed, rate-of-change, and front / rear wheel speed differential to “decide” if wheel lock-up is about to occur. When wheel lock-up is imminent during a braking event, the ECM controls the operation of solenoids and a pressure pump (located inside the *ABS Module)* to regulate the amount of line pressure and cycles (length of time) applied to the caliper pistons and brake pads. This pressure / time modulation can often be felt at the brake lever or the brake pedal during an ABS braking event and is a normal condition. Note that the brake fluid is not diverted inside the module and does not “flow” in the system any more than occurs in a conventional (non-ABS) brake system.

If the surface coefficient changes (such as moving from wet pavement to dry pavement) the ABS system will recalculate (in a matter of milliseconds) and adjust pressure output to caliper(s) as required.

In the event of a system fault, the ECM turns on the ABS indicator lamp (via the CAN BUS) and leaves it on even after vehicle speed exceeds 6 mph (10 kph) activation speed.

If a system fault occurs, the light will remain on (and ABS will not be active) until the ignition key is turned to OFF position and back to ON.

The ABS Module Assembly is serviceable only as an assembly. The module itself is not rebuildable.

Disconnect negative (-) battery cable from battery before servicing ABS brake lines or system components.

© 2009 Polaris Sales Inc.

ABS SYSTEM COMPONENTS

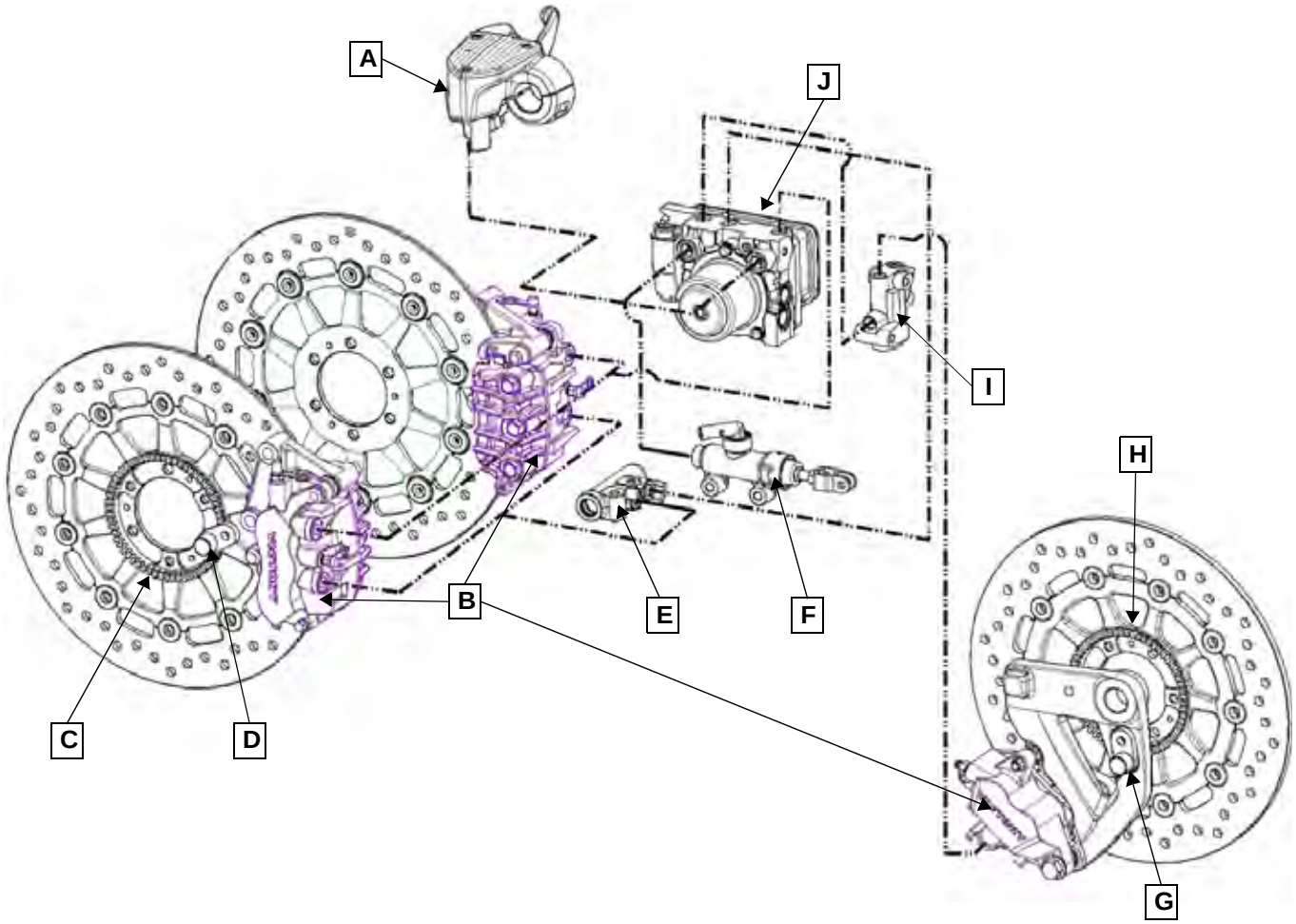

A	Master Cylinder (Front)	F	Master Cylinder (Rear / Linked)
B	Calipers	G	Wheel Speed Sensor (Rear)
C	Pulse Ring (Front)	H	Pulse Ring (Rear)
D	Wheel Speed Sensor (Front)	I	Proportion Valve
E	Delay Valve	J	ABS Module (Rear)

© 2009 Polaris Sales Inc.

ABS SYSTEM CIRCUIT DIAGRAMS

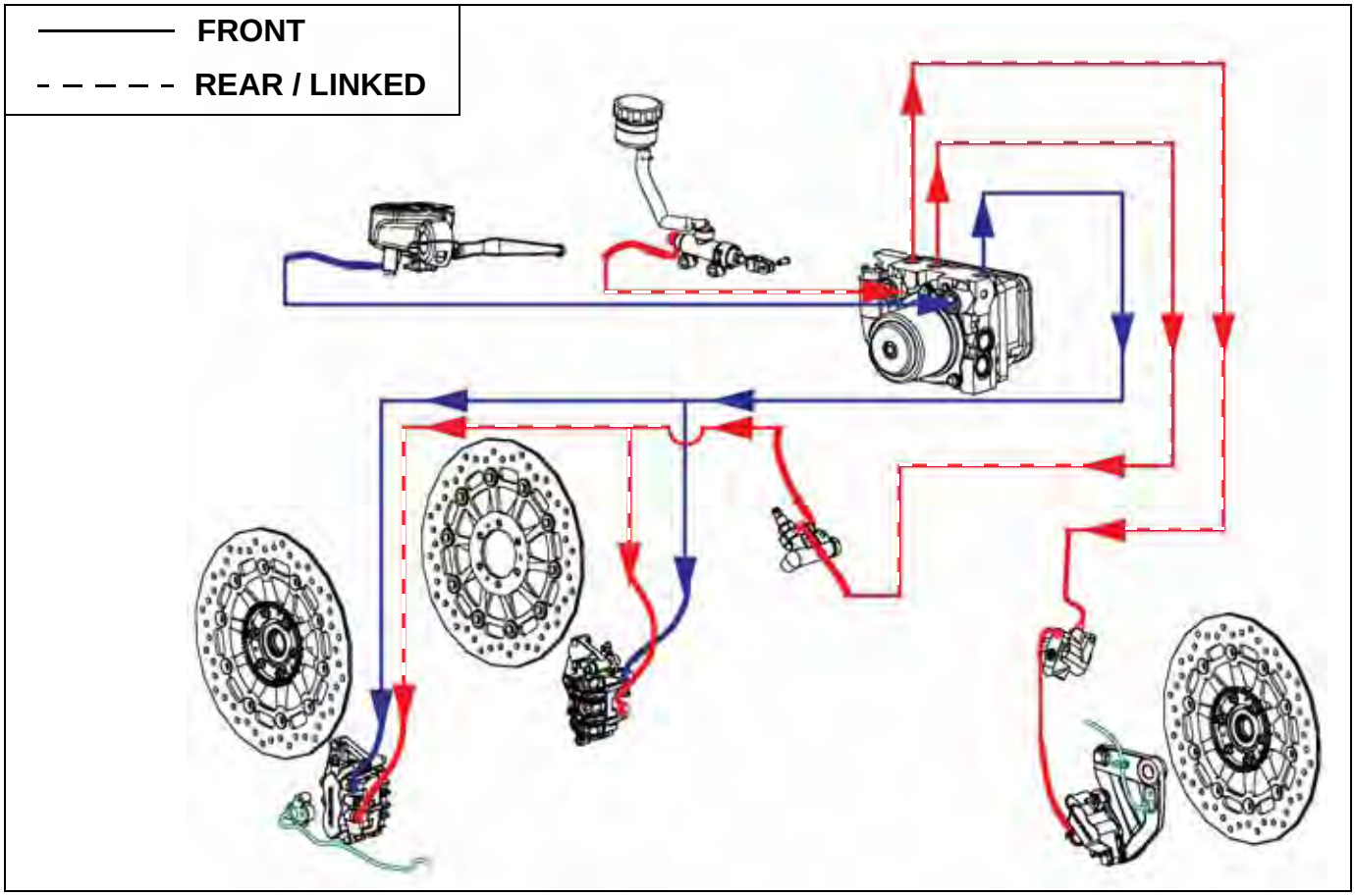

ABS WIRE HARNESS

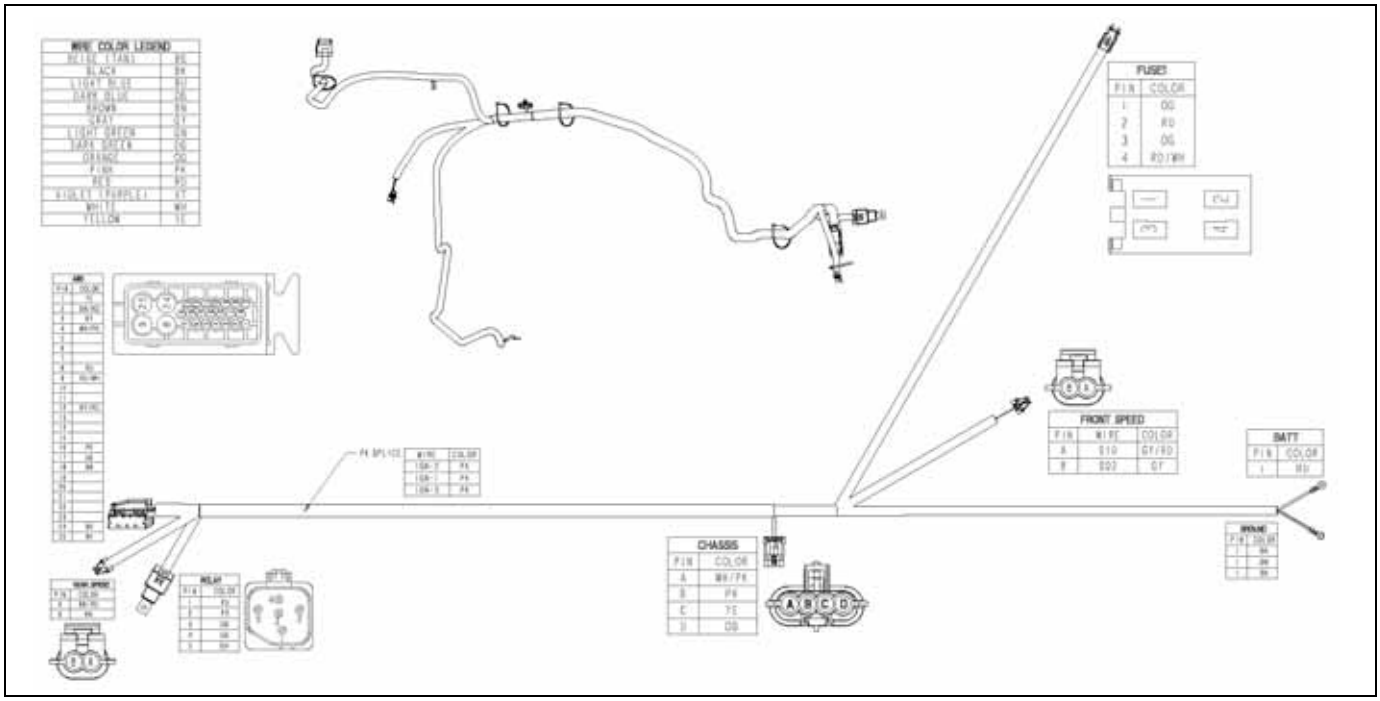

© 2009 Polaris Sales Inc.

ABS SYSTEM - FRONT BRAKE

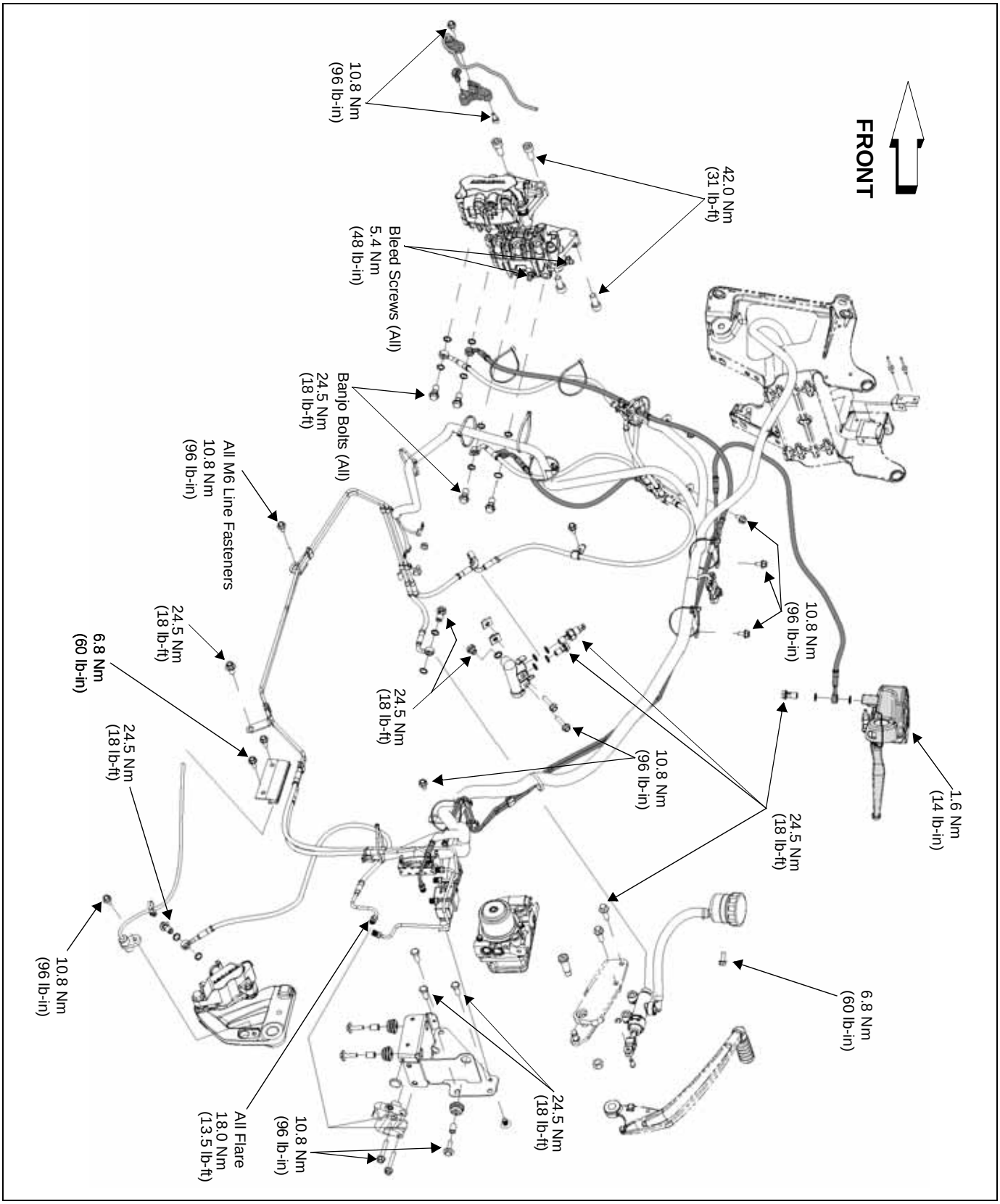

© 2009 Polaris Sales Inc.

ABS SYSTEM - REAR BRAKE (LINKED)

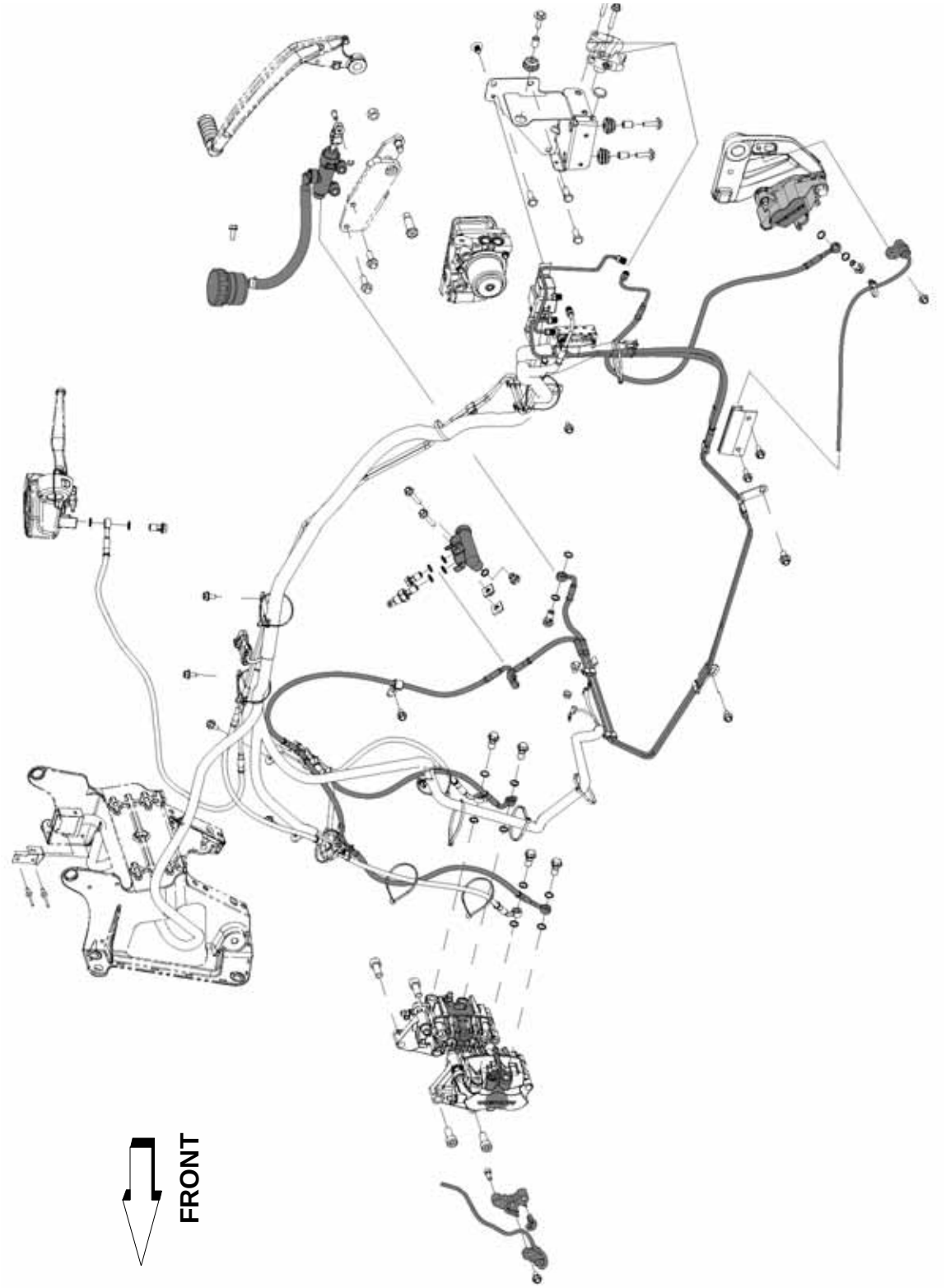

See previous page (ABS System Front Brake) for notes and fastener torque values.

© 2009 Polaris Sales Inc.

ABS SYSTEM - WIRING HARNESS / TIE STRAP LOCATION

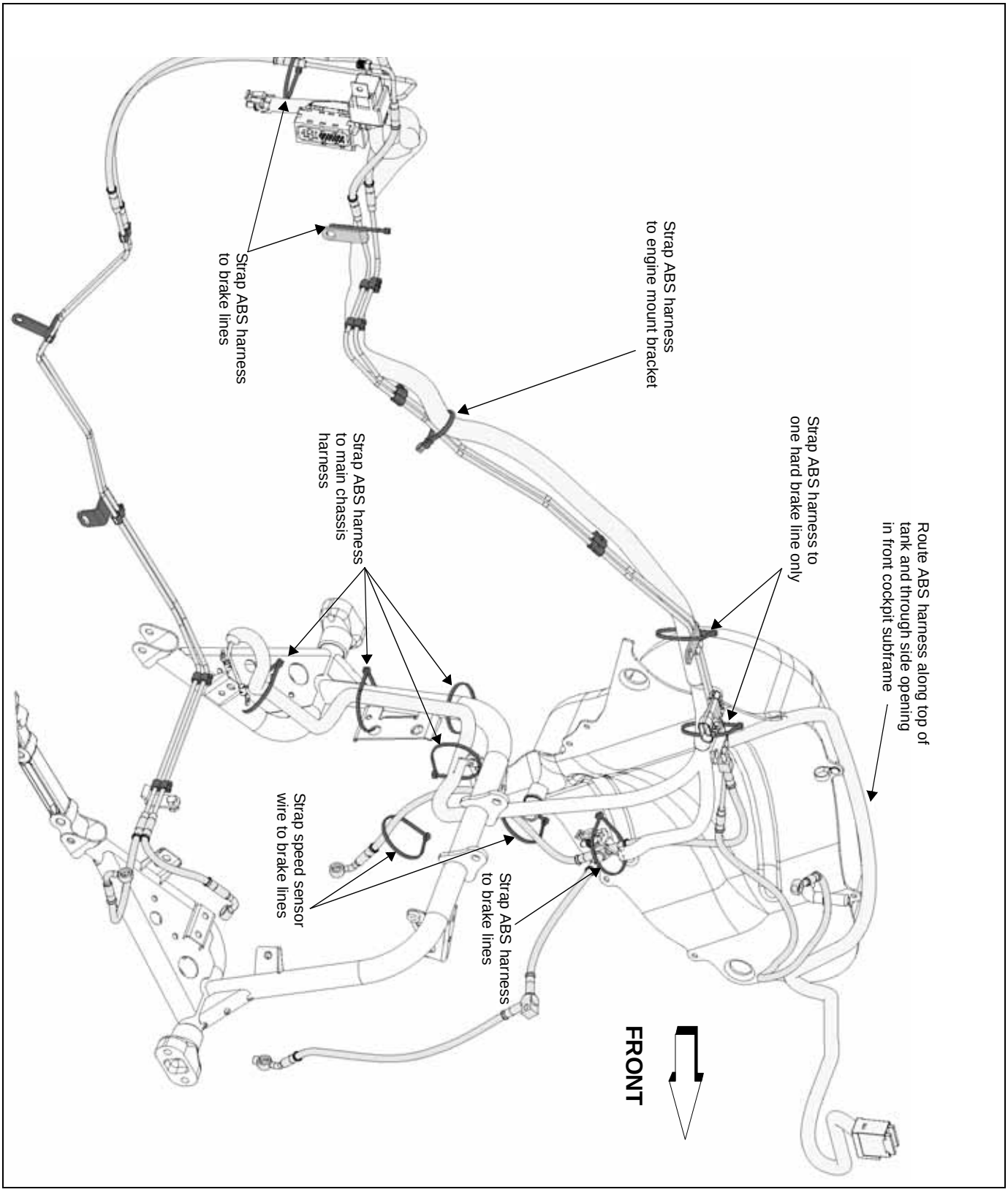

© 2009 Polaris Sales Inc.

ABS SYSTEM - MODULE CONNECTIONS

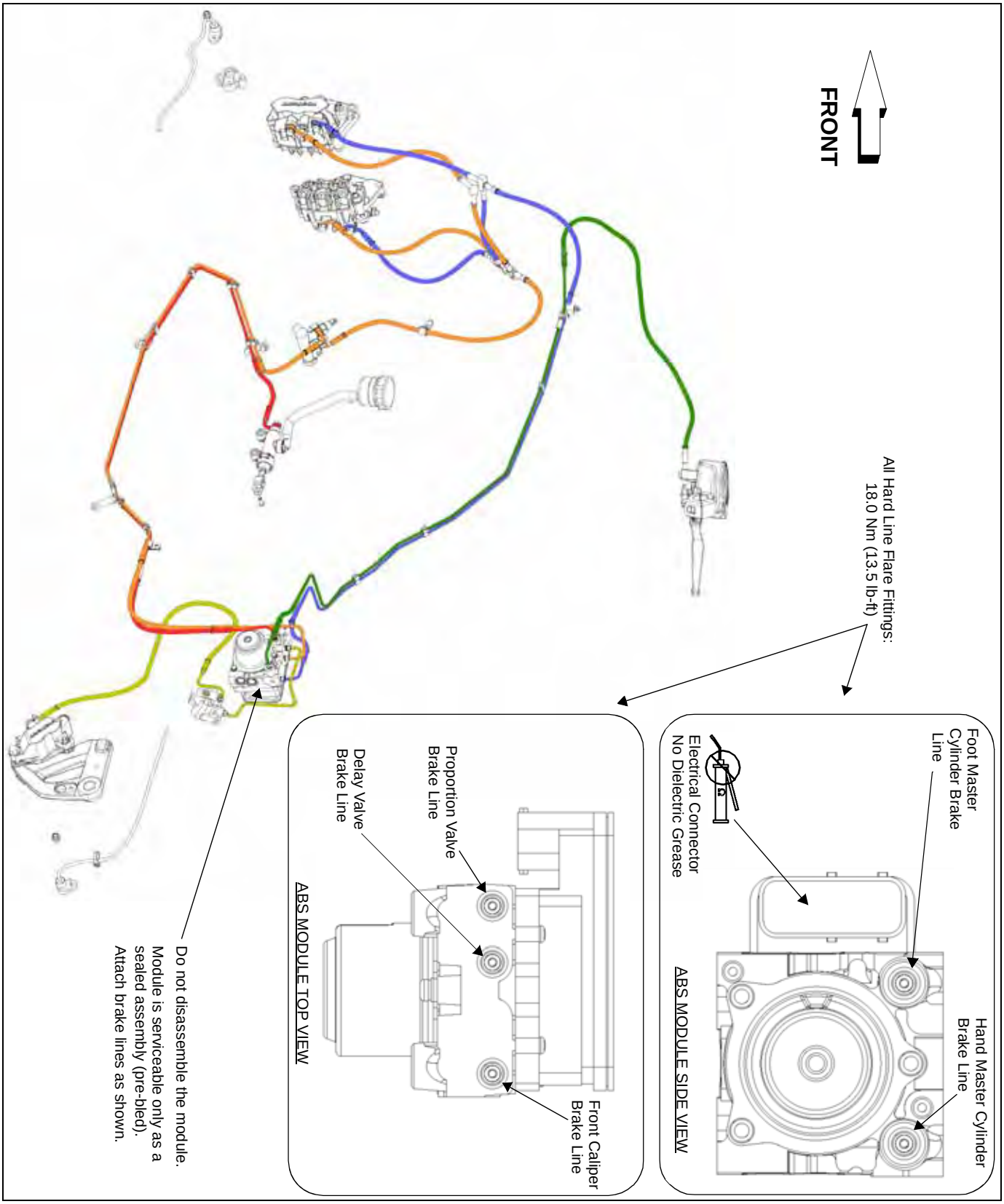

© 2009 Polaris Sales Inc.

ABS BRAKE VACUUM BLEEDER

A vacuum bleeder is recommended for ABS system bleeding and can also be used to bleed conventional (non-ABS) brake systems. One style of bleeder is shown below.

Pressure / Vacuum Pump PV-43545 can also be used as a vacuum source.

ABS FLUID CHANGE

Review Brake Fluid Replacement and Bleeding Precautions on page 15.13 before working with brake fluid.

Refer to page 15.14 for reservoir fluid level information. Approximately 3 pints of brake fluid are required for a complete system fill.

NOTE: When bleeding or flushing the system, monitor fluid level in master cylinder reservoir constantly. DO NOT allow fluid level to fall below the LOW level.

Use only DOT 4 brake fluid from a sealed container.

NOTE: EMPTY LINES - If system is dry or very low on fluid due to parts replacement or disassembly, fill reservoir and pump lever or pedal slowly through stroke range until air bubbles no longer rise through the fluid into the reservoir.

NOTE: FLUSHING THE SYSTEM - Brake systems should be flushed every 2 years or more often if the fluid is discolored. To flush the system, follow normal brake bleeding process, and pump fluid through the system until fluid moving through the bleeder hose is clear. Do not allow reservoir level to fall below the LOW level or complete system bleeding will be required.

ABS REAR (LINKED) BRAKE BLEEDING

NOTE: Bleed calipers of the linked brake in this order: Rear, Front Left, Front Right. The use of a vacuum bleeder is recommended. DO NOT allow fluid level in reservoir to drop below the LOW mark at any time during the bleeding procedure.

NOTE: Repeat entire bleed procedure at least once.

1. Remove rubber cap from rear caliper bleed screw (A) and place an 8mm box end wrench (B) on the screw.
2. Attach a tight-fitting clear hose (C) from the vacuum bleeder to the bleed screw and apply vacuum.

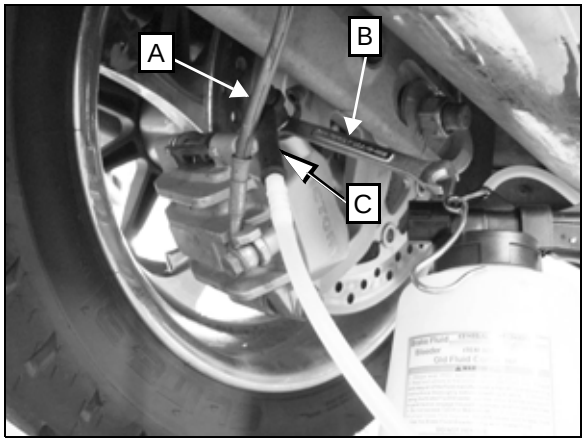

3. Fill rear brake fluid reservoir and leave cover off so fluid can be added as it is drawn through the system.
4. Open bleed screw about 1/4 turn.
5. Pump brake pedal repeatedly with smooth full strokes while adding brake fluid to the reservoir as required. For best results pump the pedal at a fairly rapid rate but avoid pumping too fast or fluid may become aerated. After about 2 cups of fluid have been run through the system, the bleeder hose should have clear, bubble-free fluid running through it.
6. Close bleeder screw and fill the brake fluid reservoir.
7. Proceed to Step 8 to bleed the linked center piston of the left front brake caliper.

© 2009 Polaris Sales Inc.

8. Remove rubber cap from the lower bleed screw (D) of *front left* caliper and install an 8mm box end wrench.

9. Connect bleeder hose to the bleed screw and start vacuum.

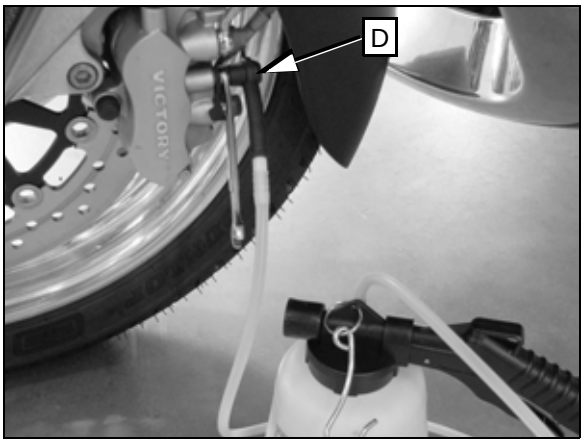

IMPORTANT: Firm brake pedal pressure is required during this procedure to ensure the delay valve opens enough to purge the front calipers.

10. Pump brake pedal repeatedly with smooth full strokes while adding brake fluid to the reservoir as required. For best results pump the pedal at a fairly rapid rate but avoid pumping too fast or fluid may become aerated. After about 2 cups of fluid have been run through the system, the bleeder hose should have clear, bubble-free fluid running through it.

11. Close bleeder screw and fill the brake fluid reservoir.

12. Proceed to Step 13 to bleed the linked center piston of the right front brake caliper.

13. Remove rubber cap from the lower bleed screw (E) of *front right* caliper and install an 8mm box end wrench.

14. Connect bleeder hose to the bleed screw and start vacuum.

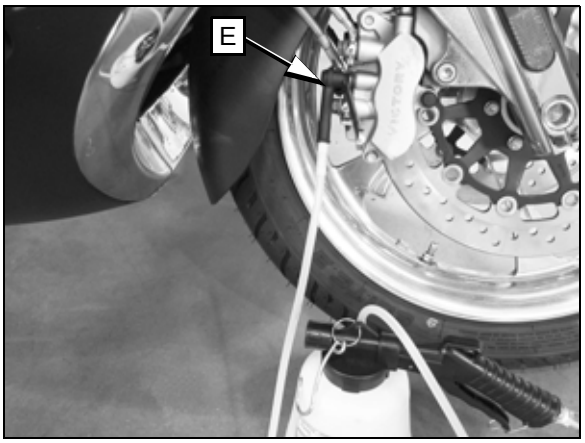

15. Pump brake pedal repeatedly with smooth full strokes while adding brake fluid to the reservoir as required. For best results pump the pedal at a fairly rapid rate but avoid pumping too fast or fluid may become aerated. After about 2 cups of fluid have been run through the system, the bleeder hose should have clear, bubble-free fluid running through it.

16. Close bleeder screw and fill the brake fluid reservoir.

17. *Repeat the entire bleeding process* on the rear, left front, and right front calipers to be sure all air is purged from the system.

NOTE: A properly bled rear brake system should not allow the brake pedal to travel more than 20 mm (.79”) with 20 lbs. (9.07 kg) of force applied.

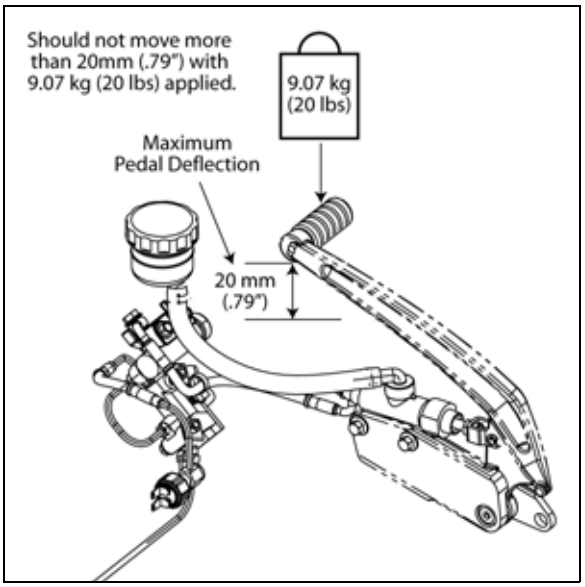

18. Torque all bleed screws to 5.4 Nm (48 lb-in) and install the rubber caps.

19. After completing the bleeding procedure a second time, inspect brake fluid level and add if necessary.

20. Clean the reservoir cover, diaphragm, and reservoir sealing surface. If diaphragm is extended, return it to normal (flat) position. Install diaphragm and cover.

21. If pedal is not firm, repeat bleeding procedure and insect brake system. See Troubleshooting at the end of this chapter.

© 2009 Polaris Sales Inc.

ABS FRONT BRAKE SYSTEM BLEEDING

NOTE: Bleed left front caliper first (upper bleed screw) then right caliper (upper bleed screw).

NOTE: Repeat the bleeding procedure at least once.

1. Pull brake lever forward and rotate reach adjustment dial to the “1” position (longest reach) to maximize lever stroke for bleeding.

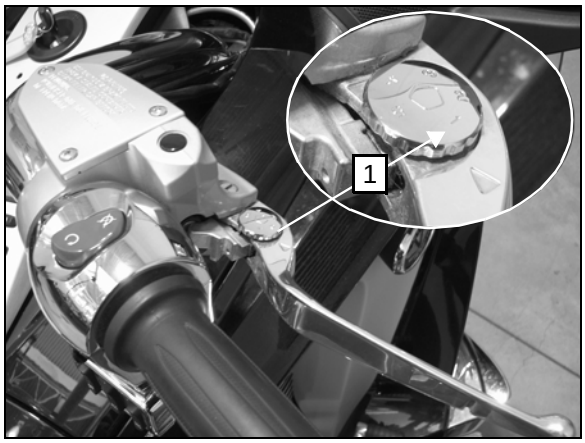

2. Remove front brake fluid reservoir cover and leave it off so fluid can be added as it is drawn through the system.
3. Remove rubber cap from top bleeder screw on *front left* caliper and install an 8mm box end wrench (A).
4. Attach tight fitting clear hose from vacuum bleeder (B) to bleed screw and apply vacuum.

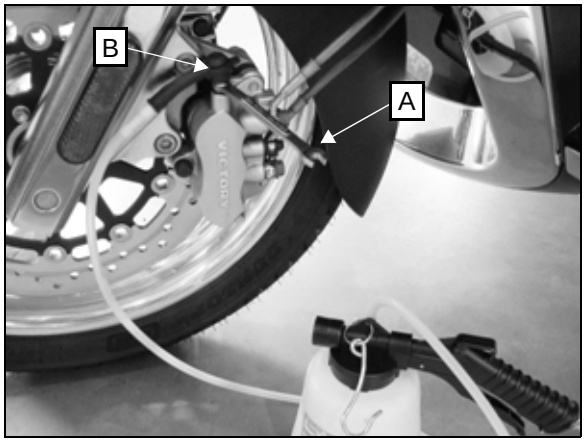

5. Hold lever to handlebar or hold firm pressure on lever, then open bleed screw about 1/4 turn.
6. Pump brake lever repeatedly with smooth full strokes while adding brake fluid to the reservoir as required. For best results pump the lever at a fairly rapid rate but avoid pumping too fast or fluid may become aerated. After about 2 cups of fluid have been run through the system, the bleeder hose should have clear, bubble-free fluid running through it.
7. Close bleeder screw and fill the brake fluid reservoir.
8. Proceed to Step 9 to bleed the right front brake caliper.
9. Remove rubber cap from top bleeder screw on *front right* caliper and install an 8mm box end wrench (C).
10. Connect vacuum bleeder hose to the bleed screw and start vacuum.

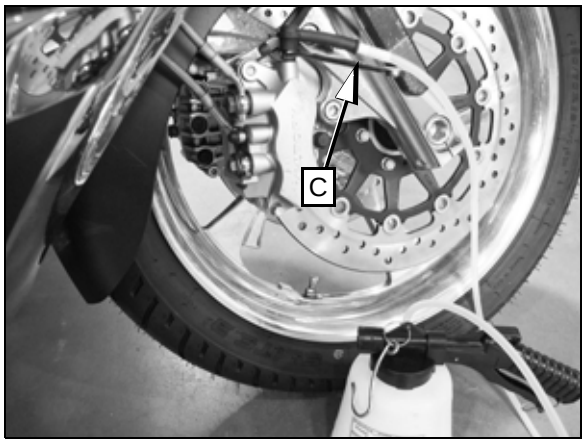

11. Hold lever to handlebar or hold firm pressure on lever, then open bleed screw about 1/4 turn.
12. Pump brake lever repeatedly with smooth full strokes while adding brake fluid to the reservoir as required. For best results pump the lever at a fairly rapid rate but avoid pumping too fast or fluid may become aerated. After about 2 cups of fluid have been run through the system, the bleeder hose should have clear, bubble-free fluid running through it.
13. Close bleed screw.
14. Once both front calipers have been bled, repeat procedure again on left caliper, then right to ensure all air has been purged.
15. Fill fluid reservoir and install diaphragm and cover. Torque screws to 1.5 Nm (13 lb-in).
16. Perform Brake Lever Reserve Inspection on page 15.44. *If lever reserve is not sufficient (lever contacts hand grip at less than specified pull force) perform the Supplementary Bleeding Procedure on page 15.43. If lever reserve is sufficient, reset lever reach to original position.*

© 2009 Polaris Sales Inc.

ABS FRONT BRAKE SUPPLEMENTARY BLEEDING PROCEDURE

If air is still trapped after performing the bleeding procedure on ABS Front Brakes:

This additional bleeding procedure will help purge trapped air from the front ABS brake system lines and must be performed if the front brake lever does not pass the *Lever Reserve Inspection*.

17. Move the motorcycle to an area with a flat, hard-surfaced floor or concrete.

18. Place protective mats along right side of motorcycle and position them to protect the contact surface of the front and rear tipover boards in the next step.

19. With the aid of an assistant, set the motorcycle on the right side tipover boards with mats placed underneath.

20. Pump the front brake lever 10-15 times and tap lightly on brake lines to release air bubbles.

21. Allow 15 minutes for air to move up through the lines and into the reservoir.

22. With the aid of an assistant, set the motorcycle upright and onto the side stand.

IMPORTANT: The passenger hand rails are not intended for use as a lift point. DO NOT lift the motorcycle with the hand rails. Have an assistant help you and use the handlebars to stand the motorcycle back to the upright position.

23. Perform the *Brake Lever Reserve Inspection* to verify the system is sufficiently purged of air.

24. Reset lever reach to original position.

© 2009 Polaris Sales Inc.

BRAKE LEVER RESERVE INSPECTION

1. Turn handlebars fully LEFT.

2. On levers with adjustable reach, set lever reach to position 5 (closest to handlebar).

3. Place grommet of Brake Lever Reserve Inspection Tool PV-50104 on ball end of front brake lever.

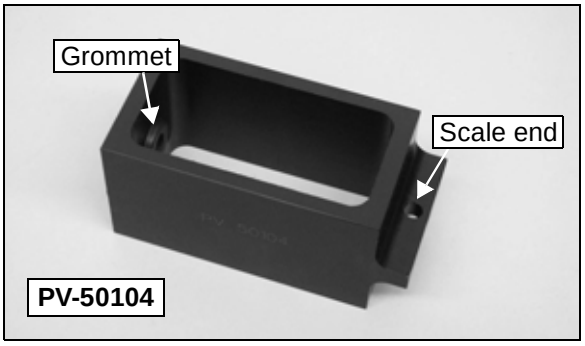

4. Connect a scale (commercially available) with a minimum of 25 kg / 50 lb capacity to end of tool.

5. Keep tool centered so it does not touch hand grip. Pull on scale to specified force.

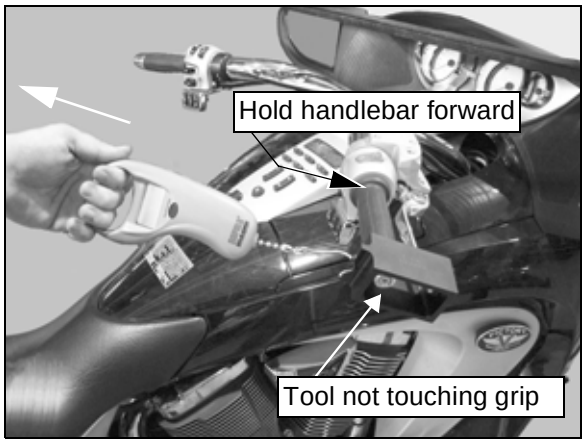

Front Brake Lever Reserve Pull Force

MODEL	PULL FORCE (MINIMUM)
Vision (Non-ABS)	20.4 kg (45 lbs).
Vision ABS	15.5 kg (34 lbs).

6. Have an assistant verify brake lever *does not* contact hand grip. Clearance must exist at specified pull force as shown.

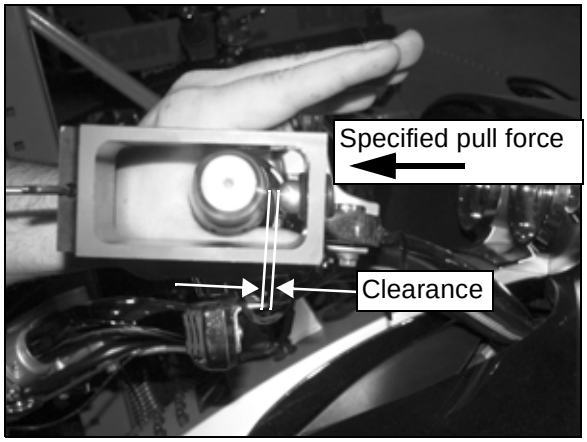

7. If lever makes contact with hand grip or bar end, bleed the front brake system (page 15.42). If system has already been bled, perform the Supplementary bleeding procedure (page 15.43) to purge remaining trapped air and then repeat the lever reserve test to ensure reserve (clearance) exists.
8. See troubleshooting if bleeding problems persist.

© 2009 Polaris Sales Inc.

ABS TROUBLE CODES

Connect Digital Wrench to view codes.

ABS CODE NUMBER	DESCRIPTION
C0020	ABS Motor Lock
C1020	ABS Motor Stuck OFF
C1021	ABS Motor Stuck ON
C1022	ABS Pulsar Front
C1023	ABS Pulsar Rear
C1024	ABS Solenoid (RRI) Open or Shorted
C1025	ABS Solenoid (RRO) Open or Shorted
C1026	ABS Solenoid (FFI) Open or Shorted
C1027	ABS Solenoid (FFO) Open or Shorted
C1028	ABS Solenoid (RFI) Open or Shorted
C1029	ABS Solenoid (RFO) Open or Shorted
C1030	ABS Front Wheel Speed Sensor Open or Shorted to Ground
C1031	ABS Front Wheel Speed Signal Failure
C1032	ABS Actuator (Front) Wheel Lock or VSS Failure
C1033	ABS Actuator (Rear) Wheel Lock or VSS Failure
C1034	ABS Failsafe Relay Fault
C1036	ABS Rear Wheel Speed Sensor Open or Shorted to Ground
C1037	ABS Rear Wheel Speed Sensor Signal Failure
C1038	ABS Source Voltage Low
C1039	ABS Source Voltage High
C1040	ABS Tire Size Mismatch
C1041	ABS Module Fault
C1042	ABS Incomplete Evacuation and Fill
C1045	Trip Sudden Deceleration - Open / Short

© 2009 Polaris Sales Inc.

TROUBLESHOOTING

TROUBLESHOOTING - BRAKE SYSTEM

ABS system troubleshooting chart is on page 15.48.

Problem	Symptom and/or Possible Cause	Possible Repair
Weak Brakes or Erratic Braking Action	Fluid Leakage (External) Fluid Leakage (Internal of Master Cylinder) Worn Pads Oil Contamination of Brake Pads and/or Brake Disc Air In System Low Brake Fluid Level In Reservoir Excessive Brake Disc Runout Worn or Damaged Wheel Bearings. Loose Front Axle Nut or Clamps or Loose Rear Axle Caliper Mount Surface Uneven Or Misaligned; Missing or Damaged Fasteners Clogged or Restricted Hydraulic Line Caliper Bracket Misaligned, Bent or Distorted Loose Brake Disc Brake Pads Glazed	Repair or Replace Leaking Component Replace Master Cylinder Replace Brake Pads Pads Must Be Replaced. Disc May Be Cleaned. Bleed Air From System Fill Reservoir, Bleed Brakes, Top Off Fluid Level. Replace Brake Disc. Replace Wheel Bearings. Torque Correctly, See Chapter 12 & 13 Inspect / Repair Replace Line(s) Replace Bracket Install New Screws. Torque to Specification Replace Pads. Avoid Needless Heavy Braking for 100-200 miles (Burnish New Brake Pads).
Poor Brakes or No Brakes When First Applied. Brake Lever Pressure Present If Lever Is “Pumped”.	Air In System Low Brake Fluid Level In Reservoir Brake Disc is Bent or Warped Caliper Misalignment External Leak Internal Leak (master cylinder) Faulty Brake Hose / Pinched Supply Burr on Disc	Bleed Air From System Fill Reservoir, Bleed Brakes, Top Off Fluid Level. Replace Brake Disc Determine Cause and Correct Repair or Replace Damaged Component Repair or Replace Master Cylinder Inspect for Bulges/ Kinks / Replace Inspect Disc
Brake Pedal or Brake Lever Pulsates	Brake Disc Bent or Warped Mounting Surface of Brake Disc Uneven / Disc Loose Caliper Mount Surface Uneven Or Misaligned; Missing or Damaged Fasteners	Replace Brake Disc Repair or Replace as Necessary Repair or Replace as Necessary
Excessive Lever or Pedal Travel / Spongy Brake Feel.	Air in System Loose Mounting Hardware Low Brake Fluid Level In Reservoir Incorrect Brake Fluid Used See “Weak / Erratic Brakes” and Poor Brakes” possible causes above.	Bleed Air From System Repair as Necessary Fill Reservoir, Bleed Brakes, Top Off Fluid Level. Flush System and Replace With Correct Fluid
Fluid Leakage	Loose Banjo Fittings Damaged Banjo Fitting Sealing Washers Cracked / Damaged Hose Worn Master Cylinder Piston, Caliper Piston(s) or Seals Diaphragm (master Cylinder reservoir) Leaking Fluid level too high (new brake pads installed without removing added fluid)	Tighten to Specified Torque Replace Replace Repair / Replace Master Cylinder or Wheel Caliper. Inspect / Replace Cover, Cap, Diaphragm or Reservoir as Required Correct fluid level

© 2009 Polaris Sales Inc.

Problem	Symptom and/or Possible Cause	Possible Repair
Brakes Drag Excessively or Self-Apply (Brakes Overheat)	Reservoir Over-filled	Adjust Level As Necessary
	Brake Pedal Or Lever Not Returning Completely To Rest Position	Inspect Linkage, Pivots and Mechanism For Cause Of Binding Or Restricted Movement;
	Inadequate Freeplay	Measure Pedal Clearance / Adjust
	Compensating Port Plugged	Repair or Replace Master Cylinder
	Internal Corrosion of Components (Master Cylinder / Caliper)	Replace Damaged Component
	Rear Caliper: Corrosion of Sliding Parts, Bent or Damaged Parts	Repair or Replace As Necessary
	Contaminated Brake Fluid	Flush System, Install Correct Fluid
	Caliper Pistons Sticking	Repair / Replace Caliper (Corrosion / Buildup of Residue In Caliper Piston Seal Grooves)
	Rider Error (Operator Riding Brakes)	Educate Operator
Brake Squeal/Squeak	If noise is minor and inconsistent, some brake squeak / squeal is characteristic of disc brakes and usually caused by dust / dirt on pads and / or brake disc.	Apply non oil-based solvent (such as Victory Brake Cleaner or isopropyl alcohol) to a clean shop towel and wipe dust / dirt from brake disc.
	Pad Not Secure in Caliper	Repair as Necessary. Inspect Pad Installation
	Aftermarket (not genuine Victory) Parts	Install Genuine Victory Parts
	Worn or Damaged Wheel Bearing(s)	Replace
	Worn Pads / Disc	Replace

© 2009 Polaris Sales Inc.

ABS SYSTEM TROUBLESHOOTING

ABS SYSTEM TROUBLESHOOTING		
Problem	**Symptom and/or Possible Cause**	**Possible Repair**
ABS light on at all times	Blown Fuse (ABS Fuse Open) System Fault (Fault Code Active) Sensor Fault; Loose sensor; Damaged sensor or pulse ring. Improperly assembled fork, brake, wheel, or axle.	Replace Fuse; Inspect wiring for cause Connect Digital Wrench - View Code(s) Inspect wheel speed sensor / pulse ring for debris or damage. Inspect sensor mounting. Inspect front fork, both brake calipers, wheels and axles for proper assembly, and wheel bearings. Inspect all ABS wiring connections.
ABS light on intermittently	Wire Connection Fault Sensor Fault; Loose sensor; Damaged sensor or pulse ring.	Inspect connector at ABS module for loose, broken, or corroded wiring or connector pins. Check power supply (fuses) and ground. Inspect wheel speed sensor / pulse ring for debris or damage. Inspect sensor mount, ABS wiring connections, and wheel bearings.
ABS Noise When Active	Transmission or Drive Line Noise	Some drive line noise may be evident and is normal depending on conditions / road surfaces. Inspect brake pads, brake discs, caliper mounts, tire pressure, tread wear, and tire type. Pulsation at lever or pedal normal when ABS active.
ABS Pulsation at Lever or Pedal	Normal System Operation	Pulsation at lever or pedal is normal when ABS is active due to feedback in the brake lines from pressure modulation at the ABS module. If pulsation can be felt during normal system braking (non-ABS active braking) inspect the brake system as you would for a non-ABS equipped vehicle (brake pads, brake discs, caliper mounts, tire pressure, tread wear, and tire type, etc.)
ABS Poor Performance	System not properly bled (air in system).	Bleed system properly as described on page 15.40 and perform Front Brake Lever Reserve test on page 15.44 to verify all air is purged from the system. Inspect brake system components (discs, pads, etc.)
ABS Light On After Rear Wheel Spin	Rear wheel loss of traction was initiated below 6 mph (10 kph) and exceeded maximum time allowance parameter of system. Rear wheel loss of traction initiated above 6 mph (10 kph).	Careless or reckless driving not recommended. Bring motorcycle to a safe stop. Cycle ignition key OFF / ON to reset system. Light should go off when vehicle speed exceeds 6 mph / 10 kph. Careless or reckless driving not recommended. System Fault Code logged immediately due to wheel speed differential when ABS is active (above 6 mph / 10 kph). Bring motorcycle to a safe stop. Cycle ignition key OFF / ON to reset system. Light should go off when vehicle speed exceeds 6 mph / 10 kph.

© 2009 Polaris Sales Inc.

CHAPTER 16
BATTERY CHARGING SYSTEM

IMPORTANT INFORMATION 16.2
GENERAL. 16.2
BATTERY SAFETY 16.2
SPECIAL TOOLS 16.3
SPECIFICATIONS. 16.4
GENERAL. 16.4
CHARGING SYSTEM & ALTERNATOR 16.4
FASTENER TORQUE 16.4
BATTERY 16.5
BATTERY REMOVAL. 16.5
BATTERY CHARGING - NEW BATTERY 16.5
BATTERY CHARGING - GENERAL. 16.5
DIAGNOSTICS 16.6
TROUBLESHOOTING 16.6
BATTERY LOAD TEST 16.7
CURRENT DRAW INSPECTION (KEY OFF). 16.7
REGULATED VOLTAGE / AMPERAGE OUTPUT INSPECTION 16.8
STATOR NO-LOAD AC VOLTAGE OUTPUT INSPECTION 16.9
STATOR RESISTANCE INSPECTION 16.10
STATOR WINDINGS TO GROUND INSPECTION 16.10
VOLTAGE DROP: RECTIFIER / REGULATOR TO BATTERY(+) 16.11
RECTIFIER / REGULATOR CONNECTOR INSPECTION 16.11
DIODE LEAKAGE TEST. 16.12
REGULATOR / RECTIFIER TEST 16.13
RECTIFIER / REGULATOR REPLACEMENT 16.14
STATOR REMOVAL. 16.15
STATOR INSTALLATION. 16.15
FLYWHEEL REMOVAL 16.15

© 2009 Polaris Sales Inc.

IMPORTANT INFORMATION

GENERAL

All electrical system and component service can be performed with the engine in the frame.

CAUTIONS TO OBSERVE DURING ELECTRICAL SYSTEM SERVICE:

CONNECTORS

Always turn off ignition switch before disconnecting any electrical component.

Always verify that bullet-type connectors are free of corrosion, contamination or breaks when troubleshooting electrical problems.

Verify that bullet-type connectors are firmly seated. Listen and/or feel for a click when connecting them.

Ensure to release the lock on lock-type couplers before disconnecting them to avoid damaging the connector.

Pulling on the wires when disconnecting couplers can introduce problems. Hold the connectors themselves when disconnecting them, not their associated wires.

Inspect each male and female terminal of multi-pin connectors for corrosion, contamination, loose or bent pins.

BATTERY SAFETY

BATTERY LABEL

⚠ WARNING

Battery electrolyte is poisonous. It contains sulfuric acid. Serious burns can result from contact with skin, eyes or clothing. Antidote:

External: Flush with water.

Internal: Drink large quantities of water or milk. Follow with milk of magnesia, beaten egg, or vegetable oil. Call physician immediately.

Eyes: Flush with water for 15 minutes. Call physician immediately.

Batteries produce explosive gases. Keep sparks, flame, cigarettes, etc. away. Ventilate when charging or using in an enclosed space. Always shield eyes when working near batteries.

KEEP BATTERIES AND BATTERY ACID OUT OF REACH OF CHILDREN.

NOTICE

The charging system used on the motorcycle is calibrated for the maintenance free battery that is installed as original equipment. Do not replace with a conventional lead-acid battery.

Before troubleshooting the charging system, inspect the battery thoroughly. A discharged, poorly charged or faulty battery will make the readings obtained during charging system troubleshooting erroneous or difficult to interpret.

NOTICE

Even with a good battery, battery voltage can recover after charging, but under excessive load the battery voltage will drop quickly. Often the charging system is suspect when it is not the cause of the problem. Always inspect for excessive loads or current draw with the key OFF. Items such as incorrect wattage bulbs or a sticking brake or trunk light light switch can drain a battery even if the charging system is operating correctly.

© 2009 Polaris Sales Inc.

A battery will self-discharge when the motorcycle is not in use. Make sure to properly store the battery as outlined later in this section.

Maximum voltage and service life is only achieved when the battery is properly serviced initially. Make sure to follow instructions outlined later in this section.

Overcharging can be caused by a faulty battery (shorted cell). Test system with a known good battery when diagnosing an overcharge condition.

New batteries must be properly maintained as outlined in this section to ensure proper service life.

CAUTION

CONNECTING AND DISCONNECTING THE BATTERY
Always disconnect the negative battery cable first when removing the battery.

Always connect the positive battery cable first when connecting the battery.

If corrosion is found on terminals, remove battery and clean terminals with a solution of baking soda and water. Finish the process by cleaning terminals (both battery and battery cables) with a wire brush.

Once connections are secured, apply a thin film of Nyogel™ grease to the terminals.

Verify the positive terminal has it's protective boot in place.

CAUTION

WIRE ROUTING
Make sure that all wires are routed correctly.

CAUTION

FUSES
Fuses are in place to protect circuit wiring and components. Always determine the cause of an open fuse before installing a new fuse.

Do not increase the value of the fuse to correct the problem.

Do not use wire, tin foil or other substitutes for fuses.

CAUTION

ELECTRONIC COMPONENTS
Semiconductor parts used in electronic components will not withstand careless handling.

Do not drop or strike parts that contain semiconductors such as the ECM or rectifier/ regulator. Dropping electronic components can cause damage to the component.

Follow instructions supplied in this chapter, including chapter 5 (Fuel Injection) and chapter 17 (Ignition System), very carefully when working on electronic components. Failure to follow instructions may cause irreparable damage to the part being inspected.

SPECIAL TOOLS

The following tools are available for purchase from our tool supplier, SPX:

Engine Stop Tool: PV-43502

Flywheel Puller: PV-43533

Digital Multi-Meter: PV-43546

Connector Test Kit: PV-43526

© 2009 Polaris Sales Inc.

SPECIFICATIONS

GENERAL

Item		Specifications
Electrical (General)	Starting System	Electric
	Charging System	Permanent Magnet / 3 Phase / Full Wave Rectification
	Regulator/Rectifier	Solid State Three Phase Voltage Regulator/Rectifier
	Lighting System	12 V DC

CHARGING SYSTEM & ALTERNATOR

Item		Specifications
Alternator No Load AC Output (Minimum)		17.5 V AC @ Idle
Alternator No Load AC Output @ 2000 RPM (Minimum)		38.5 V AC @ 2000 RPM
Stator Coil Resistance (@ 21°C / 70°F) (stator Black wire to other Black wire)		Less than 1 ohm
Stator Coil Resistance To Ground (each stator Black wire to ground)		Infinite (no continuity)
Regulator/Rectifier Regulated Voltage		14-14.8 V DC
Alternator Output (Amps / Watts)		50 A
Battery (P/N 4011374)	Type	Yuasa: YTX20HL-BS
	Voltage	12 Volts DC
	Nominal Capacity @ 10 Hr Rate	18 AH
	Recommended Battery Charging Current	STD: 1.85 A for 5 to 10 hrs
	Cold Cranking Amp Rating	310

FASTENER TORQUE

Charging System		
Description	**Torque Nm**	**Torque lb-ft (in-lb)**
Battery Holder Screw	10 Nm	(85 in-lbs)
Battery Terminal Screws	4.5 Nm	(40 in-lb)
Belly Pan Screws	10 Nm	(85 in-lbs)
Center Grill Screw	4.0 Nm	(36 in-lb)
Circuit Breaker Terminal Nuts	2.8 Nm	(25 in-lb)
Flywheel (Rotor) Bolt	102 Nm	75 lb-ft
Primary Cover Screws	13 Nm	(115 in-lbs)
Regulator/Rectifier to Bracket	10 Nm	(85 in-lb)
Regulator/Rectifier Bracket to Crankcase	10 Nm	(85 in-lb)
Stator Mounting Screws	11 Nm	(100 in-lbs) Loctite™ 242

© 2009 Polaris Sales Inc.

BATTERY

BATTERY REMOVAL

1. See page 2.20.

BATTERY CHARGING - NEW BATTERY

1. Charge the battery at 1.8 amps for 5 to 10 hours. use a straight rate charger (not load sensing or battery tender type) for the initial charge of a new battery.

CAUTION

Do not attempt to quick charge the battery at any time.

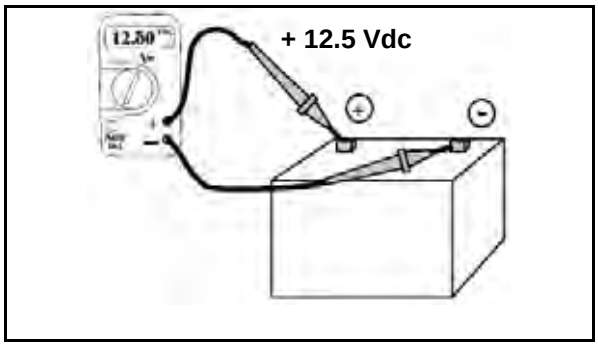

2. Remove battery from charger and let it sit for 30 minutes or longer.
3. Measure voltage with a digital multimeter. If lower than 12.5 Vdc, battery must be recharged again in accordance with step 1 and 2 above.
4. After charging battery and letting it sit for 30 minutes or more, check battery voltage again. If battery voltage is still below 12.5 Vdc, replace the battery.

BATTERY CHARGING - GENERAL

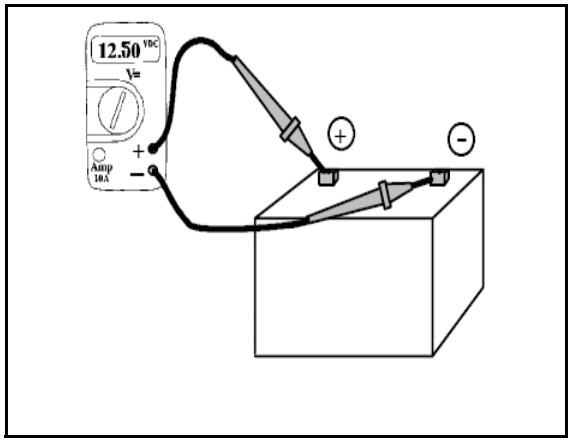

1. Measure battery voltage with a digital multimeter. The reading should be above 12.5 Vdc. If battery voltage is lower than 12.5 Vdc, battery must be charged according to the instructions given below.

CAUTION

Do not remove caps on battery while recharging. Do not attempt to inspect or add fluid to a maintenance free battery.

2. Charge battery at 1.8 amps for 5 to 10 hours.

Battery Charging Specification:

1.8 A for 5-10 hours

3. Remove battery from charger and let it sit for 30 minutes or longer.
4. Measure battery voltage with a digital multimeter. If battery voltage is lower than 12.5 Vdc, battery must be recharged again in accordance with step 1 and 2 above.
5. After charging battery and letting it sit for 30 minutes or more, check the battery voltage again. If battery voltage is still below 12.5 Vdc, replace battery.

NOTE: When motorcycle is not used for one (1) month or more, remove battery and store it in a cool, dry area. Inspect voltage monthly and charge according to above instructions if necessary.

© 2009 Polaris Sales Inc.

DIAGNOSTICS

TROUBLESHOOTING

NOTICE: The battery must be fully charged and in good condition to obtain accurate readings. Battery charging current is automatically reduced by the regulator / rectifier if the regulator / rectifier unit reaches a critical temperature (overheated). The system should be cool when testing DC charging output or when testing the regulator / rectifier to ensure accurate readings. Refer to test procedure for individual charging system components for more information.

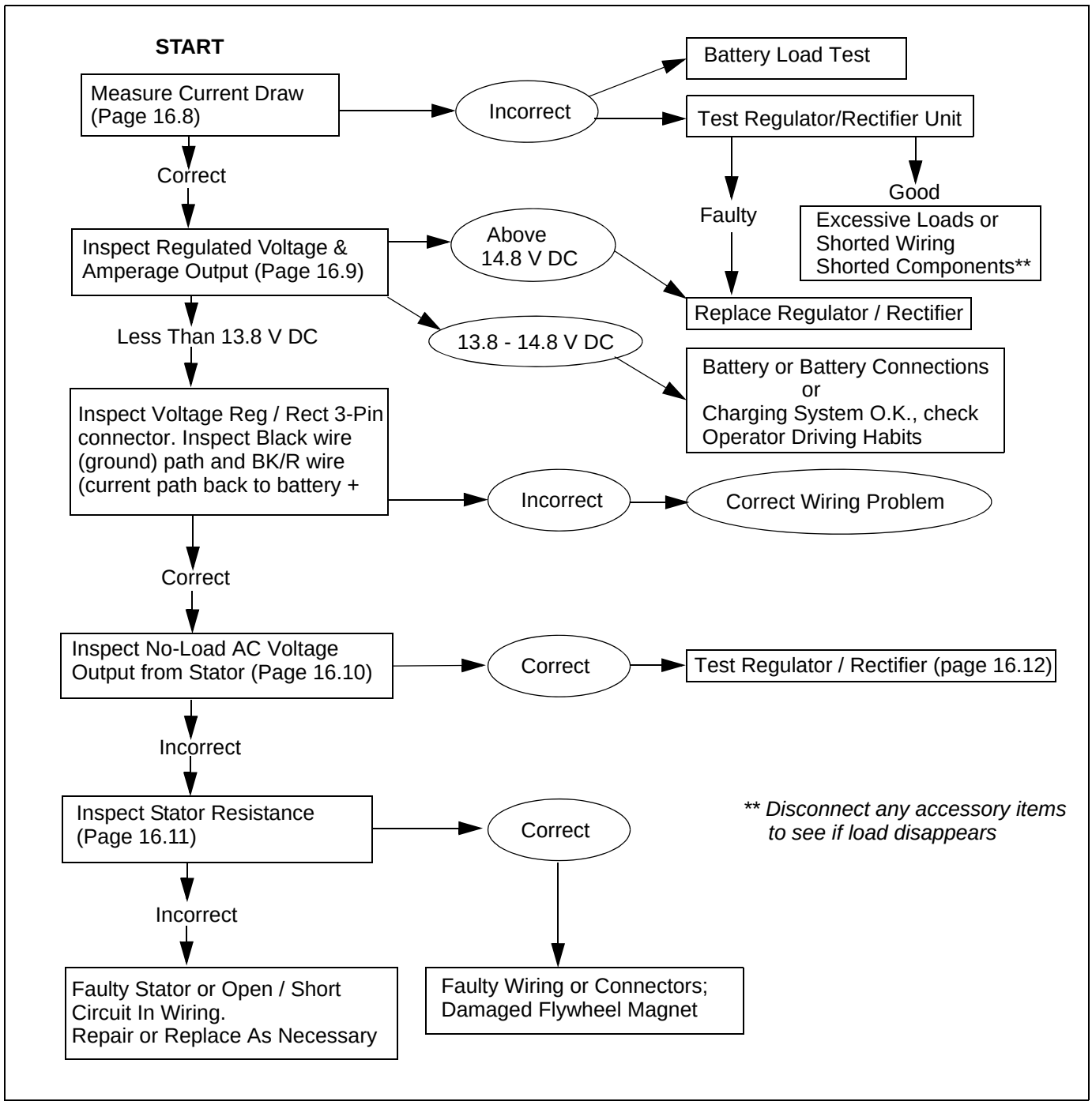

© 2009 Polaris Sales Inc.

BATTERY LOAD TEST

1. Perform a battery load test using a battery load tester. Follow the load tester manufacturer's instructions carefully.

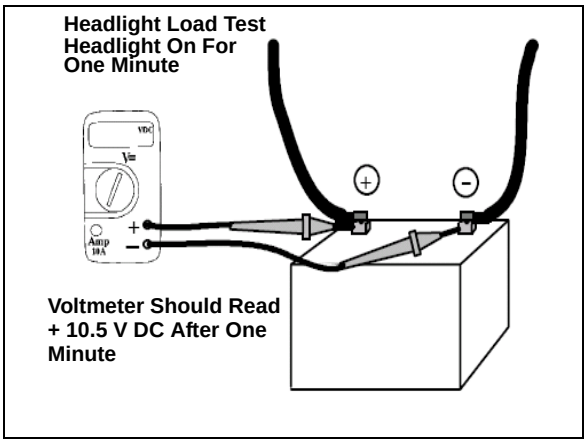

NOTE: Although not as conclusive, the following test can be used to direct troubleshooting efforts if a battery load tester is not available.

2. Charge battery as outlined in this section.
3. Install fully charged battery.
4. Connect a digital multimeter to battery and keep it connected for duration of test.
5. Turn ignition key on.
6. Switch head light to high beam position and leave it on for 1 minute (without the engine running).
7. At end of one minute, the digital multimeter should show a reading of above 10.5 V DC.
8. If battery voltage drops below 10.5 V DC, battery should be charged again and the test repeated.

CURRENT DRAW INSPECTION (KEY OFF)

Current draw is suspect if battery discharges when motorcycle is not in operation (short periods of storage).

NOTE: If the vehicle is equipped with an accessory CD player, current draw will be considerably higher. The higher draw remains for 36 hours after the key is shut off, at which time the CD player is automatically disconnected from the system. Current draw specifications listed below are for vehicles not equipped with a CD player.

1. Turn key OFF and wait at least 30 seconds for all powered circuits to disconnect before performing the key-off current draw test.

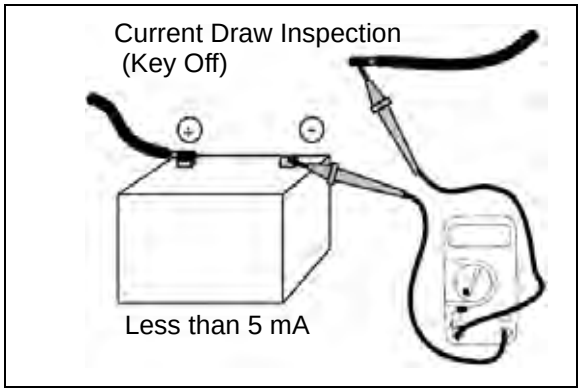

2. Disconnect ground cable (-) from battery.
3. Connect digital multi-meter red (+) probe to ground cable and connect black DMM (-) probe to battery negative (-) terminal.

Fluke™ 73 Multimeter PV-43546

4. Read current draw (be sure 30 seconds has passed since key was turned OFF).
5. If current draw exceeds specifications, inspect wiring and components for short to ground.

Specification: Less than 5 mA

6. Locate the faulty component or wiring by disconnecting wiring connections one-at-a-time while observing current draw. Use the wiring diagram to locate possible current draws from battery. When current draw falls within specifications, the last connection disconnected shows which circuit or component is affected.

© 2009 Polaris Sales Inc.

REGULATED VOLTAGE / AMPERAGE OUTPUT INSPECTION

1. Remove negative battery leads and connect a 12V shunt as outlined in the instructions provided with shunt or use an inductive amperage clamp.

NOTICE: Current can easily exceed the measuring limits of your ammeter or its internal fuse.
An inductive ammeter clamp or a suitable shunt must be used to avoid meter or fuse damage.

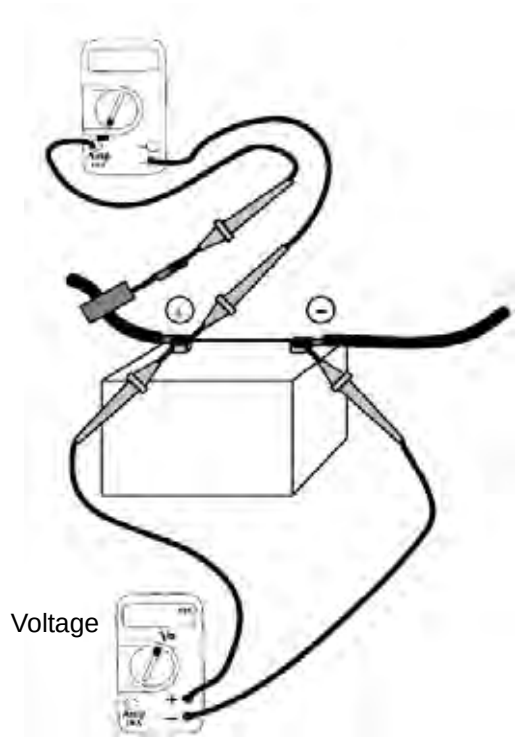

2. Set digital multimeter (DMM) to V DC scale.
3. Connect DMM red (+) lead to battery red (+) lead and DMM black (-) lead to battery black (-) lead.
4. Start engine and warm to operating temperature.
5. At 1000 RPM or slightly above; the ammeter should reach the “break-even” point (no amperage leaving the battery) and the voltmeter should be rising toward 14 VDC.

Specification: “Break-even” point for charging
Idle RPM (Approx.)

6. Increase engine RPM to 2500. The ammeter should rise a slight amount, then stabilize. Volt meter should read above 14 V DC.
7. Use results obtained from preceding tests and the following descriptions to determine if charging system is functioning properly.

CHARGING SYSTEM OPERATING CORRECTLY: Ammeter goes up a small amount, then stabilizes slightly above +0 amps. Volt meter rises toward 14.8 ± V DC, drops off a little and starts to stabilize.

LOW BATTERY: Amperage continues to rise, voltage levels off as battery is absorbing voltage. Charging system may be O.K. Need to charge battery fully or use a good battery and repeat test. Meters will indicate similar reading to the overcharging chart.

CHARGING SYSTEM UNDERCHARGING: Ammeter drops to 0 or remains below 0 (negative reading) at all rpm, volt meter remains the same or goes down. Go to voltage drop inspection.

CHARGING SYSTEM OVERCHARGING: Ammeter rises well above 0 and remains there or continues to rise. Volt meter goes well above 14.8 V DC and may continue to rise. Go to voltage regulator/rectifier inspection.

EXCESSIVE LOAD: Amperage levels off or starts to drop, voltage continues to rise. Load may be excessive (accessories or shorted components). Determine if excessive loads are present. Disconnect accessories and re-test).

8. Turn ignition key off.
9. Remove ammeter shunt or inductive clamp.
10. Re-connect negative battery cables to battery.
11. Install seat and right and left side covers.

© 2009 Polaris Sales Inc.

STATOR NO-LOAD AC VOLTAGE OUTPUT INSPECTION

NOTE: DMM set to VAC (if meter has Vrms selection use Vrms). Engine cool - not to operating temperature. Regulator Rectifier disconnected (3-pin connector). Engine must be running. Be sure to heed the following Warnings and Cautions.

WARNING

HOT COMPONENTS
The engine and exhaust system become very hot during operation and remain hot for a period of time after the engine is shut off. Wear insulated protection for hands and arms or wait until the engine and exhaust system have cooled sufficiently before working on the machine.

WARNING

CARBON MONOXIDE
Never run an engine in an enclosed area. Exhaust contains poisonous carbon monoxide gas that can cause loss of consciousness and may lead to death. If you must run the engine to do some repairs, do so in an open area or with an exhaust evacuation system operating.

CAUTION

VOLTAGE / ARCING
Use caution not to touch any of the connections or allow the exposed terminals to come close to any other part of the vehicle or other objects, as an arc may occur.

1. Locate three wires coming from *stator* and follow the wires to the 3-pin connector.
2. Disconnect 3-pin connector (A).

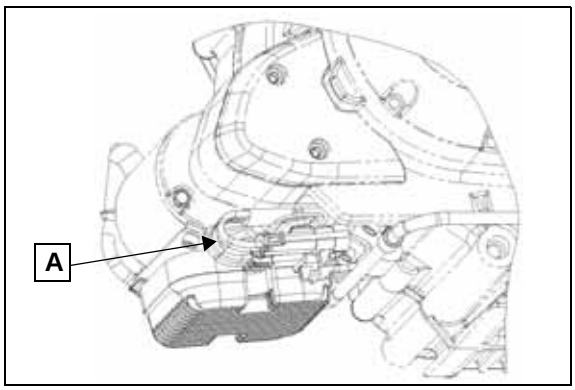

3. Set Digital Multimeter (DMM) to AC Volts scale.
4. Connect one lead of DMM to Pin A on wire connector that comes from stator.

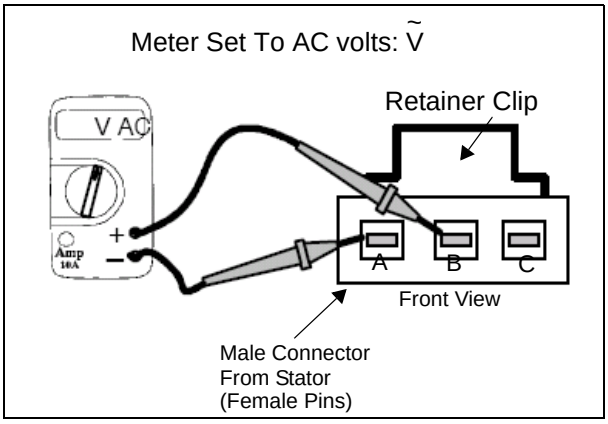

5. Connect other lead to pin B.
6. Start engine and let it idle. Observe DMM reading.
7. The DMM should indicate a minimum reading of 21 V AC at idle.
8. If using a meter other than the Fluke 73, be sure your meter reads rms volts.
9. Repeat test for pins A & C.
10. Repeat test for pins B & C.

Specification:
No load AC Volts @ 900 RPM:
50A Alternator - Approx ~ 17.5 VAC +/- 1 @ 900 RPM

NOTE: The test results in steps 7, 8 and 9 can read more than specified VAC, but it is important that the reading for each pair of wires is approximately equal.

11. Increase RPM to 2000. Repeat Steps 4-10.

Specification:
No load AC Volts @ 2000 RPM:
50A Alternator - Approx ~ 38.5 VAC +/- 1 @ 2000 RPM

NOTE: The test results obtained in step 11 can read more than specified VAC, but it is important that they are all approximately equal.

© 2009 Polaris Sales Inc.

STATOR RESISTANCE INSPECTION

NOTICE
Do not run the engine during this test.

NOTE: Meter set to measure resistance. Engine OFF and cool.

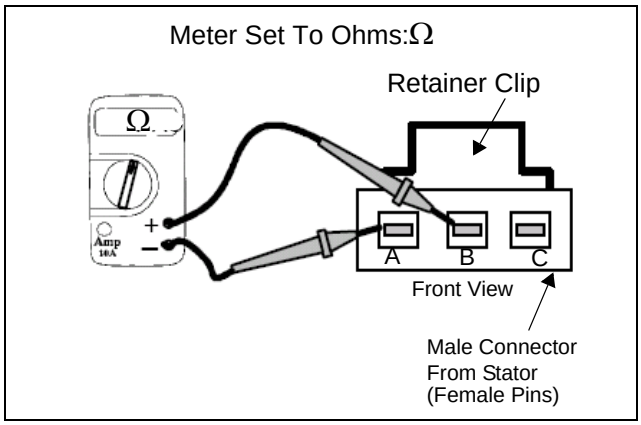

1. Disconnect the 3 pin connector from stator.
2. Set DMM to OHMs scale.

NOTE: Make sure DMM leads are plugged into correct jacks.

3. Connect one lead of DMM to any one of pins in multi-connector leading from stator.
4. Connect other lead of DMM to any one of the other two pins in the multi-connector and observe circuit resistance reading.

Specification:
Stator Resistance:
0.1-0.5 Ω (plus meter resistance, see below)

NOTICE
Do not touch meter leads or reading obtained will be inaccurate.

NOTE: 0.3Ω to 0.5Ω ohms may be less than the internal resistance of your meter leads or meter. Before measuring stator resistance, connect the meter leads together and read the display and record this measurement. Subtract this reading from stator resistance readings.

EXAMPLE: Connect meter leads together, meter reads 0.3 ohms. Measure stator resistance, meter reads .7 ohms. Subtract 0.3 ohms (meter/lead resistance) from .7 ohms.
True reading is:
.7 ohms (observed reading when checking stator)
- 0.3 ohms (meter/lead resistance)
= 0.4 ohms (true stator winding resistance)

5. Remove one of the DMM leads and connect it to the other pin in the multi-connector. The reading should be the same as the first test reading.
6. Remove the lead that was connected to the same multi-connector pin for the first two tests and connect it to the other multi-connector pin. This reading should also be the same as the first two readings.

STATOR WINDINGS TO GROUND INSPECTION

NOTE: DMM set to resistance. Engine OFF and cooled. Disconnect the stator (3-pin connector).

1. Connect one DMM lead to one of the multi-connector pins and place the other lead of the DMM in contact with a good engine ground, observe resistance to ground reading.

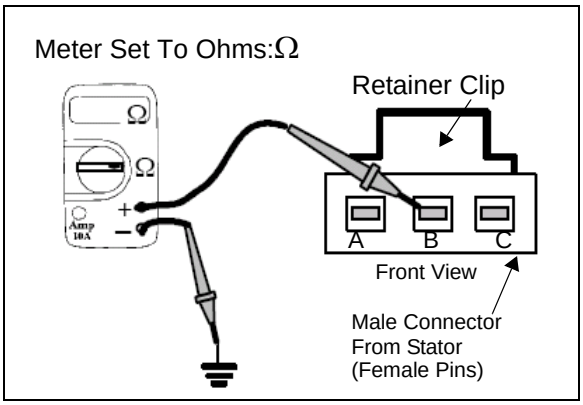

Specification: Stator Windings to Ground:
Open Circuit (OL)

2. Repeat test for other two stator leads to ground.
3. There should be no connection from stator windings to ground.

© 2009 Polaris Sales Inc.

VOLTAGE DROP: RECTIFIER / REGULATOR TO BATTERY(+)

NOTE: Leave regulator / rectifier connected for this test.

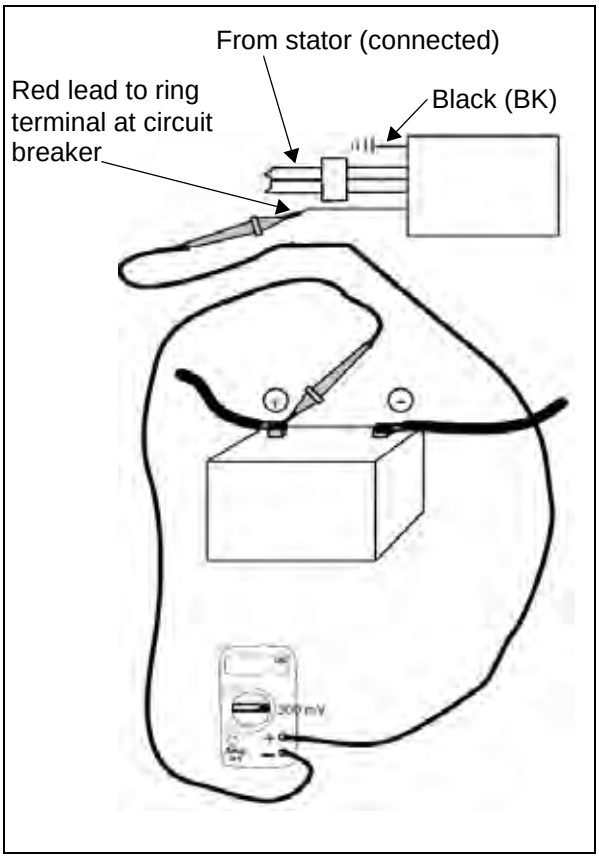

1. Remove the electrical cover (below the oil cooler).
2. Set Digital Multi-Meter (DMM) to DC Volts scale (or 300 mV scale).
3. Connect red lead (+) of DMM to the ring terminal of the Red regulator / rectifier lead at the circuit breaker.
4. Connect black lead (-) of DMM to positive (+) battery cable at battery.
5. DMM must read below 0.1 volts DC (100 mV). If it does read 0.1 V DC or less the circuit is O.K.

Specification: 0.1 V DC

6. If DMM reads above 0.1 volts DC there is excessive resistance in the circuit that must be corrected.
7. Possible problem areas could be the battery cable, cable end connections, cable to battery terminal connection, the ring terminal connection to the regulator rectifier red wire. Visual inspections or continued voltage drop inspections are necessary to determine the cause.

RECTIFIER / REGULATOR CONNECTOR INSPECTION

1. Disconnect 3 pin connector.

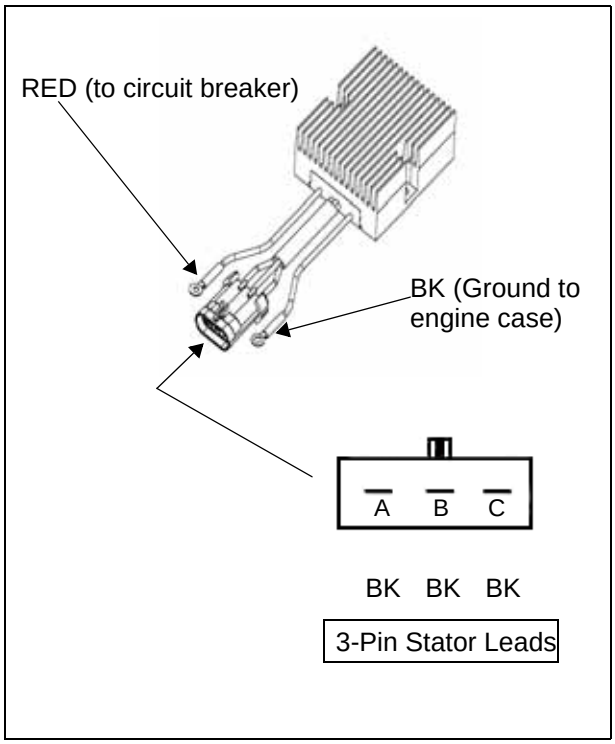

2. Inspect male and female pins in the 3-pin connector and the ring terminals of the positive (red) and negative (black) regulator / rectifier leads. Check for corrosion, loose pins, poor connections, or evidence of overheating or other damage.
3. If the wiring and connectors are undamaged and appear to be clean and tight, inspect the battery, stator, and related wiring. Test the regulator / rectifier as described in the following tests.

NOTE: Do not touch the meter leads when testing the regulator rectifier. Readings in the following chart are correct for a Fluke™ 73 multimeter. Use of other meters may affect test results.

© 2009 Polaris Sales Inc.

DIODE LEAKAGE TEST

NOTE: Engine must be OFF. Perform this test at the 40A circuit breaker (under the electrical cover below the oil cooler).

NOTE: Do not touch the meter leads when testing the regulator rectifier. Readings in the following chart are correct for a Fluke™ 73 multimeter. Use of other meters may invalidate the test.

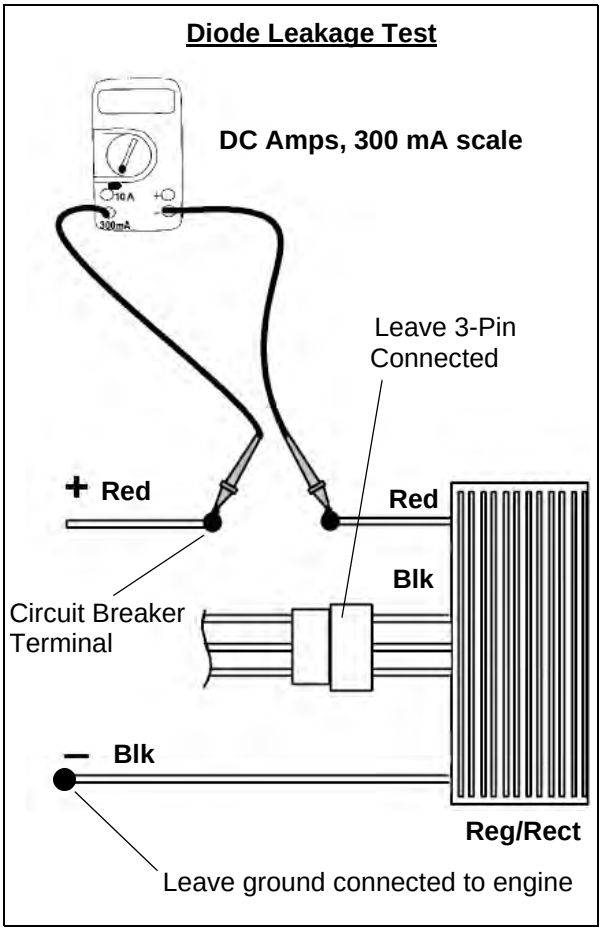

1. Disconnect the voltage regulator / rectifier red wire from the circuit breaker terminal, reinstall the nut on the circuit breaker.
2. Install a jumper wire as shown to provide a complete ground path.
3. Connect meter as shown, with red (+) meter lead to the red wire on harness side, and the black meter lead to the red wire on the regulator / rectifier side.
4. Compare leakage to specification below.

Specification:
Leakage: Less than 1.0 mA

© 2009 Polaris Sales Inc.

REGULATOR / RECTIFIER TEST

- Remove regulator / rectifier or completely disconnect all wires (3-Pin stator connector, ground (black) from engine case, and BK/R wire from circuit breaker (inside) terminal). Unit must be cool for accurate testing.
- Use **DIODE CHECK** function on the Fluke 73 DMM
- Perform all tests described in test table below. Test results describe a properly functioning part.

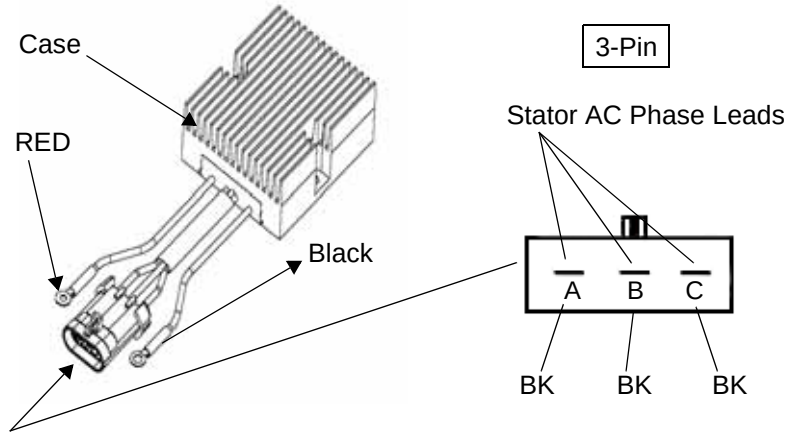

Regulator / Rectifier Test Table - Set DMM to *DIODE CHECK* Function

DMM RED LEAD	DMM BLACK LEAD	RESULT
AC Phase 1 (Pin A of 3-pin)	AC Phase 2 (Pin B of 3-pin)	Open Circuit
AC Phase 2 (Pin B of 3-pin)	AC Phase 3 (Pin C of 3-pin)	Open Circuit
AC Phase 1 (Pin A of 3-pin)	AC Phase 3 (Pin C of 3-pin)	Open Circuit
AC Phase 2 (Pin B of 3-pin)	AC Phase 1 (Pin A of 3-pin)	Open Circuit
AC Phase 3 (Pin C of 3-pin)	AC Phase 1 (Pin A of 3-pin)	Open Circuit
AC Phase 3 (Pin C of 3-pin)	AC Phase 2 (Pin B of 3-pin)	Open Circuit
Battery + Lead (Ring terminal of Red wire)	Ground Lead (Ring terminal of Black wire)	Open Circuit
Ground Lead (Ring terminal of Black wire)	Battery + Lead (Ring terminal of Red wire)	Open Circuit
Ground Lead (Ring terminal of Black wire)	Case	Closed Circuit (continuity)
Ground Lead (Ring terminal of Black wire)	Any Phase	Open Circuit
Any Phase	Ground Lead (Ring terminal of Black wire)	Open Circuit
Battery + Lead (Ring terminal of Red wire)	Any Phase	Open Circuit
AC Phase 1 (Pin A of 3-pin)	Battery + Lead (Ring terminal of Red wire)	400mV to 650mV
AC Phase 2 (Pin B of 3-pin)	Battery + Lead (Ring terminal of Red wire)	400mV to 650mV
AC Phase 3 (Pin C of 3-pin)	Battery + Lead (Ring terminal of Red wire)	400mV to 650mV

© 2009 Polaris Sales Inc.

RECTIFIER / REGULATOR REPLACEMENT

1. Remove electrical cover (page 16.5).
2. Lift cover off circuit breaker (A) and remove engine ground screw.

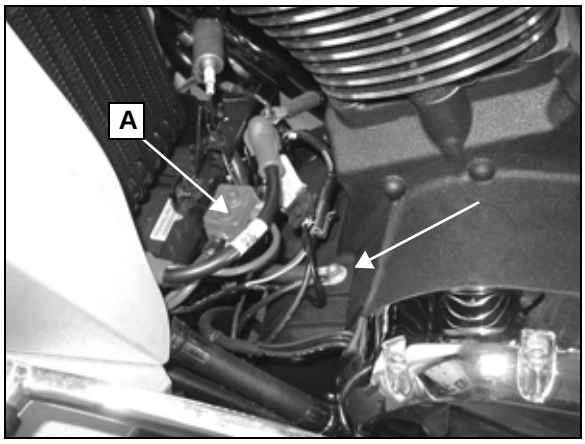

3. Remove regulator / rectifier ground wire (black) (B).
4. Remove nut securing regulator rectifier black/red (+) wire to the inner circuit breaker terminal. INSTALLATION NOTE: This wire is installed first on the breaker terminal, followed by the battery positive (+) red wire (D),

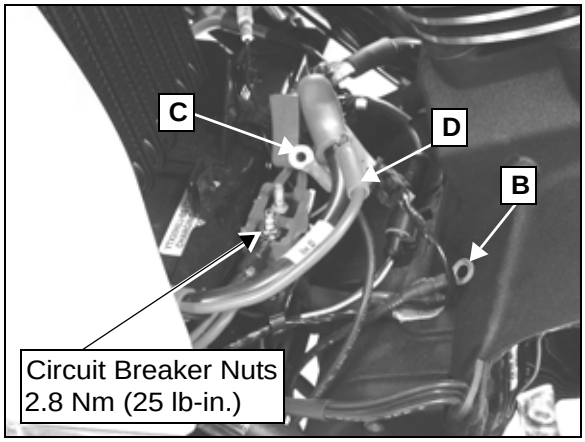

5. Remove mounting screws.
6. Lift tab and separate the 3-pin connector.
7. Reverse order of removal to install. Be sure mounting bracket is clean and all connections are clean and tight. Secure wires and connectors, and torque all screws.
8. Torque circuit breaker nuts to 2.8 Nm (25 lb-in).

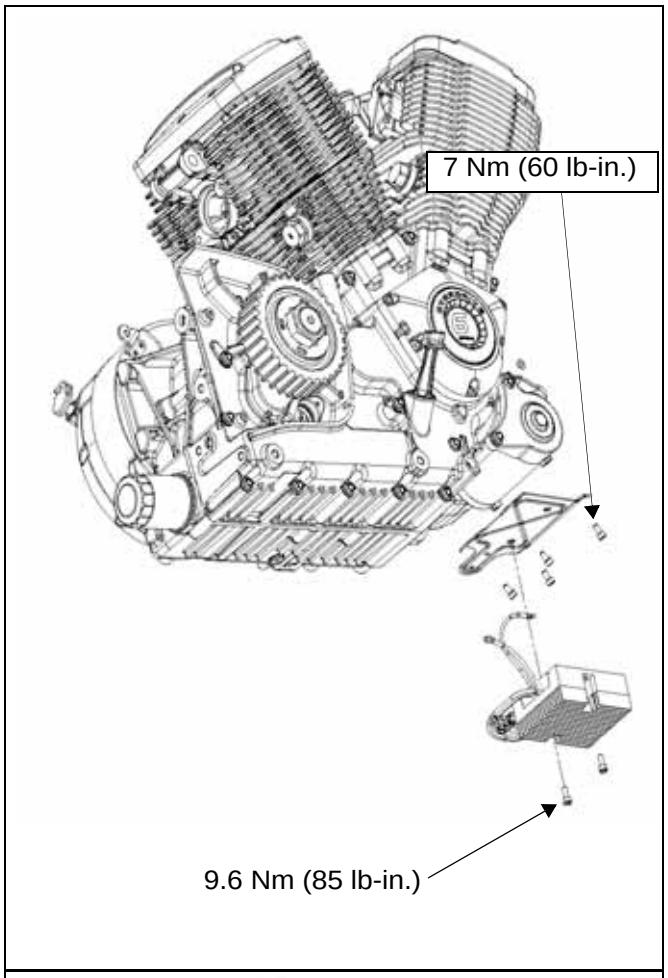

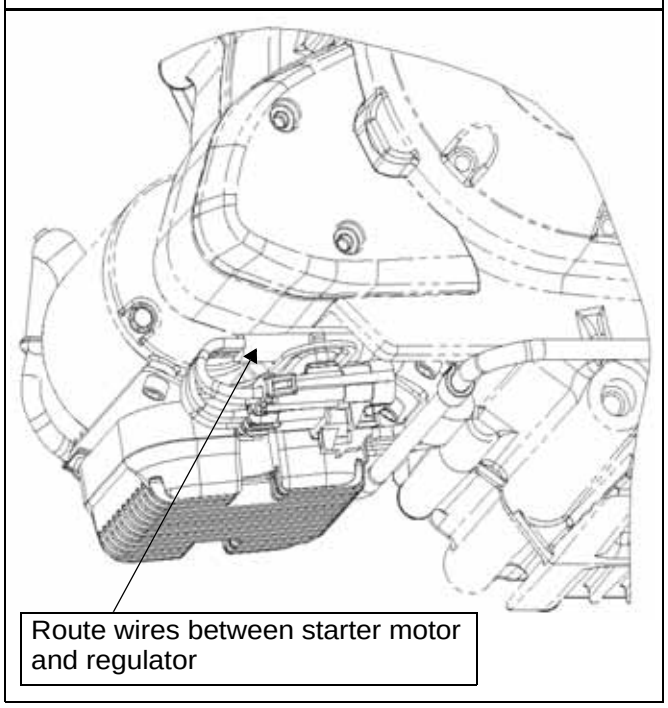

© 2009 Polaris Sales Inc.

STATOR REMOVAL

1. Remove primary cover (page 9.11).
2. Place primary cover on bench with padded material between primary cover and bench top.
3. Remove wiring retainer plate (A).
4. Remove three (3) socket head screws (B).
5. Remove stator from primary cover.

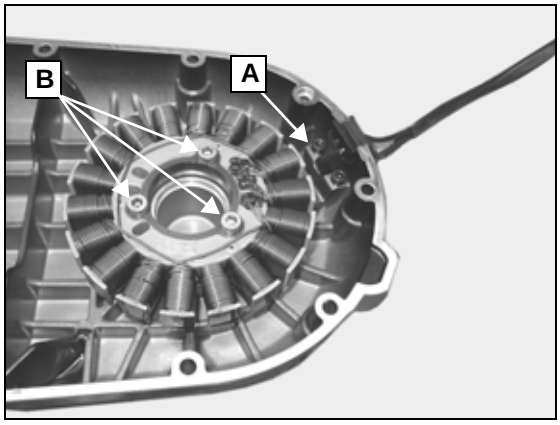

STATOR INSTALLATION

1. Clean stator mounting surface and screw holes in primary cover.
2. Place stator in primary cover taking care to route wires correctly in the channel.
3. Install screws and torque 12 Nm (100 lb-in).
4. Install grommet (C) into groove in cover and then install retainer plate. Torque screws to 5.7 Nm (50 lb-in).
5. Pull wires to remove any slack or loop at point (D). Wires must not protrude into flywheel rotor area.
6. Install primary cover (page 9.14).

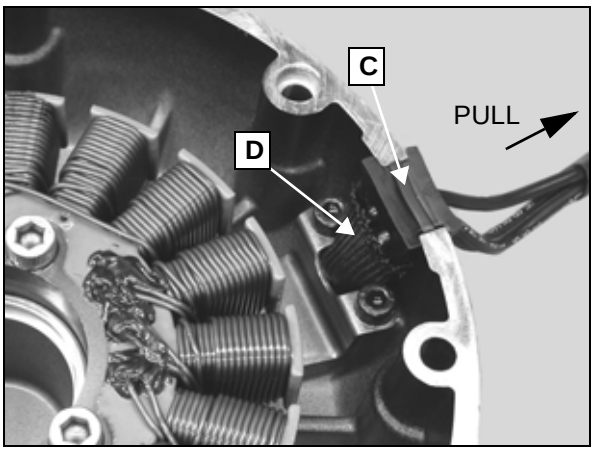

FLYWHEEL REMOVAL

Refer to page 9.26.

© 2009 Polaris Sales Inc.

NOTES

© 2009 Polaris Sales Inc.

CHAPTER 17
IGNITION

GENERAL INFORMATION 17.2
SAFETY INFORMATION 17.2
IGNITION SYSTEM SPECIFICATIONS 17.2
TORQUE SPECIFICATIONS 17.3
SPECIAL TOOLS 17.3
TROUBLESHOOTING 17.3
BASICS 17.3
IGNITION CIRCUIT DIAGRAM 17.4
TEST LEAD ADAPTER KIT 17.5
ECM CONNECTOR MAP 17.5
IGNITION SYSTEM TEST FLOWCHART 17.6
BATTERY VOLTAGE INSPECTION - TEST 1 . . . . . 17.7
SPARK INSPECTION - TEST 2 . . . . . 17.7
COIL HIGH TENSION LEADS - TEST 3 . . . . . 17.8
IGNITION COIL SIGNAL - TEST 4 . . . . . 17.8
IGNITION COIL RESISTANCE - TEST 5 . . . . . 17.9
CRANKSHAFT POSITION SENSOR (CPS) RESISTANCE INSPECTION - TEST 6 . 17.10
CRANK POSITION SENSOR CIRCUIT AND SIGNAL TEST 6A 17.11
CRANK POSITION SENSOR CIRCUIT CONTINUITY TEST 6B 17.11
GROUND CIRCUIT INSPECTION - TEST 7 . . . . . 17.11
IGNITION COIL 17.12
IGNITION COIL REMOVAL 17.12
IGNITION COIL INSTALLATION 17.12
IGNITION SWITCH REMOVAL / CLEARANCE ADJUSTMENT 17.13

© 2009 Polaris Sales Inc.

GENERAL INFORMATION

SAFETY INFORMATION

There are many hazards present when working on or around the ignition system. Read and pay close attention to the following warnings and cautions when working on any component in this section.

⚠WARNING

Never run an engine in an enclosed area. Exhaust contains poisonous carbon monoxide gas that can cause loss of consciousness and may lead to death. If you must run the engine to do some repairs, do so in an open area or with an exhaust evacuation system operating.

⚠WARNING

The engine and exhaust system become very hot during operation and remain hot for a period of time after the engine is shut off. Wear insulated protection for hands and arms or wait until the engine and exhaust system have cooled before working on the machine.

⚠CAUTION

Some procedures call for the engine to be run in order to warm the engine to operating temperature. If this is done the exhaust pipes can “blue" if a cooling air stream is not provided by means of a shop fan directed at the exhaust system (particularly the head pipes).

⚠CAUTION

Parts containing semi-conductors can be easily damaged if handled carelessly. Do not drop or subject the electronic components to shock loads.

⚠CAUTION

Follow the instructions closely when troubleshooting items in this section. Some electrical components can be damaged if they are connected or discon--nected while the ignition switch is ON and current is present.

⚠CAUTION

Using incorrect heat range spark plugs can damage the engine. Always follow the manufacturer's recommendations for spark plug heat range.

GENERAL CAUTIONS TO OBSERVE WHEN WORKING ON IGNITION SYSTEM

- This ignition system is controlled electronically and no provisions are available to inspect or change ignition timing. A timing light is still valuable as a diagnostic tool.
- Poor connections are the most common cause of ignition problems. Inspect all connections and replace the spark plugs before doing extensive ignition system troubleshooting.
- Make sure the battery is fully charged and that the charging system is operating correctly.
- A signal from the Crankshaft Position Sensor must be present for spark to occur.

IGNITION SYSTEM SPECIFICATIONS

Ignition Specifications		
Item		**Specifications**
Spark Plug		NGK DCPR6E
Spark Plug Gap		0.8 mm (.032 in.)
Ignition Coil Resistance	Primary	0.3 - 0.6 Ohms ± 20%
	Secondary	See coil test page 17.9
	Plug Wire (with cap*)	2009: Front: 1500 - 2000 Ohms** / Rear 400 - 600 Ohms**
		2010: Front: 4360 - 5780 Ohms** / Rear 4080 - 5050 Ohms**
Crank Position Sensor Resistance		280 Ohms ± 10% (No short to ground)
** Spark plug end caps are not removable*	*** See page 17.8 for test procedure*	

© 2009 Polaris Sales Inc.

TORQUE SPECIFICATIONS

Fastener Torque Specifications - Ignition System			
Description	**Torque Nm**	**Torque lb-ft (in-lb)**	**Notes**
CPS Screws (to cover)	6.8 Nm	(60 lb-in)	
Ignition Coil to Frame	11 Nm	(100 lb-in)	
Spark Plug	11 Nm	(100 lb-in)	Apply Anti-Seize
Timing Wheel Bolt (on RH end of crankshaft)	28 Nm	17 lb-ft	
Rotor (Flywheel) Bolt	102 Nm	75 lb-ft	

SPECIAL TOOLS

SPECIAL TOOL	PART NUMBER
Connector Test Lead Adapter Kit	PV-43526
Fluke 73™ Digital Multimeter	PV-43546
Inductive Timing Light	PV-43537

TROUBLESHOOTING

BASICS

Before troubleshooting the ignition system, ensure that the engine stop switch is in the run position, that the battery is fully charged, and that system related fuses are not open (blown). Check visually for corroded, loose, or broken connections in critical areas such as the sensor connector itself, or at the engine-to-chassis harness 14 pin connector. Check for loose wire pins in the individual sensor connectors and at the ECM (under the seat).

The Ignition System Troubleshooting flow chart (and the accompanying text) is designed to help you troubleshoot ignition system problems. It will not lead you to faulty or fouled spark plugs. Always inspect spark plug condition **first** (and replace if necessary) when troubleshooting ignition system problems.

Be sure that the spark plugs are the correct heat range and are the specified resistor spark plugs. Non-resistor spark plugs can introduce electrical problems due to increased Radio Frequency Interference (RFI).

WARNING

Extremely high voltage is present in the ignition system. Do not touch the ignition coil, wires or spark plugs during test procedures.

© 2009 Polaris Sales Inc.

IGNITION CIRCUIT DIAGRAM

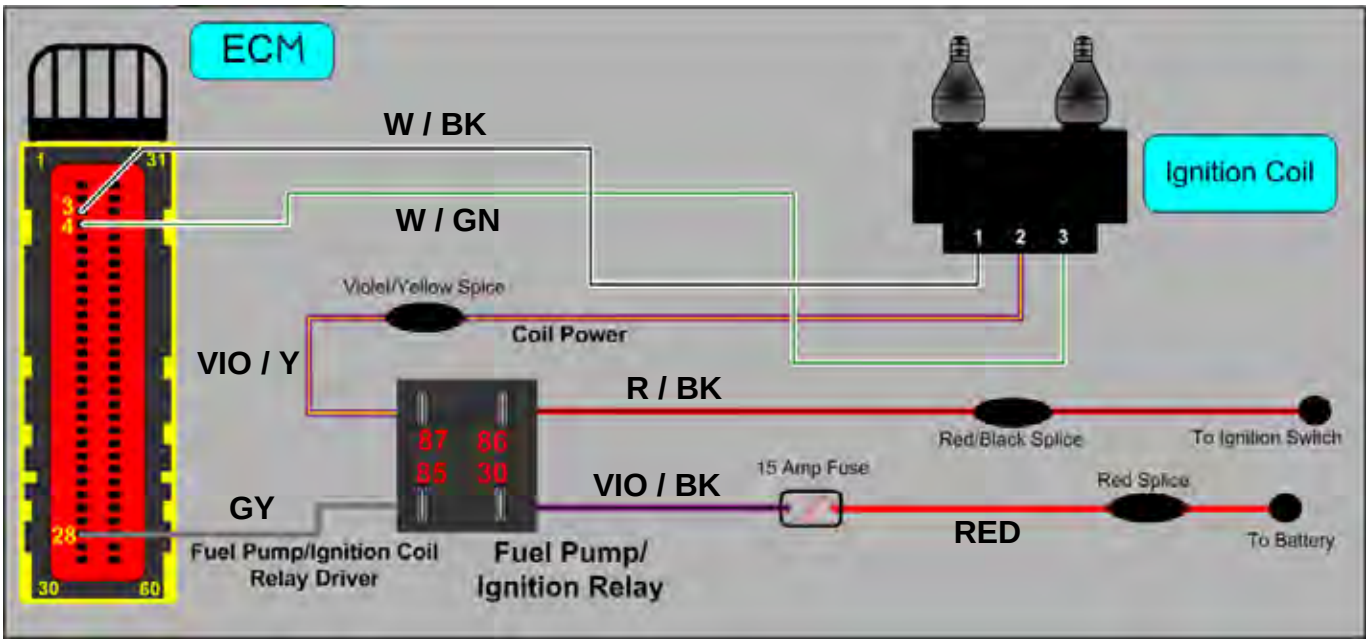

© 2009 Polaris Sales Inc.

TEST LEAD ADAPTER KIT

1. Tests in this section may include the testing of voltage and / or resistance at the connectors for various sensor and system components. Use the appropriate test adapter lead when performing these tests at connector pin(s).
2. Forcing an incorrect or oversized probe into a connector may cause inaccurate test results (due to lack of a solid mechanical connection to the terminal). It can also damage the connector being probed or the connector housing, creating another problem which greatly complicates the diagnostic process. Extreme care must be taken not to introduce problems while probing a connector.

Test Lead Adapter Kit: PV-43526 or suitable Fluke test adapter leads

> **CAUTION**
>
> Once the ECM connector has been disconnected, do not touch the pins on the ECM. Static electricity from your body can damage the ECM. Do not attempt to perform tests on the ECM. Tests are done on wiring harness side of ECM connector.

3. The ECM connector is marked 1, 30, 31, and 60 on the wire side of the connector to determine pin location. with 1, 30, 31, and numbers to identify pin terminals. Refer to the diagram below for a description of wire location / function, and wire colors.
4. Use the information on the following pages to perform ignition system related tests at ECM connector or component.

ECM CONNECTOR MAP

Refer to Chapter 5 to remove connector from ECM.

TOP VIEW - ECM CONNECTOR (WIRE SIDE SHOWN)

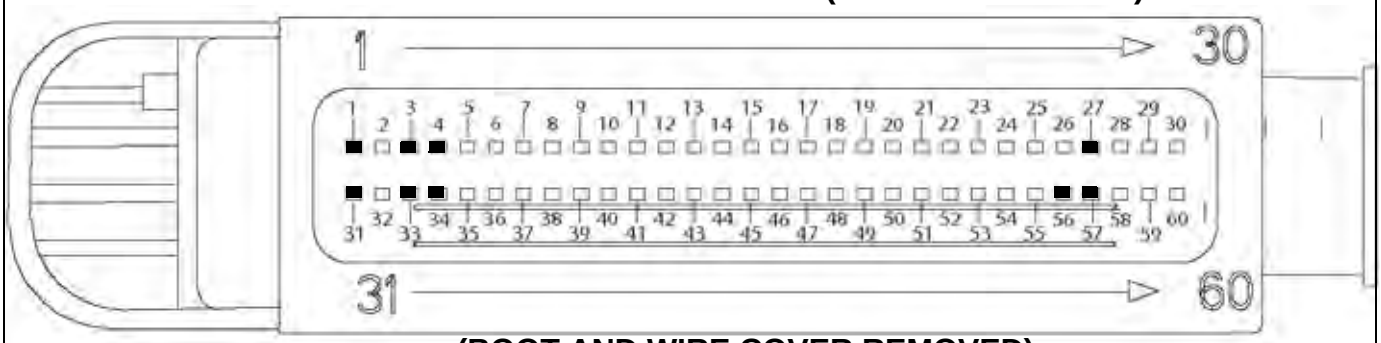

(BOOT AND WIRE COVER REMOVED)

IGNITION RELATED ECM CONNECTOR MAP

System related wire color & pin number shown. Refer to wiring diagram for complete information.

1	2	3	4	5	27	28	29
VIO/PK VPWR	OPEN	W / BK IG COIL SIGNAL (REAR)	W / GN IG COIL SIGNAL (FRONT)	OPEN	OPEN	GY FUEL PUMP RELAY GROUND ECM CONTROLLED	OPEN

BN = Brown; GN = Green; BK = Black; GY = Gray; PK = Pink; R = Red; VIO = Violet; W = White

31	32	33	34	35	56	57	58	59
VIO/PK VPWR	OPEN	BK/W ECM GROUND	R/BK IGN SNS	OPEN	OPEN	R CPS +	BK CPS -	OPEN

VERIFY TERMINAL PINS ARE NOT LOOSE IN CONNECTOR AND WIRE CONNECTION TO TERMINAL PIN IS SECURE. NOTE: CONNECTOR IS MARKED WITH NUMBERS 1, 30, 31, and 60 ONLY.

© 2009 Polaris Sales Inc.

IGNITION SYSTEM TEST FLOWCHART

Before proceeding: 1) Verify battery voltage is at least 12.5 Vdc (Test 1).
2) Check fuel pump fuse (10A) and engine fuse (15A)
3) Turn ignition key and Engine Stop Switch ON and listen for fuel pump. Pump should run for 2-3 seconds at initial power up. If fuel pump does not run, see Chapter 5.

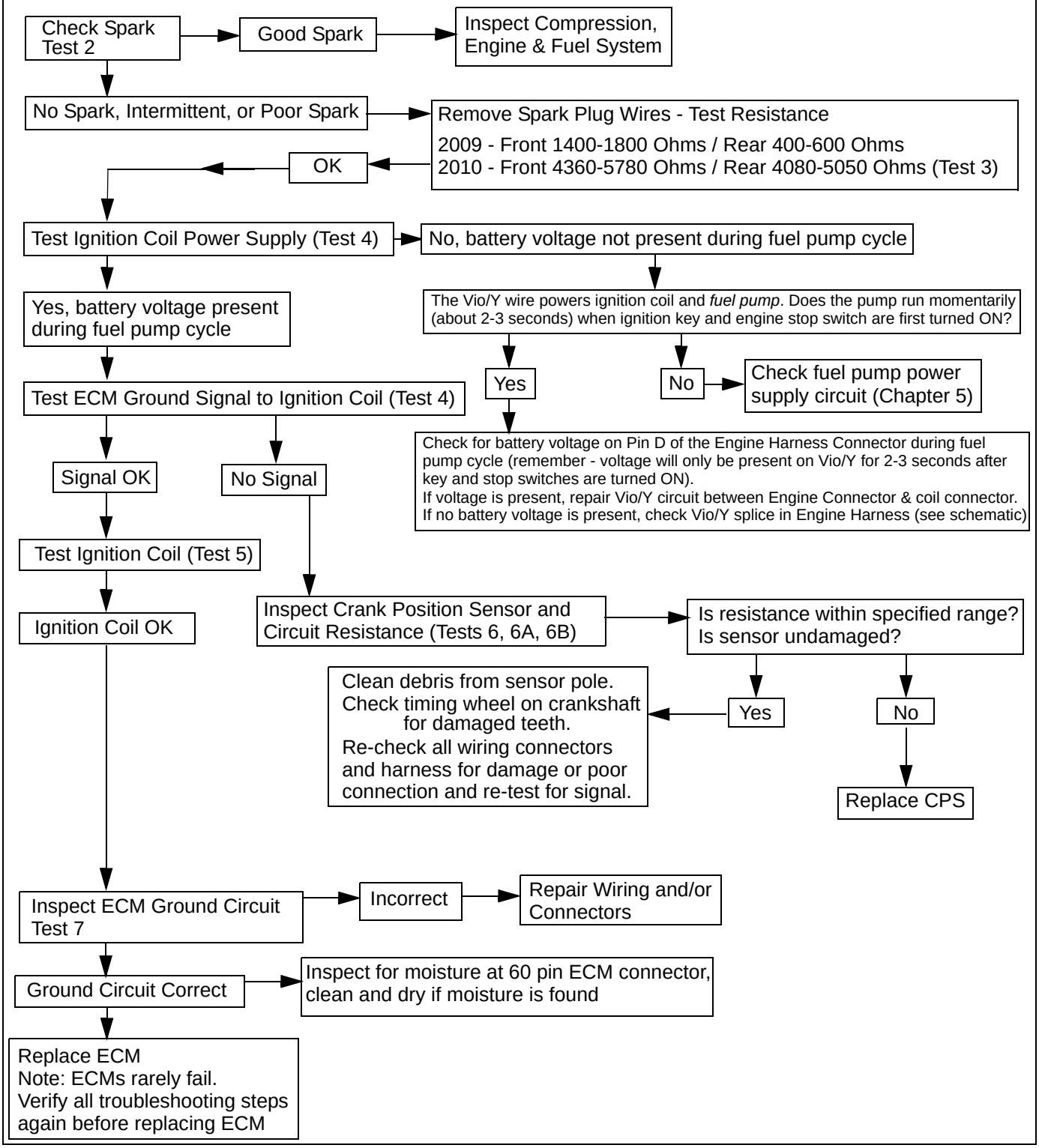

© 2009 Polaris Sales Inc.

BATTERY VOLTAGE INSPECTION - Test 1

1. Access battery area at front of motorcycle.
2. Set Digital Multimeter (DMM) to DC Volts.

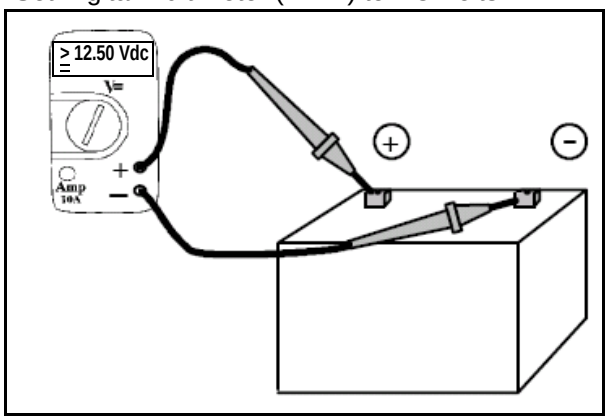

3. Inspect battery voltage.
4. If the battery voltage is below 12.5 Vdc, charge or replace the battery with a fully charged battery. Refer to Chapter 16 for battery inspection, battery charging and charging system inspection.

NOTE: When operating the starter with a low battery, the voltage available for the ignition coils can drop below the minimum required to produce spark.

SPARK INSPECTION - TEST 2

1. Connect an inductive timing light to one spark plug wire.

Inductive timing light PV-33277-A

2. Turn ignition switch and engine stop switch ON.
3. Shift transmission into neutral and pull in clutch lever.
4. Depress starter button and observe timing light.

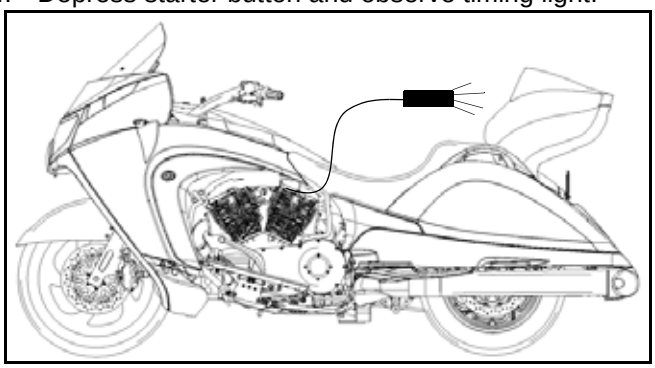

5. Determine if timing light flashes without interruption for both cylinders.
6. Consistent flashes indicate some secondary voltage is present. The likelihood of an ignition related problem is reduced but not eliminated. Keep the following points in mind:
   - There is a threshold voltage and amperage requirement for timing lights below which they will not trigger and therefore, not flash.
   - Fouled spark plugs may drop secondary voltage so low that a timing light will not trigger and therefore, not flash.
   - With no current flowing (open secondary side of the ignition coil) the timing light will not flash.
   - A faulty high tension lead (plug wire) or poor connection is one example of an open secondary.
7. Replace spark plugs, connects plug wires and re-test.
8. If timing light does not flash consistently for one or both cylinders, test high tension leads (Test 3).

NOTE: The plug caps or coil ends are NOT removable. Wire must be replaced as an assembly.

© 2009 Polaris Sales Inc.

COIL HIGH TENSION LEADS - Test 3

CAUTION

Do not attempt to remove the spark plug caps from the spark plug high tension leads. The spark plug caps are molded to the plug wires and are only available as an assembly. The specifications given include the resistance of the spark plug caps.

1. Remove high tension leads (HTL) by pulling firmly on the boots at the coil and spark plug. DO NOT pull on the wire or HTL may be permanently damaged.

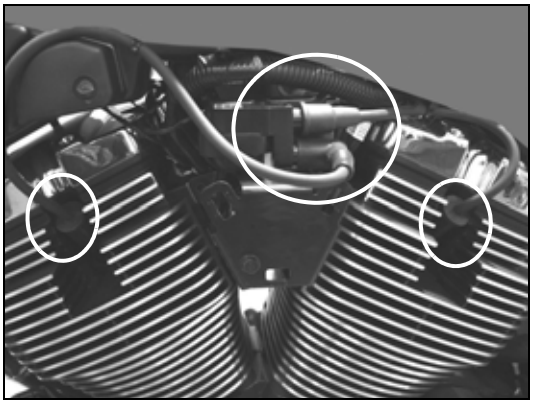

2. Test each high tension lead with an ohmmeter and compare to specification. Move wire to detect internal breaks or poor connections at terminal ends.

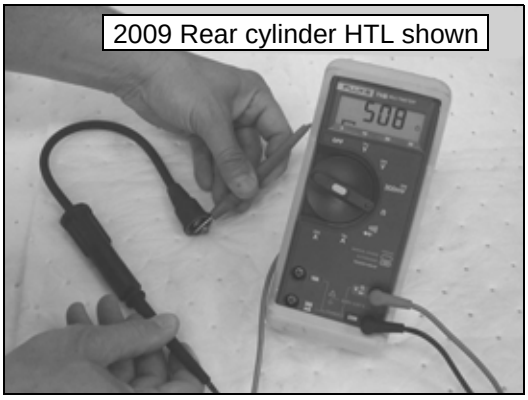

High Tension Lead Resistance

2009 - Front: 1400 - 1800 Ω
2009 - Rear: 400 - 600 Ω

2010 - Front: 4360 - 5780 Ω
2010 - Rear: 4080 - 5050 Ω

IGNITION COIL SIGNAL - Test 4

Power To Ignition Coil

Battery voltage must be present at the ignition coil during fuel pump initial cycle, during cranking, and with the engine running.

1. Remove ignition switch cover (Chapter 3).
2. Remove ignition coil harness connector from the back of the coil by pressing tab (A) and gently pulling the harness connector to remove.

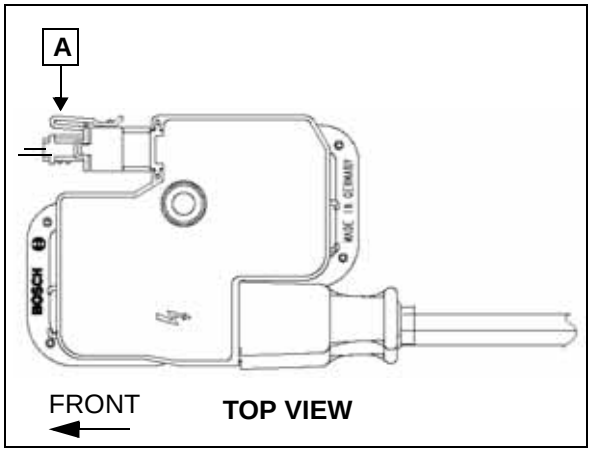

3. Place the DMM selector dial on the ***Volts DC*** scale.
4. Connect the black lead to ground (on the engine).
5. Connect a small thin test adapter lead to the center terminal of the ignition coil primary connector and the + meter lead to the test adapter.

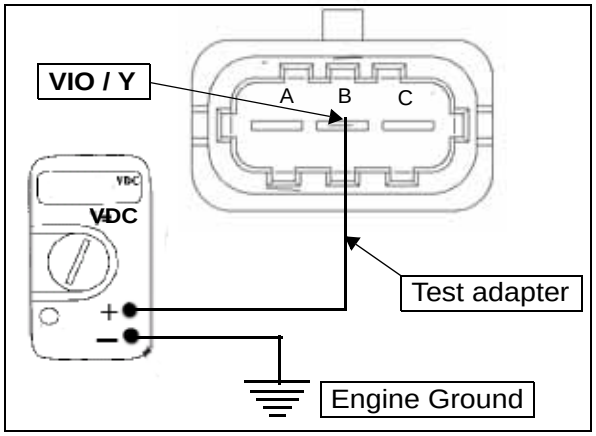

6. With engine stop switch OFF, turn the ignition key ON.
7. Turn the engine stop switch to RUN. Battery voltage should appear on the center terminal (VIO / Y) for 2-3 seconds until the pump completes its prime cycle.
8. With transmission in Neutral, crank the engine. Battery voltage should again be present on the center (VIO / Y) wire terminal.

© 2009 Polaris Sales Inc.

Test 4 (Cont.)

ECM (Ground) Signal To Ignition Coil

ECM ground signal must be present at each of the outer terminals of the ignition coil primary harness connector. The signal will appear as a pulse on the meter bar graph with DMM selector in the OHMs position.

1. Place the DMM selector dial on the ***OHMS*** scale.
2. Place a small thin test adapter into one of the outer terminals of the ignition coil primary connector (either the W/BK or W/GN) and connect one meter lead to the test adapter.

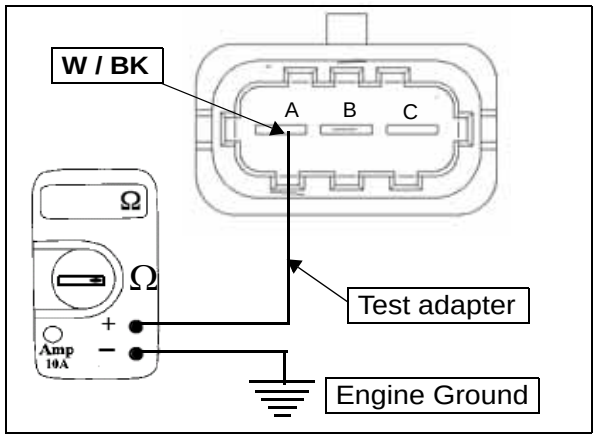

3. Ground the other lead to the engine.
4. Place transmission in Neutral.
5. Turn the ignition key and engine stop switch ON.
6. Crank the engine with the electric starter and watch the bar graph on the Fluke 73 DMM. The bar graph should pulse evenly while engine is cranking, indicating a ground signal is present.

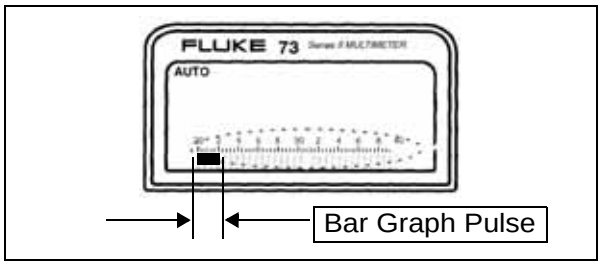

7. Repeat the test on the other outside wire in the connector.
   - If no pulse is present, test the Crankshaft Position Sensor (Test 6).
   - If the signal is present on one wire and not the other, test related wiring and connections.
   - If both signals are present and there was battery voltage on the VIO/Y wire (center terminal) but still no spark, test the ignition coil windings. (Test 5).

IGNITION COIL RESISTANCE - Test 5

Ignition Coil Primary Winding

1. Remove ignition coil (page 17.12).
2. Select OHMS function on the DMM.
3. Measure resistance between terminal 3 and terminal 2 on the coil. Compare to specification.
4. Measure resistance between terminal 1 and terminal 2 on the coil. Compare to specification.

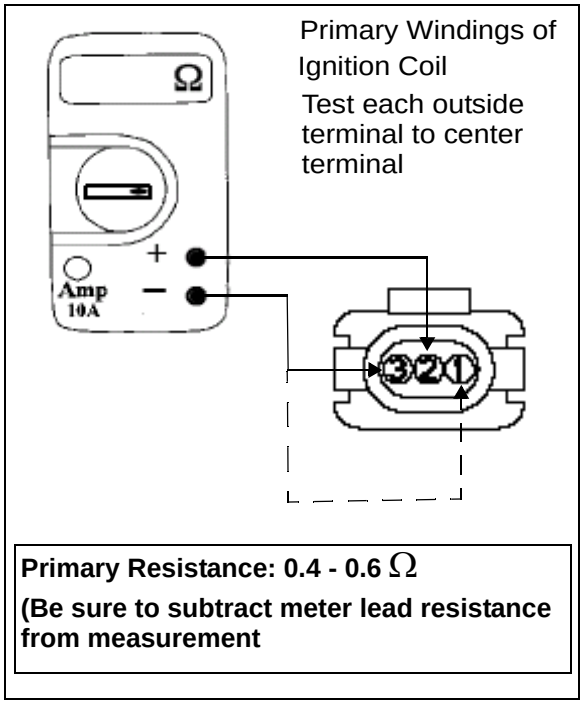

Ignition Coil Secondary Windings

1. Remove ignition coil (page 17.12).
2. Select DIODE CHECK function on the DMM.
3. Place red DMM lead on center terminal (#2) of coil primary and black lead on secondary terminal and record.
4. Move black DMM lead to the other secondary terminal and record. (Reading should be the same for both secondary windings).

(Cont.)

© 2009 Polaris Sales Inc.

Ignition Coil Secondary Windings (Cont.)

5. Repeat measurements on each secondary coil with meter leads reversed.
6. Compare readings to specification. Resistance should be low with leads one way and OL with leads reversed.

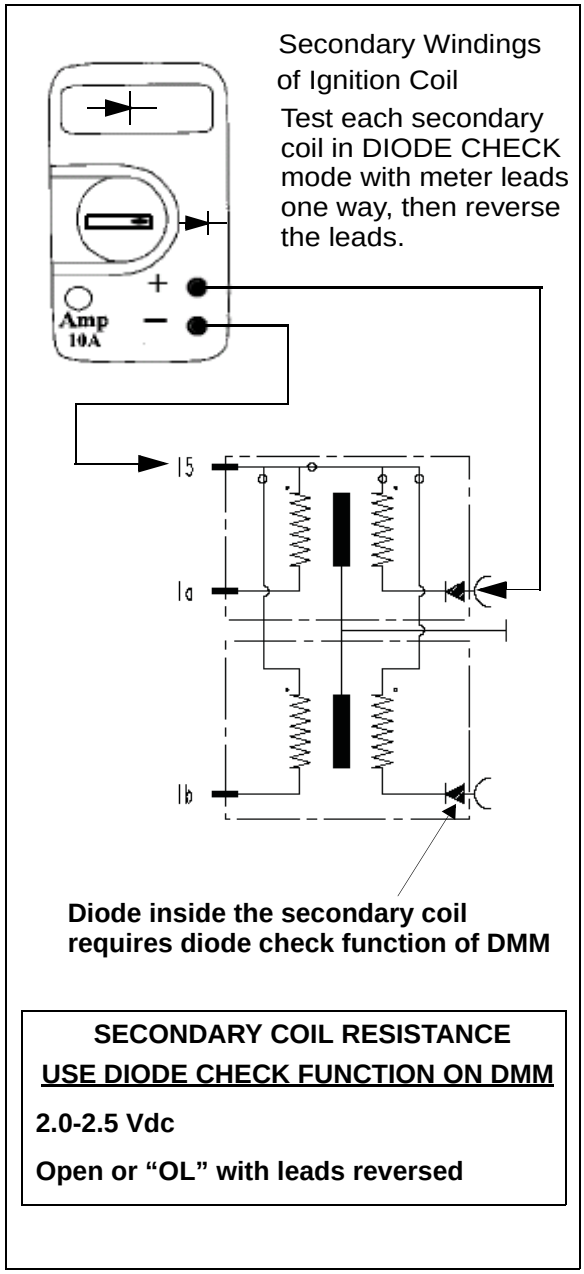

SECONDARY COIL RESISTANCE

USE DIODE CHECK FUNCTION ON DMM

2.0-2.5 Vdc

Open or "OL" with leads reversed

CRANKSHAFT POSITION SENSOR (CPS) RESISTANCE INSPECTION - Test 6

NOTE: This test can also be performed at the ECM connector, to test the entire circuit with the sensor. See test 6A (page 17.11).

1. Disconnect the CPS sensor (connector is located at rear of engine).
2. Visually inspect the sensor wire harness for damage, and loose or broken wires or connector pins.
3. Select OHMS function on the DMM.
4. Measure resistance through the CPS coil by connecting a test adapter lead to the sensor wires and to the meter leads.

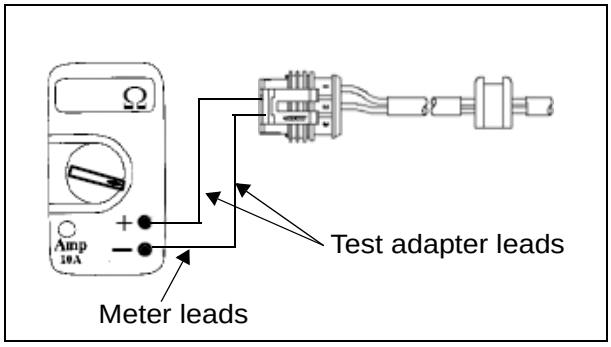

Specification: 280Ω @ 20°C, 68°F (+/- 20%)

5. Remove the lower right engine cover.
6. Visually inspect center pole (A) of crankshaft position sensor for damage or metal particles clinging to the magnet. Be sure dowel pins (B) are in place on the cover (or crankcase) and check for physical damage to sensor or timing wheel that may affect air gap.

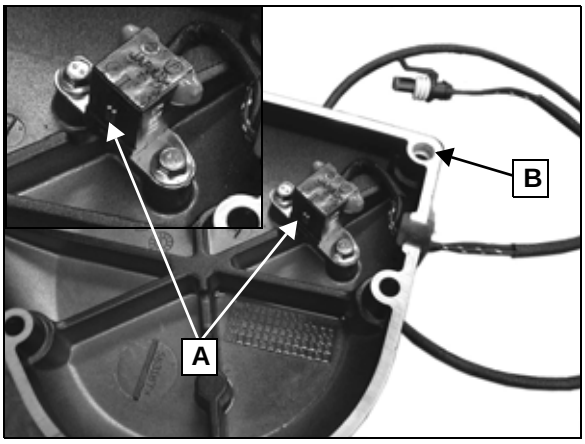

© 2009 Polaris Sales Inc.

CRANK POSITION SENSOR CIRCUIT and SIGNAL Test 6A

NOTE: A test lead adapter kit is required to prevent connector pin, socket, or case damage.

Connector Test Lead Adapter Kit PV-43526 or suitable Fluke test adapter leads

1. Turn ignition key OFF.
2. Remove seat.
3. Remove ECM connector from ECM (Chapter 5).
4. Select OHMS function on the DMM (Ω).
5. Connect test adapter leads to the DMM leads.
6. Place one test adapter lead in pin 57 and the other in pin 58 of the ECM connector (not the ECM). Compare resistance to specification.

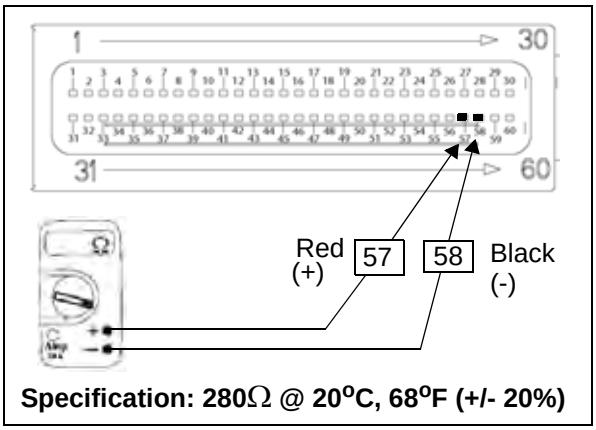

Specification: 280Ω @ 20°C, 68°F (+/- 20%)

CPS AC Signal Test

7. With leads connected as for the resistance test (pin 57 and 58 of the ECM connector), select Volts AC function on the DMM.
8. Turn engine over with electric starter and observe DMM display.
9. With spark plugs installed voltage reading will be erratic due to low rpm and pulsing nature of the signal. The numerical display will be erratic. Watch bar (A) at bottom of display to determine if a signal exists. Any fluctuating AC signal is correct for this test.

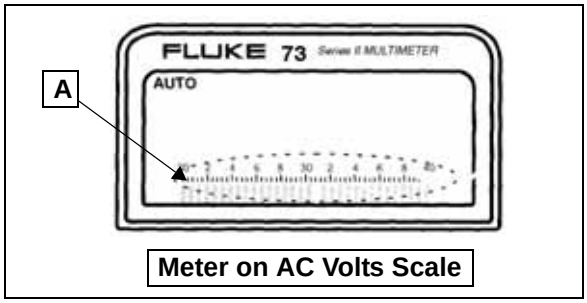

10. Remove spark plugs from engine. Install spark plugs into spark plug caps and ground the spark plug electrodes securely to the engine.
11. Measure AC voltage signal from crank position sensor while turning engine over using electric starter with spark plugs out and compare to specification.

Specification: 2-5 V AC (Spark Plugs Out)

CRANK POSITION SENSOR CIRCUIT CONTINUITY Test 6B

1. Check all pin connectors between sensor and ECM for a good mechanical connection.
2. Inspect wiring for damage causing an open circuit.

GROUND CIRCUIT INSPECTION - Test 7

1. Set DMM to DC volts.
2. Connect red meter lead to positive (+) post of battery.
3. Connect black meter lead to several bare metal places on frame, engine and wiring harness ground connections while observing meter reading at each.
4. At each ground test point, meter should read battery voltage.
5. Low or reduced voltage indicates resistance. Corrosion, paint, loose or damaged connections, or broken wires can cause ground problems.
6. Clean battery terminals thoroughly and apply a thin coat of dielectric grease. The battery ground cable is attached to the engine at the left front corner of crankcase (under the cover with the starter solenoid and circuit breaker).
7. Set DMM to measure resistance. Test for good continuity between the engine crankcase ground and the chassis grounds. The main chassis grounds are located on the top left fairing shell mounting bolt (B).

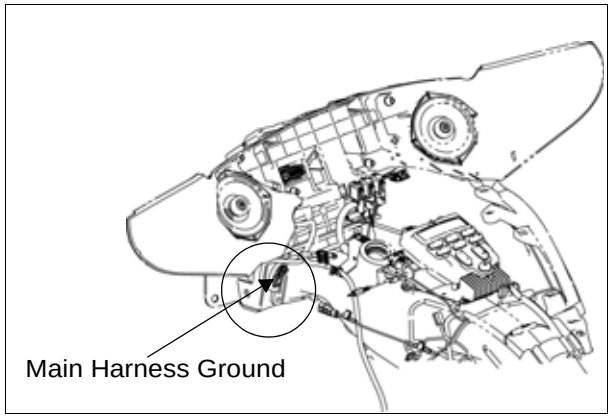

© 2009 Polaris Sales Inc.

IGNITION COIL

IGNITION COIL REMOVAL

1. Turn ignition switch OFF and remove key.
2. Remove ignition coil cover (Item A - Chapter 3).
3. Remove both high tension leads (B) from coil.

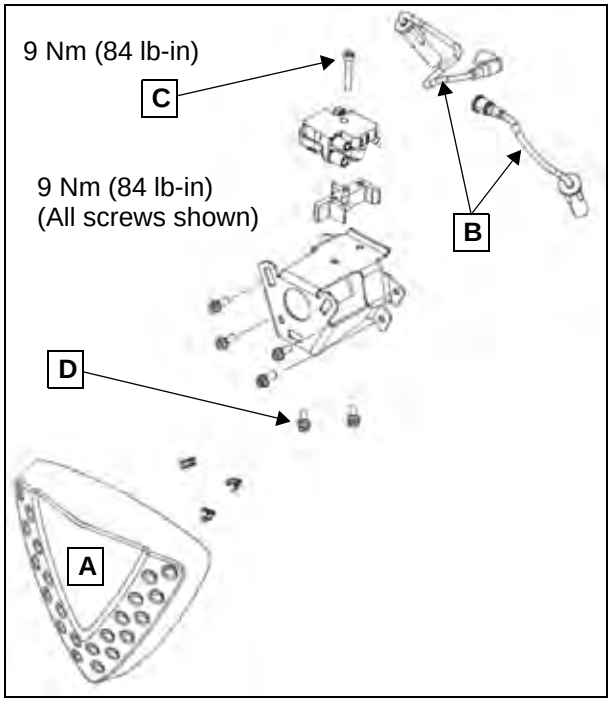

4. Remove screw (C) and ignition coil. To remove coil with bracket, remove 2 screws (D).
5. Press tab (E) to remove primary connector.

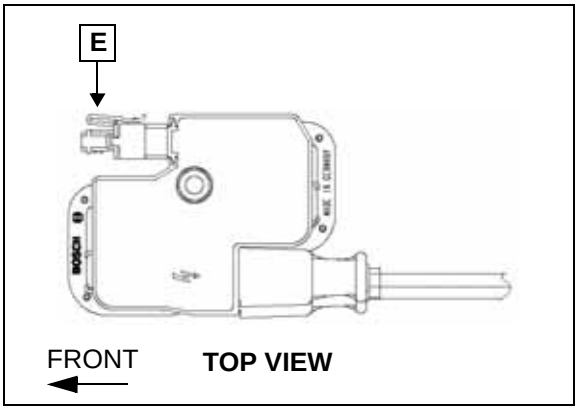

6. Remove ignition coil.

IGNITION COIL INSTALLATION

1. Installation procedure is the reverse of removal procedures.
2. Apply light film of dielectric grease inside the spark plug boot of high tension leads.
3. Torque coil mount screw (or screws if coil was removed with bracket attached) to 9 Nm (84 lb-in).

© 2009 Polaris Sales Inc.

IGNITION SWITCH REMOVAL / CLEARANCE ADJUSTMENT

1. Turn ignition switch OFF and remove key.
2. Remove bridge console (Chapter 3).
3. Lift glove compartment lock cable out of ignition switch bracket. Disconnect inner cable from release arm by carefully rotating cable to align inner cable wire with slot in the release arm and remove.
4. Lift fuel door lock cable out of ignition switch bracket (Photo 1) and disconnect at panel (B) if required.
5. Rotate fuel door cable to align inner cable wire with slot, slide down to remove cable.
6. Remove switch mounting screws (B).
7. Press the tab on ignition switch harness connector firmly and pull to disconnect switch wire harness from switch.
8. **INSTALLATION NOTES:** After tightening switch screws, verify clearance between steering stop and switch body as shown in detail view below. Some 2008 models require a support shim under the ignition switch base. The shim MUST be re-installed unless the ignition switch is replaced. Refer to Safety Recall Bulletin V-08-01 for more information.

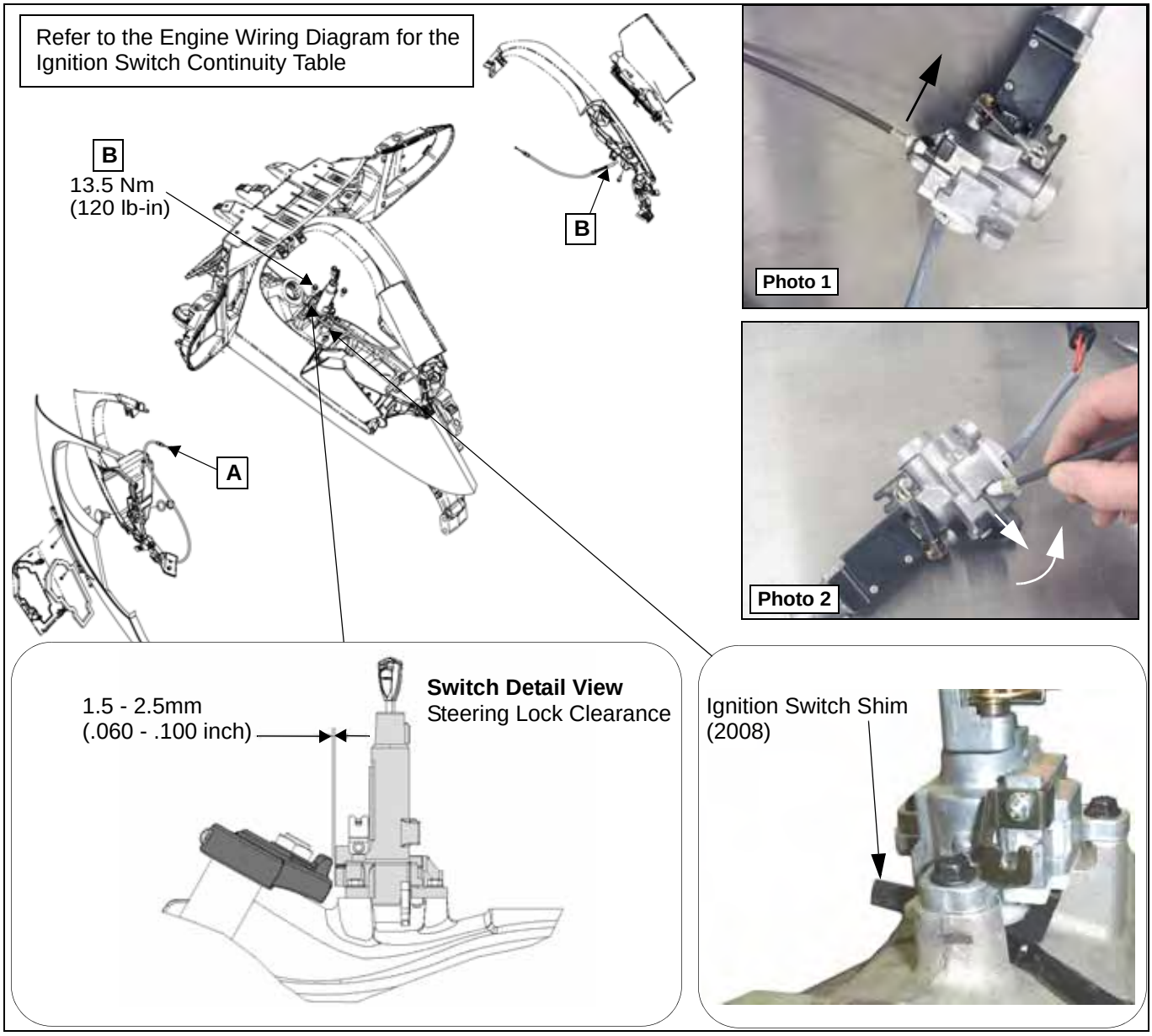

© 2009 Polaris Sales Inc.

NOTES

© 2009 Polaris Sales Inc.

CHAPTER 18
ELECTRIC STARTER

GENERAL 18.2
SAFETY INFORMATION 18.2
SPECIFICATIONS 18.2
STARTER SPECIFICATIONS 18.2
FASTENER TORQUE SPECIFICATIONS 18.2
SPECIAL TOOLS 18.3
STARTER SYSTEM SPECIAL TOOLS 18.3
DIAGNOSTICS 18.3
TROUBLESHOOTING FLOW CHART MENU 18.3
STARTER CIRCUIT DIAGRAM 18.4
TROUBLESHOOTING FLOW CHART 1 . . . . . 18.5
TROUBLESHOOTING FLOW CHART 2 . . . . . 18.6
TROUBLESHOOTING CHART 3 . . . . . 18.6
BATTERY INSPECTION & CHARGING PROCEDURES 18.7
BATTERY LOAD TEST 18.7
CIRCUIT & SWITCH TESTING 18.7
STARTER RELAY GROUND BYPASS CIRCUIT TEST 18.7
NEUTRAL SWITCH BYPASS TEST 18.8
CLUTCH SWITCH / CIRCUIT TEST 18.9
CLUTCH SWITCH REMOVAL 18.10
CLUTCH SWITCH INSTALLATION 18.10
STARTER RELAY TO STARTER MOTOR POSITIVE CABLE BYPASS TEST 18.10
STARTER RELAY POSITIVE CIRCUIT TEST 18.11
STARTER RELAY BYPASS TEST 18.11
STARTER RELAY TO STARTER MOTOR POSITIVE CABLE BYPASS TEST 18.12
POSITIVE SIDE VOLTAGE DROP TEST 18.13
NEGATIVE CABLE BYPASS TEST 18.15
NEGATIVE SIDE VOLTAGE DROP TEST 18.16
STARTER CURRENT DRAW TEST 18.18
STARTER MOTOR REMOVAL 18.19
STARTER MOTOR INSTALLATION 18.19
STARTER CLUTCH REMOVAL 18.19

© 2009 Polaris Sales Inc.

GENERAL

SAFETY INFORMATION

WARNING
Always disconnect the battery (negative terminal first) before servicing the starter motor.

- Inspect the condition of the battery before troubleshooting the starter system. Also inspect main engine ground (on crankcase - upper left rear corner) and battery cable connections.

SPECIFICATIONS

STARTER SPECIFICATIONS

ELECTRIC STARTER & STARTER CLUTCH		
Item	**Standard**	**Service Limit**
Battery Voltage (Open Circuit Voltage)	Above 12.5 Vdc	-
Commutator Resistance:		
Between Any Two Bars	Continuity (0 Ohms)	-
Any Commutator Bar to Armature Shaft	Infinity (OL on Fluke™ 73)	-
Battery Input Terminal Resistance to Insulated Brush	Continuity (0 Ohms)	-
Battery Cable Terminal Resistance to Motor Case	Infinity (OL on Fluke™ 73)	-
Starter Motor Brush Length	13 mm ± 0.5 mm (0.512 ± 0.020")	6.5 mm (0.255")
Starter Motor Operating Amp Draw	90-120 Amps	Use inductive ammeter
Starter Motor No Load Amp Draw (Bench Test)	30-40 Amps after initial surge	-
Starter Torque Limit Clutch Break-Away Torque	50 lb-ft when new	35-45 lb-ft after break-in
Voltage Drop Allowed: Each Connection - Pos Circuit	0.2 V DC (200 millivolts)	-
Voltage Drop Allowed: Each Connection - Neg Circuit	0.2 V DC (200 millivolts)	-
Total Voltage Drop Allowed - Pos Side Of Starter	0.3 V DC (300 millivolts)	-
Total Voltage Drop Allowed - Neg Side Of Starter	0.3 V DC (300 millivolts)	-

FASTENER TORQUE SPECIFICATIONS

TORQUE SPECIFICATIONS - STARTER SYSTEM		
Description	**Torque Nm**	**Torque lb-ft (in-lb) & Notes**
Bearing Cover Screws (starter gear cover)	10 Nm	(85 in-lb)
Electrical Terminal (+) to Starter Motor	6.8 Nm	(60 in-lb)
Gear Position Switch (to crankcase)	2.8 Nm	(25 in-lb)
Positive Cable (+) to Motor Terminal	6.8 Nm	(60 in-lb)
Primary Drive Gear Bolts (to Crankshaft)	41 Nm	30 lb-ft. Clean crankshaft threads thoroughly. Install new bolts.
Regulator / Rectifier Screws	10 Nm	(85 in-lb)
Rotor Bolt (Flywheel)	102 Nm	75 lb-ft
Starter Motor to Crankcase Bolts	30 Nm	22 lb-ft
Starter Motor Case Screws	10 Nm	(85 in-lb)

© 2009 Polaris Sales Inc.

SPECIAL TOOLS

STARTER SYSTEM SPECIAL TOOLS

SPECIAL TOOL	PART NUMBER
Digital Multi-Meter	PV-43546
Optional Amp Meter Inductive Clamp	PV-39617
Rotor Puller (Flywheel)	PV-43533
Engine Stop Tool	PV-43502
Connector Test Adapter Kit	PV-43526

DIAGNOSTICS

TROUBLESHOOTING FLOW CHART MENU

Symptom	Possible Cause	Refer To:
Starter motor does not turn with transmission in neutral. Turns with clutch pulled in.	Neutral switch or circuit malfunction	Test Neutral Switch (page 18.8)
Starter motor does not turn with transmission in gear and clutch lever pulled in. Turns with transmission in neutral.	Clutch switch or circuit malfunction, Reverse Switch (if equipped) or circuit malfunction.	Test Clutch Switch (page 18.9) and reverse switch (page 19.41).
Starter motor will not turn	Low battery voltage. Starter button faulty. Poor cable connections. Main engine ground loose (front left corner of crankcase under the electrical cover).	See Troubleshooting Flow Chart 1 (page 18.5)
Starter motor turns slowly. Engine may or may not start.	Low battery. Faulty starter motor or drive mechanism. Engine mechanical problem.	See Troubleshooting Flow Chart 2 (page 18.6)
Starter motor turns, but engine does not turn.	Starter torque limit clutch slipping (Chapter 9).	See Troubleshooting Flow Chart 3 (page 18.6)
Starter motor turns at normal speed, but engine does not start.	Ignition Problem Engine Problem Fuel Delivery Problem	Chapter 17 Chapter 7-10 Chapter 5

© 2009 Polaris Sales Inc.

STARTER CIRCUIT DIAGRAM

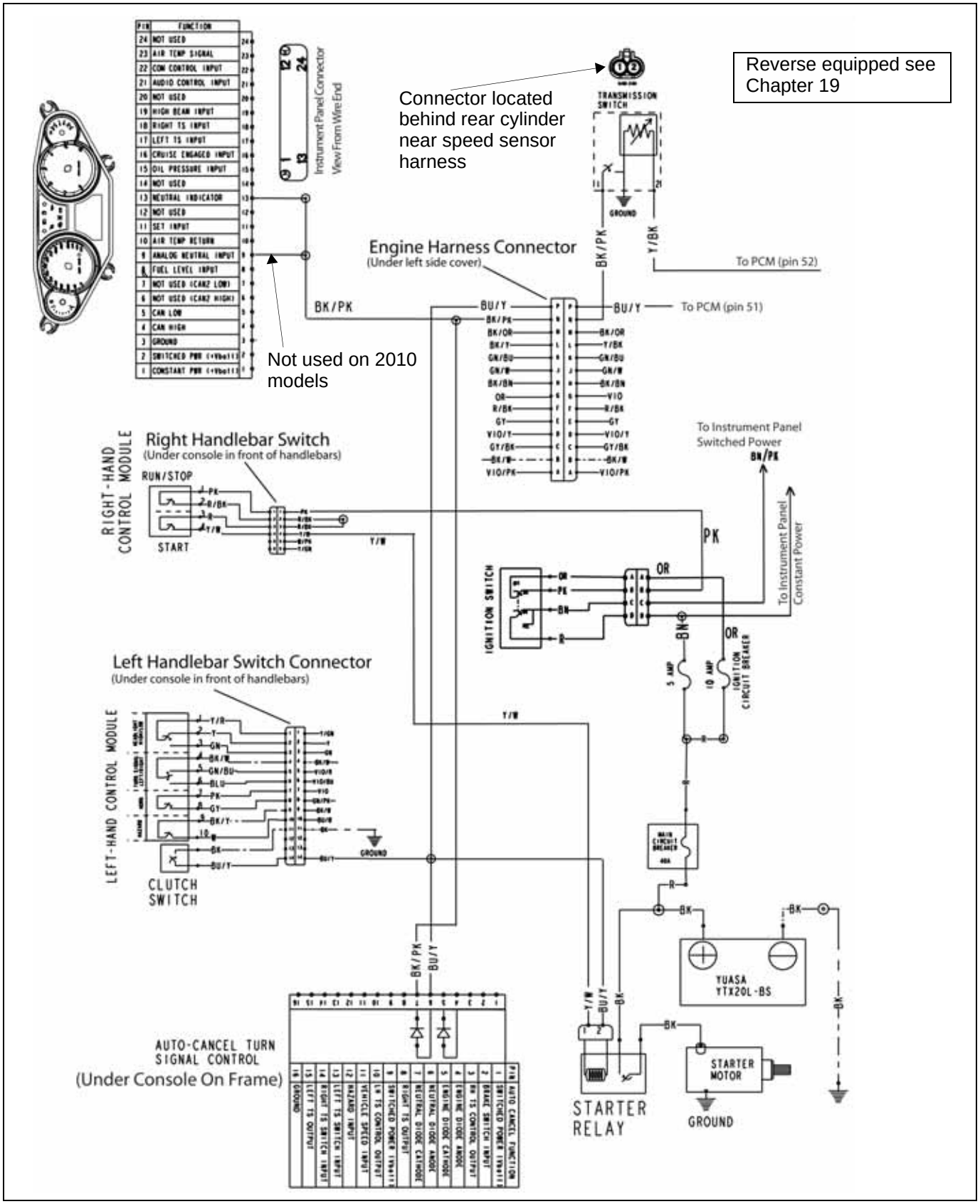

© 2009 Polaris Sales Inc.

TROUBLESHOOTING FLOW CHART 1

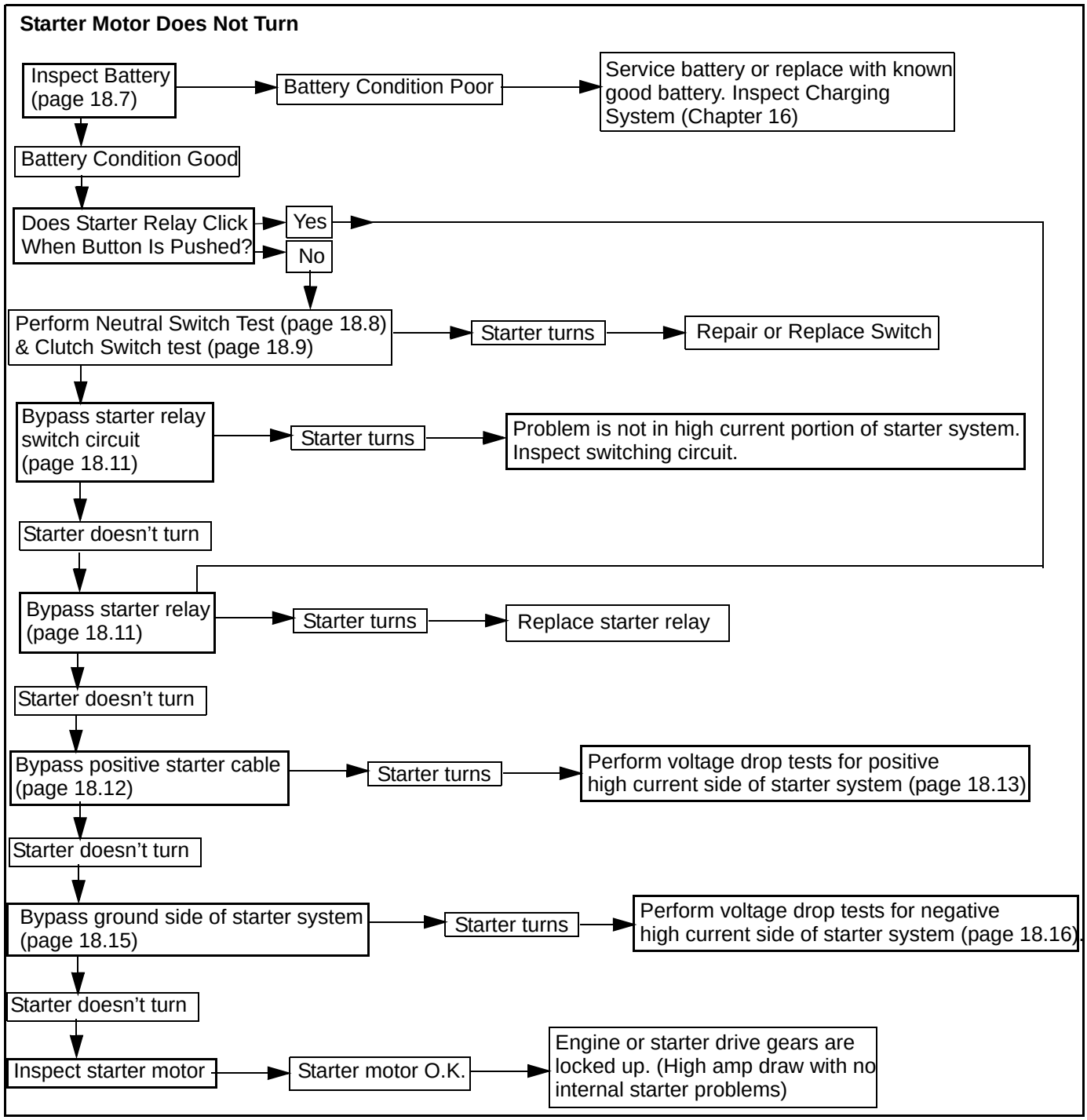

WARNING

Ensure that motorcycle is secure and transmission is in neutral for all tests.

CAUTION

Inspect fuses and make sure battery is fully charged before inspecting starter system.

© 2009 Polaris Sales Inc.

TROUBLESHOOTING FLOW CHART 2

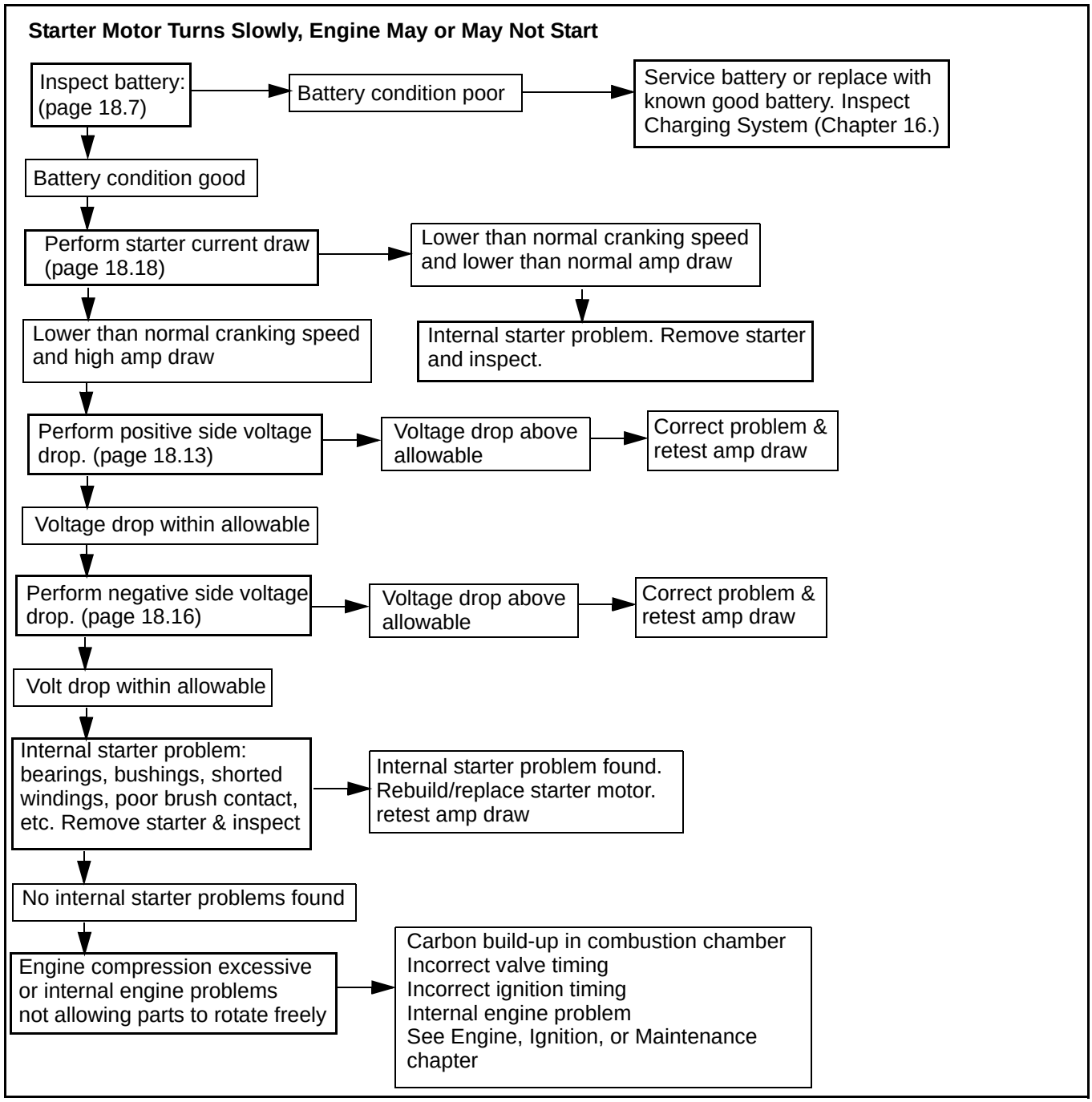

NOTE: Diagnostics require a Digital Multi Meter with a high current shunt or an inductive ammeter clamp.

TROUBLESHOOTING CHART 3

Symptom	Possible Cause	Possible Reason and/or Inspection Needed
Starter motor turns, but engine does not turn. The starter motor can be heard spinning.	Starter clutch malfunction.	Refer To Procedure Chapter 9.
	Starter torque limit clutch slipping.	Refer To Procedure Chapter 9.
	Starter gears damage.	Refer To Procedure Chapter 9.

© 2009 Polaris Sales Inc.

BATTERY INSPECTION & CHARGING PROCEDURES

1. Refer to Chapter 16.

BATTERY LOAD TEST

1. Load test battery using a commercially available battery load tester. Follow the battery load tester manufacturer instructions.

NOTE: Although not as conclusive, the following test can be used to direct troubleshooting efforts if a battery load tester is not readily available.

2. Charge battery until open circuit voltage is above 12.5 Vdc (page 18.7).
3. Install battery and connect battery cables.
4. Connect digital multimeter to battery and keep it connected for duration of test.
5. Turn ignition key on and move head light high beam switch to High Beam for 1 minute (without the engine running).

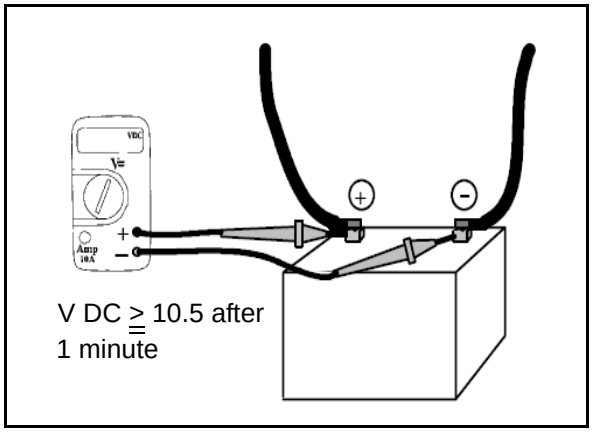

6. Turn ignition off. Measure battery voltage.
7. If battery voltage drops below 10.5 Vdc, re-charge and re-test battery or replace it.

CIRCUIT & SWITCH TESTING

STARTER RELAY GROUND BYPASS CIRCUIT TEST

⚠ WARNING

Verify that motorcycle is secure and that transmission is in neutral for the following inspection.

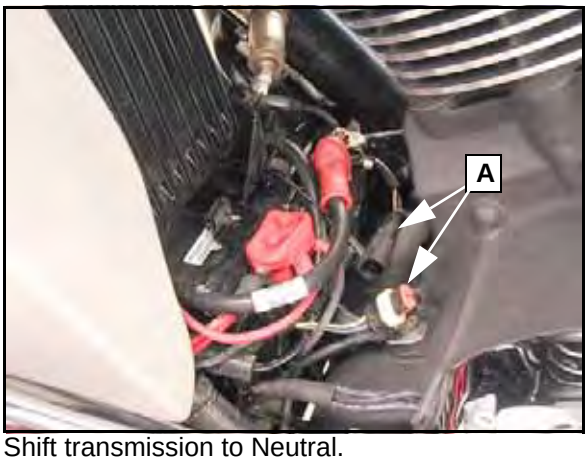

1. Shift transmission to Neutral.

NOTE: Shifting transmission to neutral or pulling in the clutch lever provides a ground path for the starter relay. This test will temporarily bypass these components. Refer to Starter Circuit Diagram on page 18.4.

2. Back-probe the Blue / Yellow wire (A) at the solenoid connector (shown disconnected) and connect it to a ground (Solenoid connector must remain assembled).
3. Turn ignition switch ON and place engine stop switch in RUN position.
4. Press starter button. If starter motor turns, inspect clutch switch (page 18.9) and gear position switch page 18.8).
5. If starter motor does not turn, inspect button by performing the STARTER RELAY POSITIVE CIRCUIT TEST on 18.11.

© 2009 Polaris Sales Inc.

NEUTRAL SWITCH BYPASS TEST

The symptom of a faulty neutral switch circuit is:

- Starter motor will not operate when transmission is in neutral with clutch lever released.
- Starter will operate when clutch is pulled in.

1. Turn ignition switch on and place engine stop switch in the RUN position.
2. Shift transmission into Neutral.
3. Observe neutral indicator light.
4. If indicator is not working with transmission in neutral:
   - Disconnect neutral / gear indicator switch (B).

NOTE: 2008-2009 models: When gear position switch is disconnected, symbol "N" appears on information display regardless of gear position (with Key ON).

- Connect Black/Pink of harness side connector pin to ground on engine (not switch side of connector) with a jumper lead. This provides a path to ground for the neutral light.

5. If the neutral lamp comes on, the gear position switch or wiring between connector and switch is at fault. Continue to Step 6 to test the gear position switch.
6. Set meter to measure resistance.
7. Place one meter lead on Black/Pink wire on switch side of connector.

8. Connect the other lead to engine ground.
9. Compare reading to Table 1 below.
10. Replace neutral switch or repair wiring as necessary.
11. If neutral switch is working correctly and neutral indicator did not light with the harness wire grounded, inspect neutral lamp circuit wiring and connectors for an open circuit.

If switch is faulty, refer to Gear Position Switch Removal / Installation (page 19.16).

TABLE 1 - TESTING NEUTRAL PORTION OF GEAR POSITION SWITCH

Gear Position	Meter Probe # 1	Meter Probe # 2	Ohmmeter Reading*
Neutral	Black/Pink (switch side of connector)	Crankcase (ground)	$\leq .5\ \Omega$
Any Gear - Other Than Neutral	Black/Pink (switch side of connector)	Crankcase (ground)	OL
* Be sure to subtract meter probe resistance from resistance reading			

© 2009 Polaris Sales Inc.

CLUTCH SWITCH / CIRCUIT TEST

Refer to Starter Circuit Diagram on page 18.4.

Symptom of a faulty clutch switch circuit:

- Starter motor will not operate with transmission in gear and clutch lever pulled in. Starter operates with transmission in neutral.

Use an ohmmeter to determine if continuity is present when the switch is closed (lever pulled in).

1. Transmission can be in neutral or in any gear.
2. Separate the 2 pin connector (A) from starter solenoid.
3. Set meter to measure ohms (Ω).
4. Connect red (+) lead of DMM to Blue/Yellow wire in connector on harness side using a test probe (A) from Victory Connector Test Kit PV-43526.
5. Connect black meter lead to battery negative post or ground.
6. Operate clutch lever while observing meter display:
   - Pull clutch lever to the handlebar. Meter should display continuity or very low resistance (less than 1 ohm) when the clutch switch closes.

   - Release clutch lever, meter should display a higher resistance in the range of 2K - 9K (2000 - 9000Ω).

7. If clutch switch does not test as described, inspect clutch switch, clutch switch wiring or mounting of switch to clutch lever for faults.
8. Disconnect switch wiring connector at handlebar.

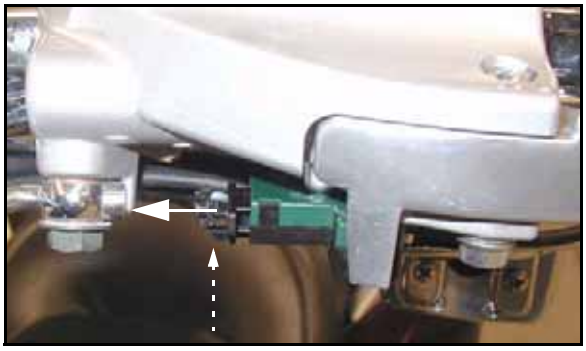

9. Connect ohmmeter across the *outer 2 terminals* of clutch switch:
   - Test for continuity when clutch lever is pulled to handlebar.
   - Test for high resistance with lever released.

10. If switch tests correctly at connector, check circuit between clutch lever switch and starter relay, including the LH bar switch connector.
11. If switch fails test, inspect mounting of switch.
12. If switch is mounted correctly and physically operates but does not open and close electrically, replace switch.

© 2009 Polaris Sales Inc.

CLUTCH SWITCH REMOVAL

1. Disconnect wire harness at the switch (B).
2. Remove retaining screw (C). Pull clutch lever and secure it to the handlebar. Remove switch.

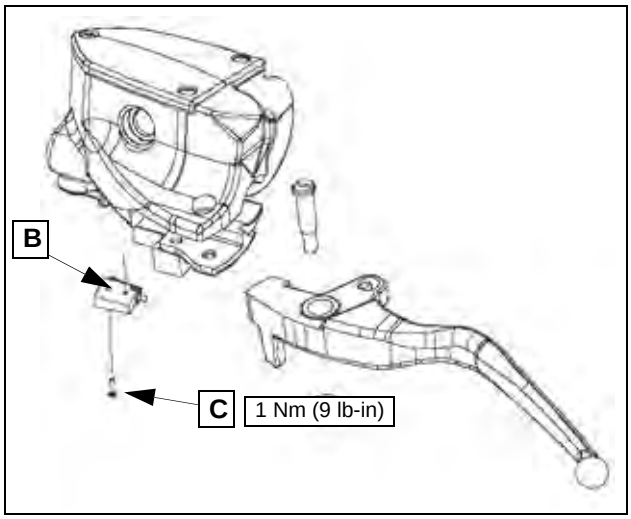

CLUTCH SWITCH INSTALLATION

1. Pull clutch lever and secure to handlebar.
2. Install switch and retaining screw. Torque to specification.
3. Connect wire harness.
4. Release clutch handle.
5. Verify proper operation.

STARTER RELAY TO STARTER MOTOR POSITIVE CABLE BYPASS TEST

WARNING

Secure motorcycle and place transmission in neutral for the following test.

WARNING

The following test involves high current, heat and possible sparks. Wear a face shield and approved safety glasses while doing the following test.

1. Place the transmission in neutral.
2. Connect one clamp of a heavy-duty, automotive remote starter switch to positive terminal lug at starter motor.

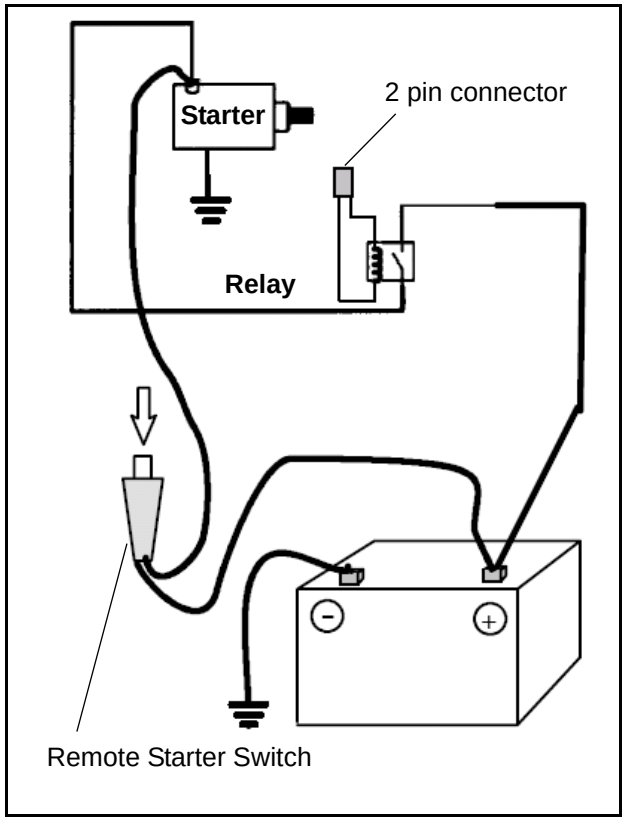

3. Connect other clamp of remote starter switch to positive terminal of battery.

WARNING

Do not allow any part of the jumper cable clamp to touch the chassis or any other ground. Be sure transmission is in neutral.

4. Make sure transmission is in neutral, key switch off and stop switch off.
5. Pull in clutch lever and depress the remote starter switch momentarily.
6. If starter turns, there is excessive resistance in the positive, high current side of the starter system. Go to Positive Side Voltage Drop Test.
7. If starter does not turn, go to Negative Cable Bypass Test.

© 2009 Polaris Sales Inc.

STARTER RELAY POSITIVE CIRCUIT TEST

WARNING

Secure motorcycle and place transmission in neutral for the following test.

Refer to Starter Circuit Diagram on page 18.4.

1. Place the transmission in neutral.
2. Remove electrical cover.
3. Separate connector at starter relay.
4. Set DMM to **DC Volts**.
5. Check battery voltage by testing across battery terminals. Voltage reading should be at or above 12.5 Vdc.
6. Connect red (+) lead of DMM to the Yellow / White wire of the starter relay wiring harness connector (A) using a test probe from Victory Connector Test Kit PV 43526.

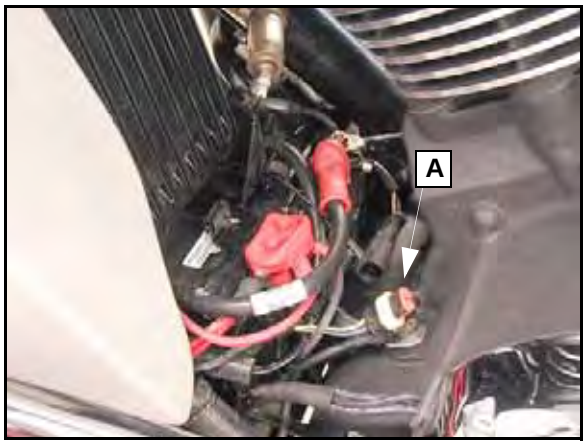

7. Connect DMM black lead to battery negative post.
8. Turn ignition key ON and Engine Stop Switch to RUN position.
9. Press starter button. The meter should display battery voltage. If voltage is more than .2 volts below battery voltage, inspect the power supply circuit.
10. If no voltage is present on the wire, check for power on pin 3 of the right handlebar switch connector (located under the console in front of the handlebars).
11. If power is present on the BK/R wire (pin 3) press the start button to determine if power is supplied to the Y/W wire. Check for good continuity through the start button (pin 3 to pin 4 on the switch side connector) and for good continuity from switch to starter relay connector on the Y/W wire.

STARTER RELAY BYPASS TEST

WARNING

Secure motorcycle and place transmission in neutral for the following test. Be sure the transmission is in neutral!

WARNING

The following test involves high current, heat and possible sparks. Wear a face shield and approved safety glasses while doing the following test. Only use the tool recommended to prevent excessive heat and possible burns.

1. Place the transmission in neutral.

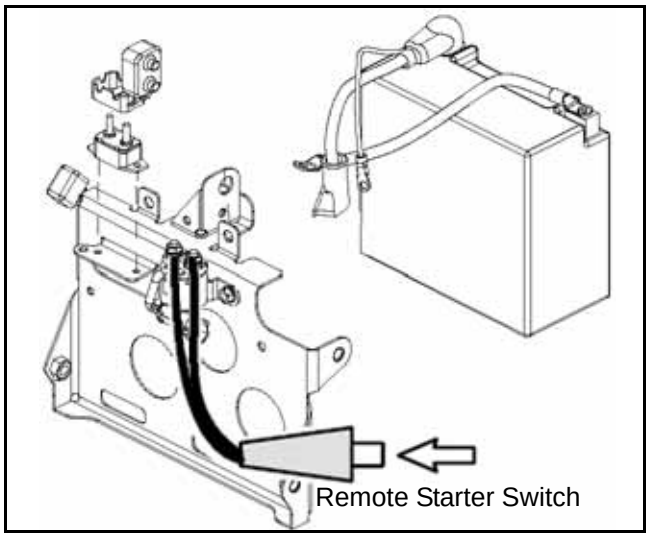

2. Remove the electrical cover to access the solenoid on the back of the battery box.
3. Connect one lead of a remote starter switch to one of the main battery terminal posts on the relay and the other lead to the other main terminal post on the relay.

CAUTION

Do not allow the metal clips of the remote starter relay switch to touch each other and short out.

4. Depress button on remote starter switch.
5. If starter motor operates, and the Positive Circuit Test, Clutch Switch Test, and Neutral Switch Test have passed inspection, replace the relay.
6. If the starter motor does not operate, inspect cables by performing tests on following pages.

© 2009 Polaris Sales Inc.

STARTER RELAY TO STARTER MOTOR POSITIVE CABLE BYPASS TEST

WARNING

Secure motorcycle and place transmission in neutral for the following test.

WARNING

The following test involves high current, heat and possible sparks. Wear a face shield and approved safety glasses while doing the following test.

1. Place the transmission in neutral.

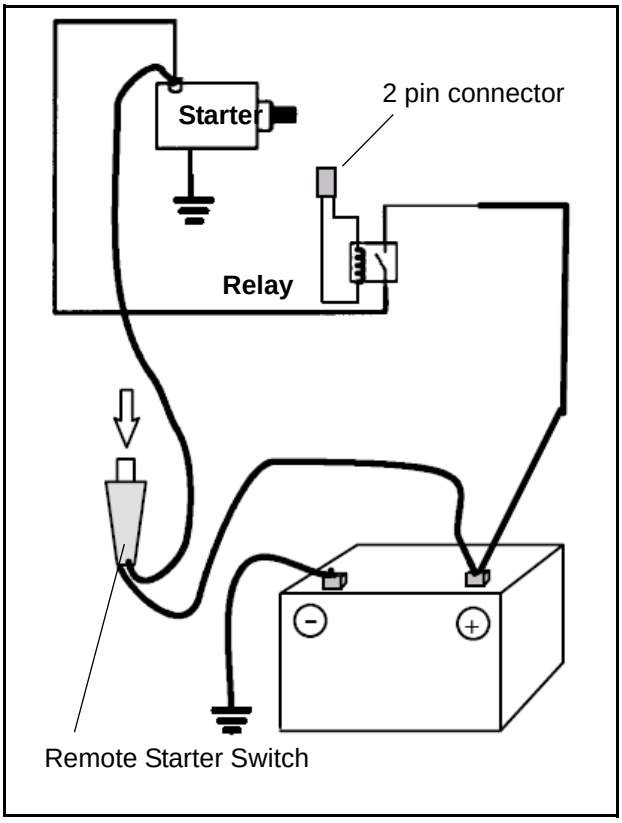

2. Connect one clamp of a heavy-duty, automotive remote starter switch to positive terminal lug at starter motor.
3. Connect other clamp of remote starter switch to positive terminal of battery.

WARNING

Do not allow any part of the jumper cable clamp to touch the chassis or any other ground. Be sure transmission is in neutral.

4. Make sure transmission is in neutral, key switch off and stop switch off.
5. Pull in clutch lever and depress the remote starter switch momentarily.
6. If starter turns, there is excessive resistance in the positive, high current side of the starter system. Go to Positive Side Voltage Drop Test.
7. If starter does not turn, go to Negative Cable Bypass Test.

© 2009 Polaris Sales Inc.

POSITIVE SIDE VOLTAGE DROP TEST

Symptoms: Starter motor does not turn or turns slowly when starter relay is bypassed. Starter motor works correctly when performing Starter Relay Positive Cable Bypass Test.

CAUTION

The ignition system must be disabled when doing voltage drop tests, if engine starts it will be difficult to measure voltage drop. To disable ignition system quickly and safely, observe the following steps.

1. Remove spark plug caps.
2. Install test spark plugs or plugs with the gap CLOSED into plug caps.
3. Ground spark plug center electrode to engine.

**NOTE: ***The total voltage drop between the battery (+) and starter motor must not exceed 0.3 Vdc (300 mV).

POSITIVE SIDE VOLTAGE DROP TESTS	
Location	**Allowable Voltage Drop**
Battery (+) To Starter (+)	0.3 Vdc (300 mV)
Battery (+) to Battery Side of Relay	0.2 Vdc (200 mV)*
Across Relay	0.2 Vdc (200 mV)*
Starter (+) to Starter Side of Relay	0.2 Vdc (200 mV)*

CAUTION

Only operate starter long enough to stabilize the reading on the DMM (less than 10 seconds). Let starter motor cool down between each voltage drop test to prevent damage to starter motor.

4. Place transmission in neutral.

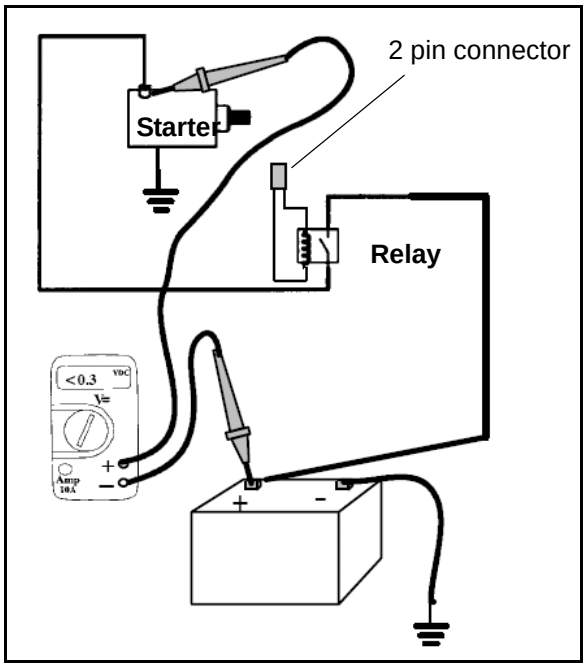

5. Set DMM to DC Volts.
6. Place one lead of DMM to positive battery post.
7. Place the other lead of the DMM to starter motor positive terminal screw.
8. Turn ignition switch on, turn engine stop switch to run position. Pull in clutch lever.
9. Operate the starter normally (no jumper cables in place) and observe meter display.
10. If DMM reads more than 0.3 Vdc (300 mV DC) when the starter motor is engaged, it indicates that there is excessive resistance in the starter's battery positive path. Continue with the following tests to isolate each section of the positive path and observe the voltage drop with DMM leads placed as indicated.

(Cont.)

© 2009 Polaris Sales Inc.

11. Place one lead of DMM to positive battery post. Ensure DMM is set to read DC Volts.

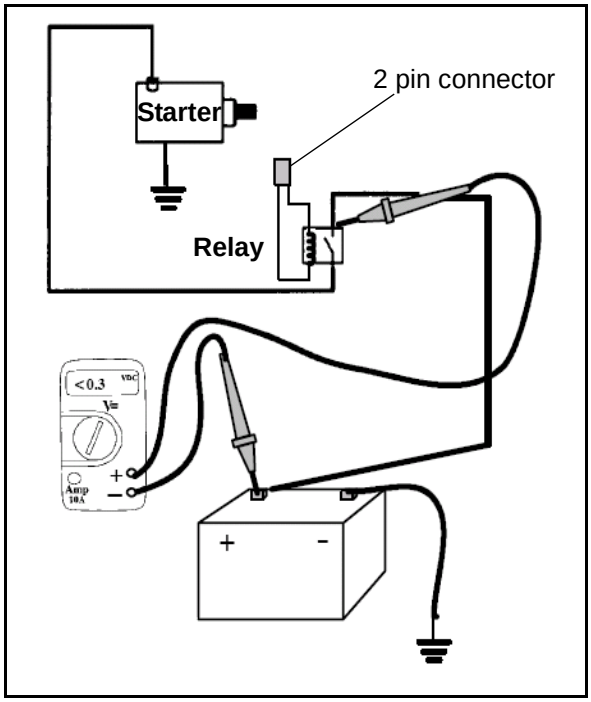

12. Place other lead of DMM to relay terminal leading to battery.
13. Engage starter and observe meter display, it should read less than 0.2 Vdc (200 mV DC).
14. If voltage drop is observed, the cable, connection at the battery or connection at the relay is causing resistance and must be corrected.
15. Inspect cable ends for corrosion where cable is connected to terminal lugs.
16. Remove cable. Set the DMM to read Ohms.
17. Place DMM leads at both ends of the cable and measure the cable's resistance. The resistance should be 0 ohms. Replace cable if necessary.
18. Inspect battery post, battery cable lug and relay lug for corrosion or looseness.

NOTE: Corrosion has resistance that limits or stops the flow of current to the starter motor.

19. If corrosion is found, wash all connections with a solution of baking soda and water, wire brush all contact areas, apply a light film of dielectric grease to the hardware and tighten connections. Retest to verify problem has been corrected.

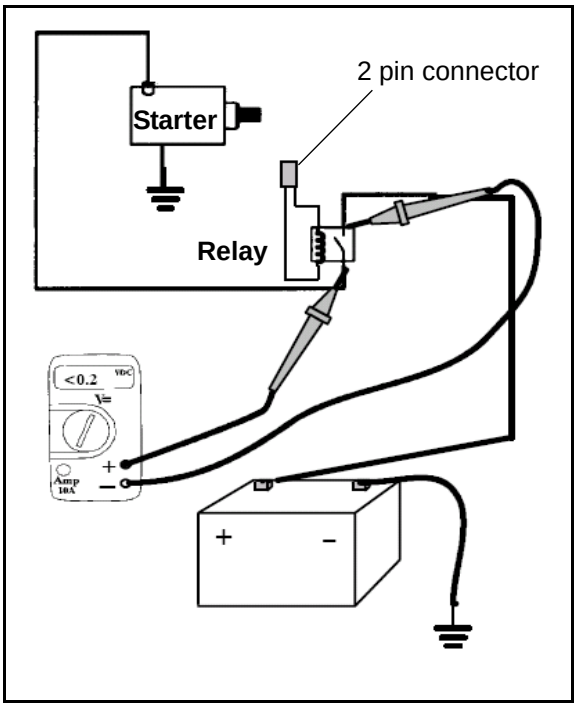

20. Place one lead of DMM to battery side of relay. Reset DMM to read DC Volts if necessary.
21. Place other lead to starter motor side of relay.
22. Engage starter and observe meter display; it should read less than 0.2 Vdc (200 mV DC).
23. If voltage drop is observed, remove cables and clean cable terminals and relay terminals. Reattach cables. Retest voltage drop.
24. If voltage drop is still observed through the relay, replace relay.

(Cont.)

© 2009 Polaris Sales Inc.

25. Place one lead of DMM to starter motor side of relay. Ensure DMM is set to read Volts DC.

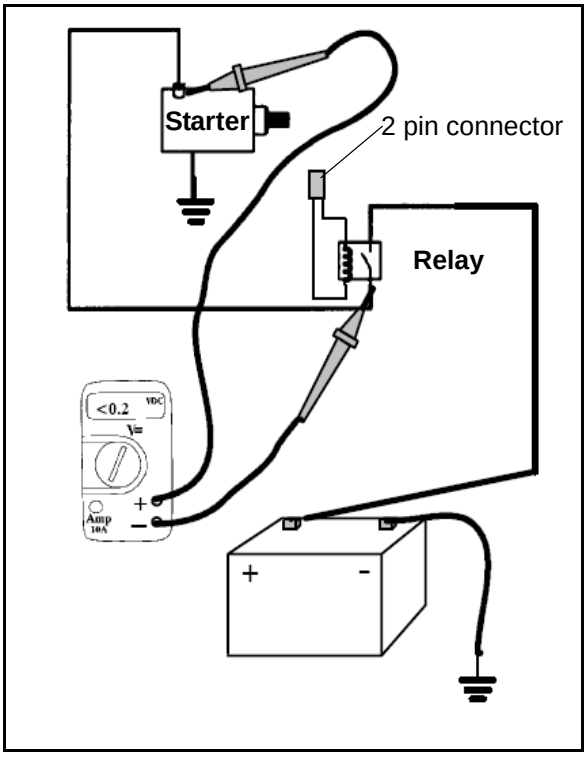

26. Place other lead of DMM to starter motor positive terminal.
27. Engage starter and observe meter display.
28. If voltage drop is observed, cable connection at relay or connection at starter motor is causing resistance and must be corrected.
29. Inspect cable ends for corrosion where cable is connected to terminal lugs.
30. Remove cable. Set DMM to read Ohms.
31. Place DMM leads at both ends of cable and measure cable resistance. The resistance should be 0 ohms. Replace cable if necessary. Remember to subtract test lead resistance.
32. Inspect starter cable lug and relay lug for corrosion or looseness.
33. If corrosion is found, wash all connections with a solution of baking soda and water, wire brush all contact areas, apply a light film of dielectric grease to hardware and tighten connections. Retest to verify problem has been corrected.

NEGATIVE CABLE BYPASS TEST

1. Place transmission in neutral.

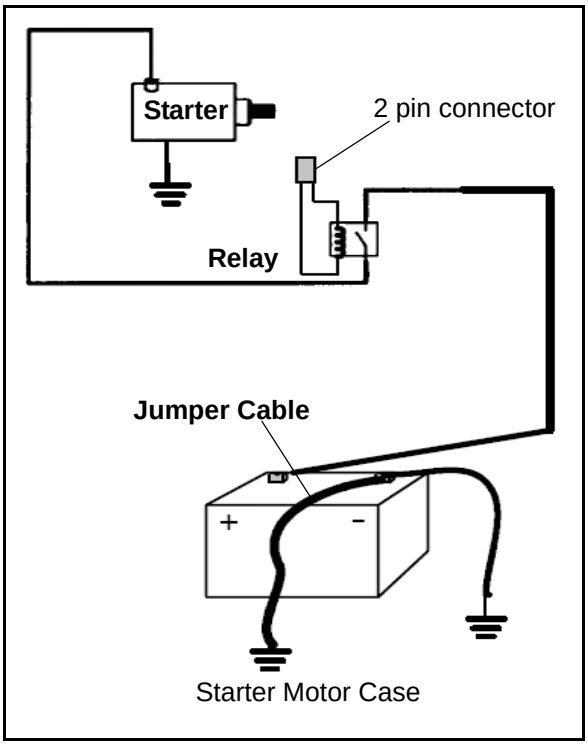

2. Remove electrical cover.
3. Connect one clamp of an automotive type jumper cable (heavy gauge jumper cable) to battery negative post.
4. Connect other end of jumper cable to a good ground location on starter motor body.
5. Make sure transmission is in neutral. Turn ignition key and stop switch on. Pull clutch lever in and attempt to start motorcycle.
6. If starter motor turns, there is excessive resistance in the negative, high current side of the starter system. Perform Negative Side Voltage Drop Test.
7. If starter does not turn and all troubleshooting steps have led to this test, replace starter motor.

© 2009 Polaris Sales Inc.

NEGATIVE SIDE VOLTAGE DROP TEST

NEGATIVE SIDE VOLTAGE DROP TESTS	
Location	**Allowable Voltage Drop**
Battery (-) To Starter Body (-)	0.3 Volts DC (300 mV)
Battery (-) to Battery Cable Ground Connection At Engine	0.2 Volts DC (200 mV)*
Battery Cable Ground Connection To Starter Body (-)	0.2 Volts DC (200 mV)*

NOTE: *The total voltage drop of these two items must not exceed 0.3 Volts DC (300 mV).

CAUTION

Only operate the starter long enough to stabilize the reading on the DMM (less than 10 seconds running time). Let starter motor cool down between each voltage drop tests to prevent damage to starter motor.

Disable the ignition system so engine will not start during this test.

- Remove spark plug caps.
- Install test spark plugs or plugs with the gap closed into plug caps.
- Ground center electrode of spark plugs to engine.

1. Place transmission in neutral.

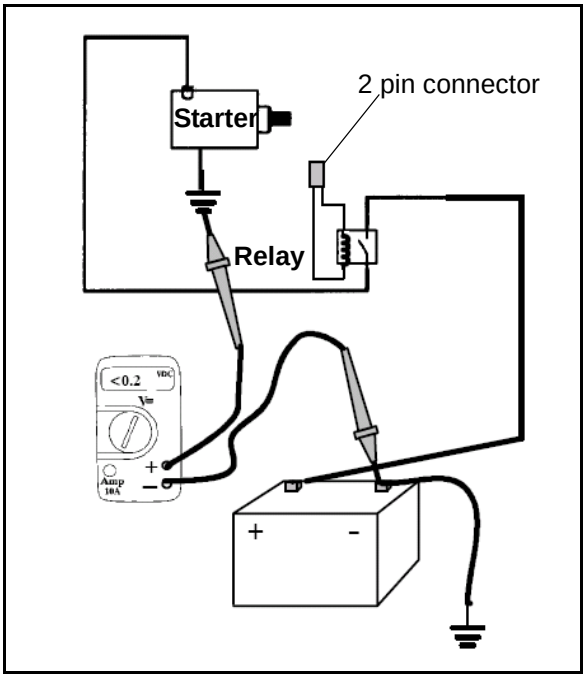

2. Set DMM to DC Volts.
3. Place one lead of DMM to negative battery post.
4. Place other lead of DMM to a clean ground on starter motor body.
5. Turn ignition switch ON and engine stop switch to RUN position. Pull clutch lever in.
6. Operate starter normally (no jumper cables in place) and observe meter display.
7. If DMM reads more than 0.3 Volts DC when starter motor is engaged, it indicates that there is excessive resistance in the starter's battery negative path. Continue with the following tests to isolate each section of the negative path and observe the voltage drop with DMM leads placed as indicated.
8. Place one lead of the DMM to the negative battery post. Ensure that the DMM is set to read DC Volts.
9. Place the other lead of the DMM to the battery cable engine ground connection.

(Cont.)

© 2009 Polaris Sales Inc.

10. Engage the starter and observe the meter display, it should read less than 0.2 Volts DC (200 mV DC).

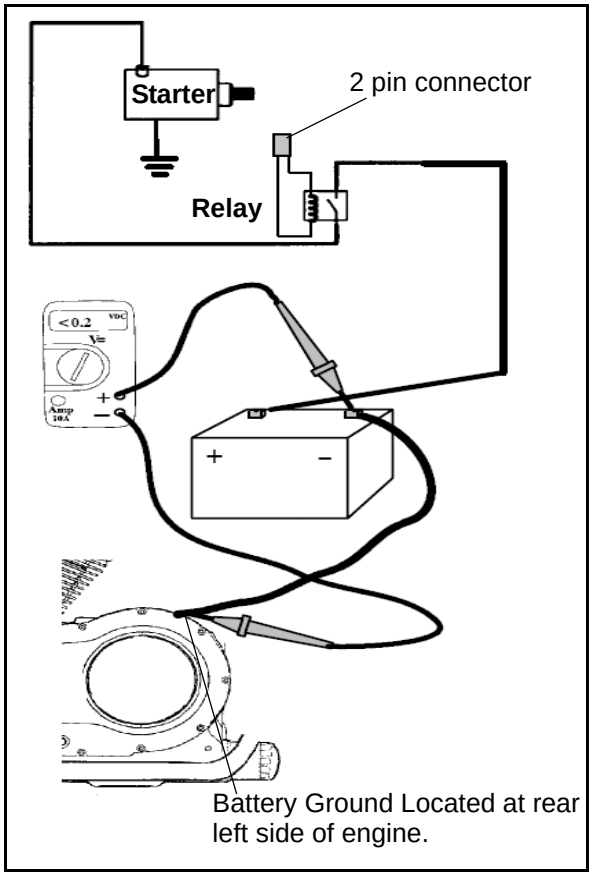

11. If voltage drop is observed, the cable, connection at the battery, connection at the engine or mounting surface of the starter motor body is causing resistance and must be corrected.
12. Inspect the cable ends for corrosion where cable is connected to battery or engine.
13. Remove the cable. Set the DMM to read Ohms.
14. Place the DMM leads at both ends of the cable and measure the cable's resistance. The resistance should be 0 ohms. Remember to subtract meter lead resistance. Replace the cable if necessary.
15. Inspect the battery post, battery cable lug and engine battery cable mount for corrosion or looseness.
16. If corrosion is found, wash all connections with a solution of baking soda and water, wire brush all contact areas, apply a light film of dielectric grease to the hardware and tighten connections. Retest to verify problem has been corrected.
17. Place one lead of DMM to battery cable mount at engine. Reset the DMM to read DC Volts if necessary.
18. Place the other lead on starter motor body.
19. Engage the starter and observe the meter display, it should read less than 0.2 Volts DC (200 mV DC).
20. If voltage drop is observed, there is resistance between the battery cable connection at engine and the mounting surfaces of the starter motor. While this would be unusual, it is possible.

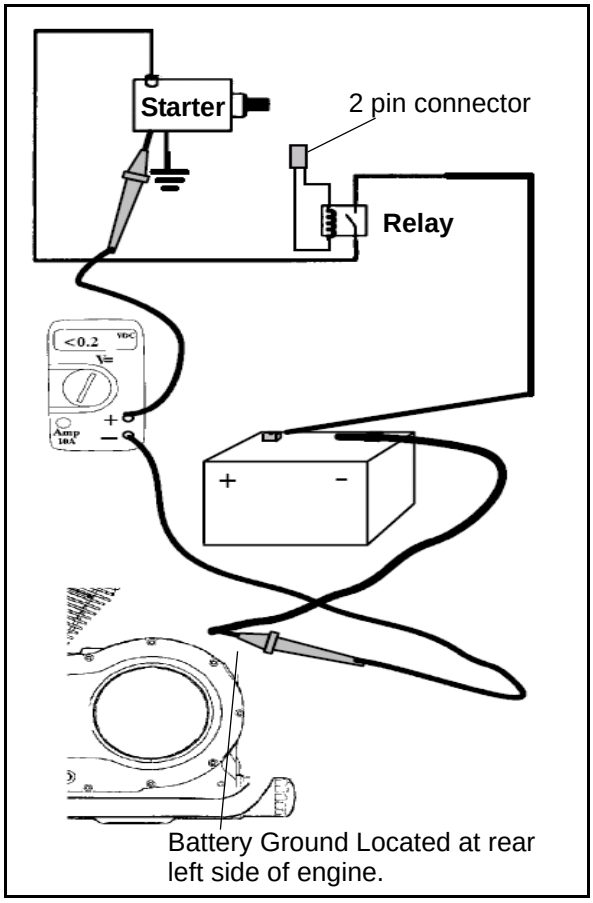

21. Remove and clean the connection between ground battery cable and engine.
22. Remove the starter and ensure that the starter is making firm contact with engine. Ensure that the starter mounting bolts are tight.
23. If corrosion is found, wash all connections with a solution of baking soda and water, wire brush all contact areas, apply a light film of dielectric grease to the hardware and tighten connections. Retest to verify problem has been corrected.

© 2009 Polaris Sales Inc.

STARTER CURRENT DRAW TEST

WARNING

Do not allow any part of the jumper cable clamp to touch the chassis or any other ground.

CAUTION

Disable the ignition system so that the engine will not start during this test.

Remove spark plug caps.

Install test spark plugs into plug caps.

Ground spark plugs against engine.

1. Inspect the battery (see procedure). Charge or replace battery as necessary before proceeding.
2. Place transmission in neutral.
3. Position an inductive ammeter clamp on battery positive cable.

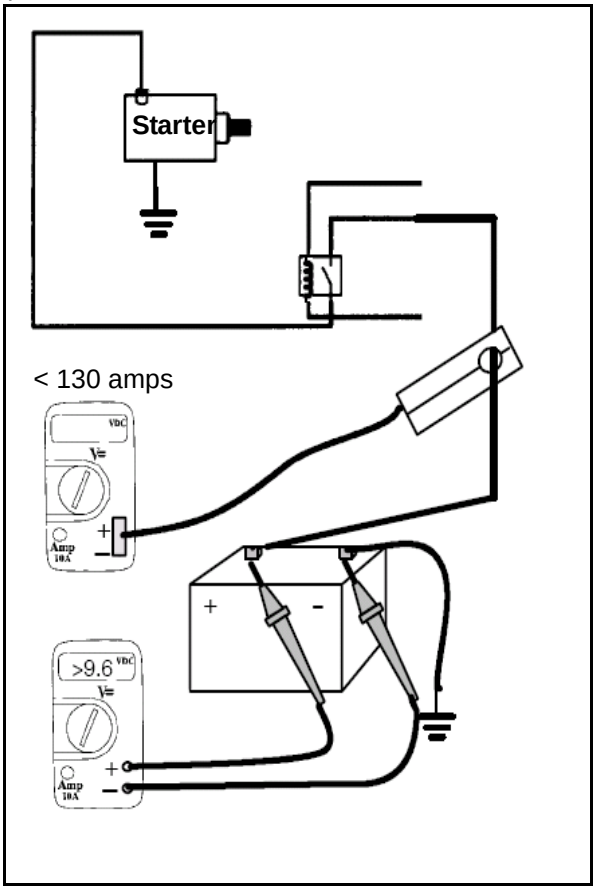

4. Set DMM to Volts DC scale and connect red lead of meter to positive post of battery.
5. Connect black lead of meter to negative post of battery.
6. Turn ignition switch on and observe ammeter. It should register negative amps. If it does not, turn the ammeter probe around.
7. Make sure ignition switch is on, engine stop switch is in the run position, transmission is in neutral, clutch lever pulled in and that the ignition system is disabled.
8. Press starter switch and crank starter for about 5 seconds and observe both meters and the tachometer.
9. The battery voltage should remain above 9.6 volts.
10. The amperage draw of the starter should not exceed 130 amps. See page 18.18 for Starter Current Draw chart.

© 2009 Polaris Sales Inc.

STARTER CURRENT DRAW RESULTS (Good Battery Condition Verified)			
Amperage Draw	**Battery Voltage**	**Engine RPM**	**Possible Problem**
90 to 120 amps	9.6 Volts DC or Greater	Greater Than 400 rpm	Normal
Less Than 90 amps	9.6 Volts DC or Greater	Less Than 400 rpm	Internal starter problems
Greater Than 130 amps	Less Than 9.6 Volts DC	Less Than 400 rpm	Inspect for voltage drops on positive or negative side of starter circuit.
Greater Than 130 amps	Less Than 9.6 Volts DC	Less Than 400 rpm	Voltage drops within acceptable limits. Remove starter & inspect.
Greater Than 130 amps	Less Than 9.6 Volts DC	Less Than 400 rpm	Voltage drops within acceptable limits. No internal starter problem. Engine compression is excessive or internal engine problems not allowing parts to rotate freely.

STARTER MOTOR REMOVAL

WARNING

Ensure that the ignition switch is turned off. Remove the negative cable at the battery before removing the starter motor.

1. Remove exhaust system. (Refer to Chapter 3)
2. Remove regulator/rectifier assembly.
3. Remove cable from starter terminal.

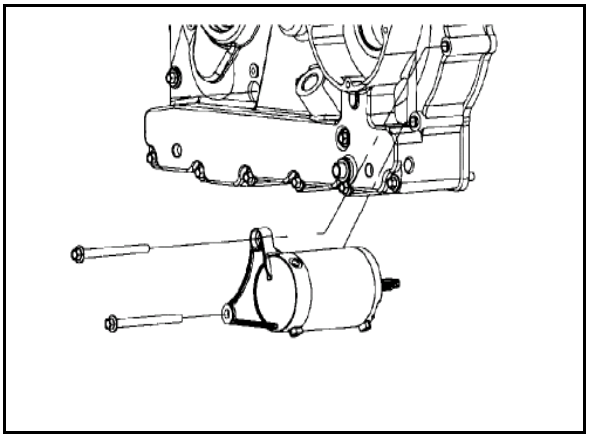

4. Place drain pan under starter.
5. Remove 2 starter motor mounting bolts and remove starter.

STARTER MOTOR INSTALLATION

WARNING

Make sure that the ignition switch is turned off and that the negative cable is disconnected from the battery before installing the starter.

1. Place starter into the engine case while aligning the starter mounting lugs as closely as possible during the installation process.
2. Rotate the starter to align starter mounting lugs with bolt holes in engine cases.
3. Install starter mounting bolts and tighten to specification.

30 Nm (22 lb-ft)

4. Connect starter motor cable and cable nut. Torque cable nut to specification.

6.8 Nm (60 in-lb)

5. Install regulator/rectifier assembly.

10 Nm (85 in-lb)

6. Install exhaust system. Refer to Chapter 3.
7. Connect negative battery cable.

STARTER CLUTCH REMOVAL

1. Refer to Chapter 9.

© 2009 Polaris Sales Inc.

NOTES

© 2009 Polaris Sales Inc.

CHAPTER 19
WIRING / LIGHTING SYSTEMS

FUSES 19.2
FUSE BOX LOCATION / FUSE REPLACEMENT 19.2
ABS FUSE 19.2
PRIMARY HEADLAMPS 19.3
ASSEMBLY VIEW 19.3
HEADLAMP CIRCUIT - LOW BEAM (2008-2010) 19.4
HEADLAMP CIRCUIT - HIGH BEAM (2008-2010). 19.5
HEADLIGHT POWER AND CONTROL RELAY OPERATION (2009-2010) 19.6
TURN SIGNAL SYSTEM (2008) 19.7
TURN SIGNAL SYSTEM WIRING DIAGRAM (2008) 19.7
TURN SIGNAL AUTO CANCEL MODULE OVERVIEW (2008). 19.8
AUTO CANCEL TURN SIGNAL SYSTEM SELF-DIAGNOSTICS - 2008 . . . . . 19.9
TURN SIGNAL DIAGNOSTIC BLINK CODES - 2008 . . . . . 19.10
TURN SIGNAL SYSTEM (2009-2010) 19.11
SPEEDOMETER 19.13
SWITCH TESTING 19.14
CRUISE CONTROL. 19.17
OPERATION OVERVIEW - SETTING SPEED 19.17
OPERATION OVERVIEW - RESUME / ACCELERATE. 19.17
OPERATIONAL OVERVIEW - DECELERATE / CANCEL 19.17
CRUISE CONTROL DIAGNOSTIC BLINK CODES (OVERVIEW) 19.18
CRUISE CONTROL DISENGAGE CODES 19.18
CRUISE MODULE INPUT / OUTPUT 19.18
CRUISE CONTROL SWITCH DIAGNOSTICS. 19.19
CRUISE CONTROL CABLE REPLACEMENT. 19.20
CRUISE CONTROL CABLE “LASH LEARN” PROCEDURE 19.21
HORN RELAY CIRCUITS 19.23
WINDSHIELD / TRUNK LAMP CIRCUITS 19.24
INSTRUMENT CLUSTER 19.25
SYSTEM DIAGRAM (2008 - 2010). 19.25
INSTRUMENT CLUSTER 24 PIN CONNECTOR INPUT / OUTPUT (2008-2009) . . . 19.26
INSTRUMENT CLUSTER 24 PIN CONNECTOR INPUT / OUTPUT (2010) 19.27
HEATERS (SEAT / HANDGRIP) 19.28
CONSOLE SWITCH WIRE CONNECTIONS 19.29
TIPOVER SENSOR (2009-2010) 19.30
AUDIO SYSTEMS 19.31
AUDIO SYSTEMS CONTROL SWITCH ON-BOARD DIAGNOSTICS 19.33
NAVIGATION SYSTEM. 19.35
GPS NAVIGATION & NAV MP3 PLAYER 19.35
AUDIO SYSTEM REPROGRAMMING (AUXILIARY CONTROLLER REFLASH) 19.36
REVERSE SYSTEM 19.39
WIRING DIAGRAM / REVERSE HARNESS 19.39
REVERSE SYSTEM DIAGNOSTICS 19.40-19.41
REVERSE SYSTEM SAFETY & OPERATION 19.42
REVERSE MODULE / FUSE ACCESS 19.42
TACHOMETER SIGNAL TEST 19.43
GROUND LOCATIONS 19.44
WIRE HARNESS VIEWS, ELECTRICAL CONNECTOR LOCATION. 19.45-19.47

© 2009 Polaris Sales Inc.

FUSES

FUSE BOX LOCATION

There are two fuse boxes under the windshield access panel. Remove the panel to access fuses, auto-reset circuit breakers, and relays. Use a fuse puller to remove a fuse if necessary.

LEFT FUSE BOX (DECAL PN 7174111) 2008-2010

IGNITION 10A	HEADLIGHT POWER RELAY	HORN RELAY	SECONDARY LIGHTS RELAY
HEADLIGHT 20A			
GAUGES 5A	RADIO 25A	HORN 20A	TURN SIGNAL/BRAKE RELAY
SPARE FUSE	SECONDARY LIGHTS 20A	TS/BRAKE 20A	

RIGHT FUSE BOX (DECAL PN 7174112) 2008

FOG LIGHTS RELAY	ENGINE RELAY	FUEL PUMP/ IGNITION COIL RELAY	CHASSIS ELECTRICAL RELAY
SPARE FUSE	ENGINE 15A	FP/IGN COIL 15A	HEADLIGHT CONTROL RELAY
SPARE FUSE	WINDSHIELD 20A	CHASSIS 20A	

RIGHT FUSE BOX (DECAL PN 7175380) 2009

HEADLIGHT CONTROL RELAY	ENGINE RELAY	FUEL PUMP/ IGNITION COIL RELAY	CHASSIS ELECTRICAL RELAY
SPARE FUSE	ENGINE 15A	FP/IGN COIL 15A	HEADLIGHT SWITCHING RELAY 7175380
SPARE FUSE	WINDSHIELD 20A	CHASSIS 20A	

FUSE REPLACEMENT

To access relays and fuses:

1. Remove windshield access panel (page 3.6).
2. Push center pin of each dart upward and remove darts and cover panel(s).
3. Pull tabs away from cover(s) to release.
4. Refer to label on cover for fuse application and rating.

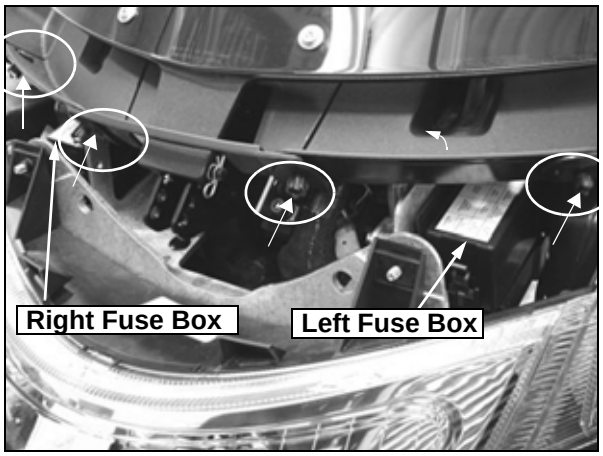

ABS FUSE

ABS fuses (A) are located under the windshield access panel (if equipped). The ABS warning lamp will stay on if fuses are removed or open (blown). ABS system information begins on page 15.32.

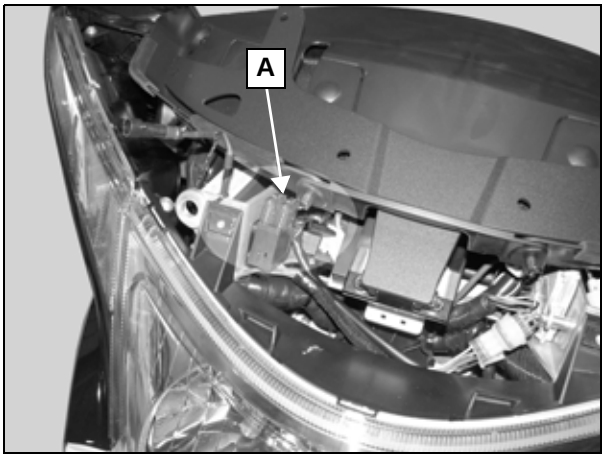

© 2009 Polaris Sales Inc.

PRIMARY HEADLIGHTS

ASSEMBLY VIEW

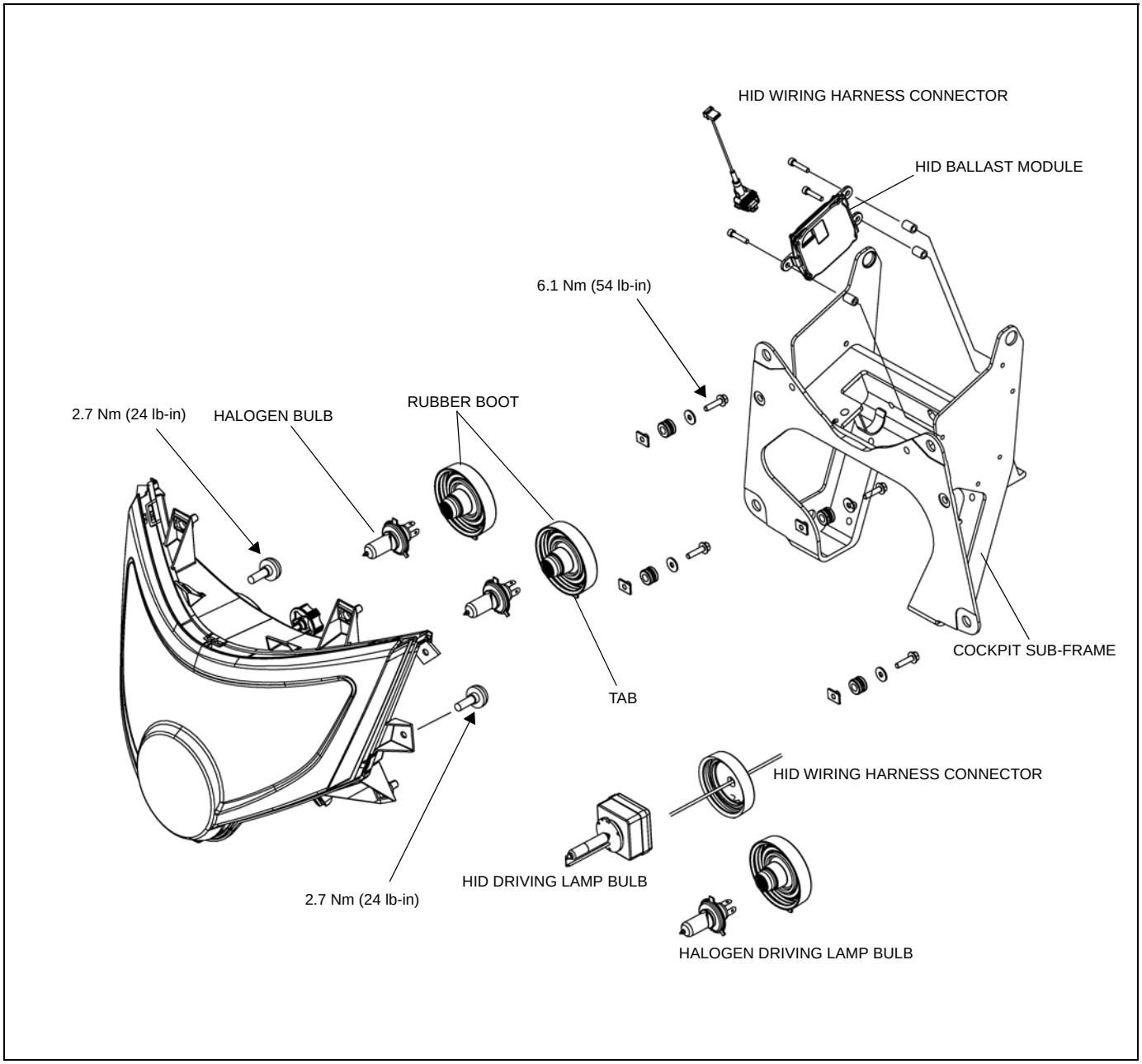

© 2009 Polaris Sales Inc.

HEADLIGHT CIRCUIT - LOW BEAM (2008-2010)

The starter button must be pressed to power the headlight circuit on 2009-2010 models.
See “HEADLIGHT POWER AND CONTROL RELAY OPERATION (2009-2010)” on page 19.6 for operation of the power and control relay.

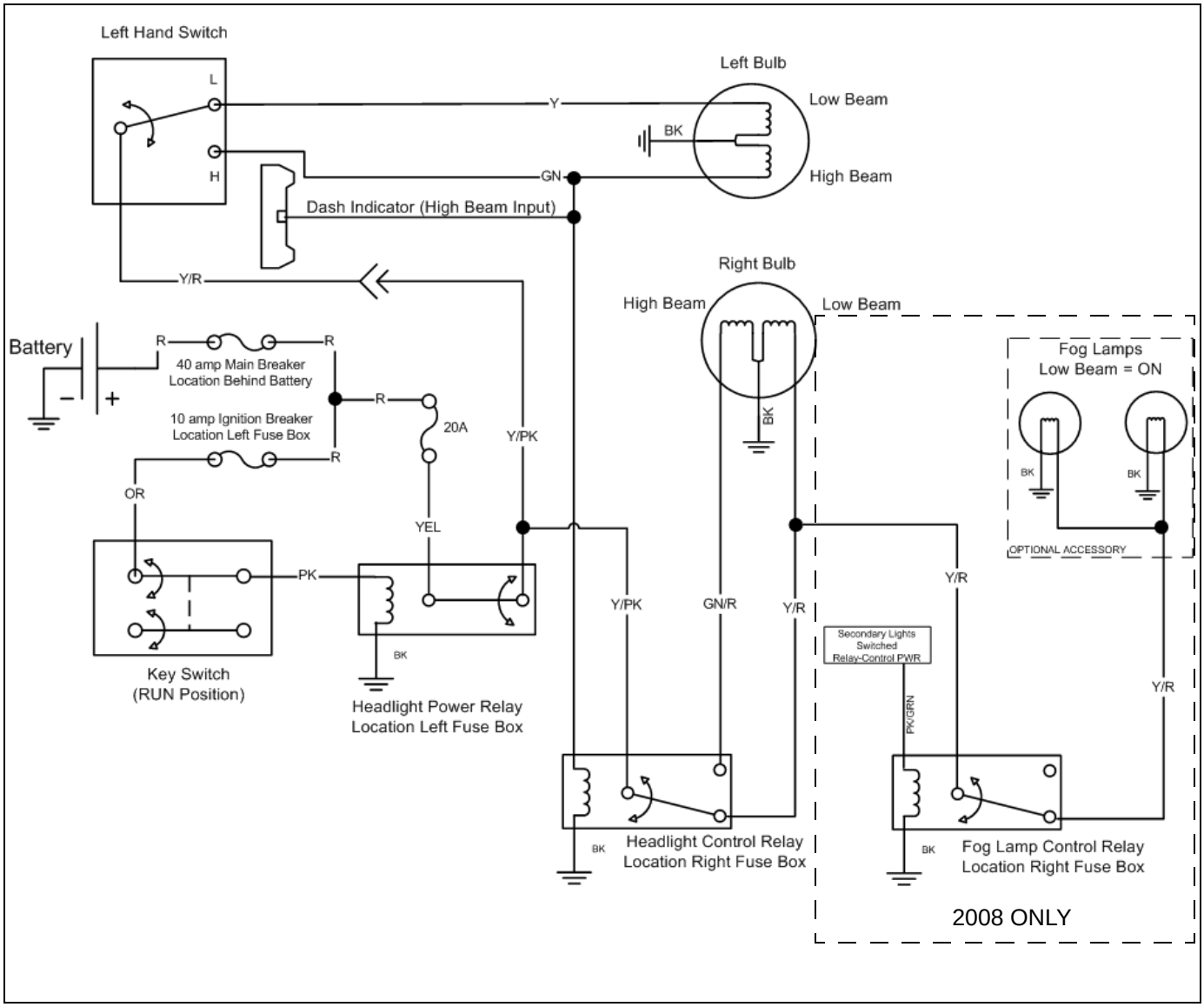

© 2009 Polaris Sales Inc.

HEADLIGHT CIRCUIT - HIGH BEAM (2008-2010)

The starter button must be pressed to power the headlight circuit on 2009-2010 models.
See “HEADLIGHT POWER AND CONTROL RELAY OPERATION (2009-2010)” on page 19.6 for operation of the power and control relay.

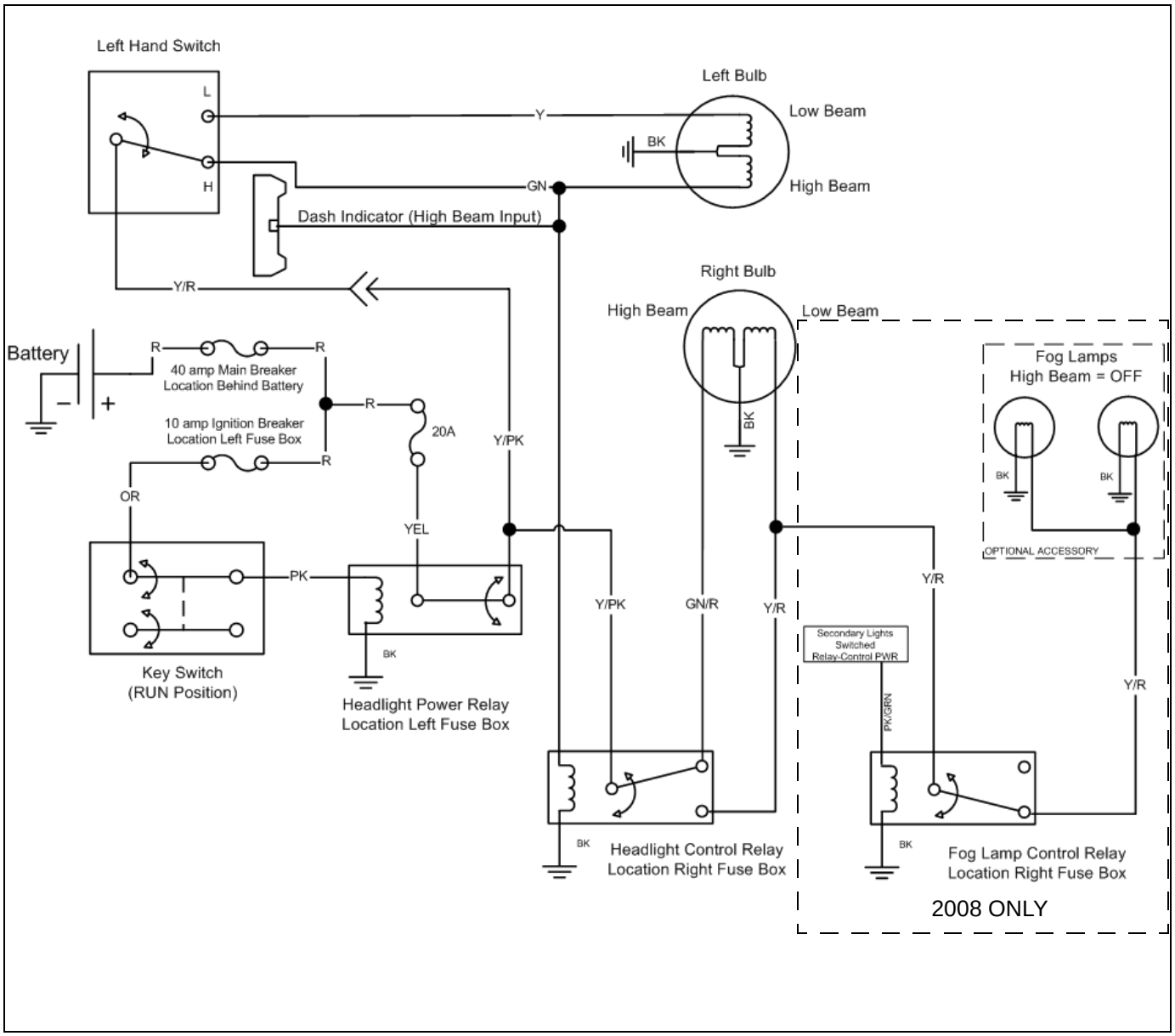

© 2009 Polaris Sales Inc.

HEADLIGHT POWER AND CONTROL RELAY OPERATION (2009-2010)

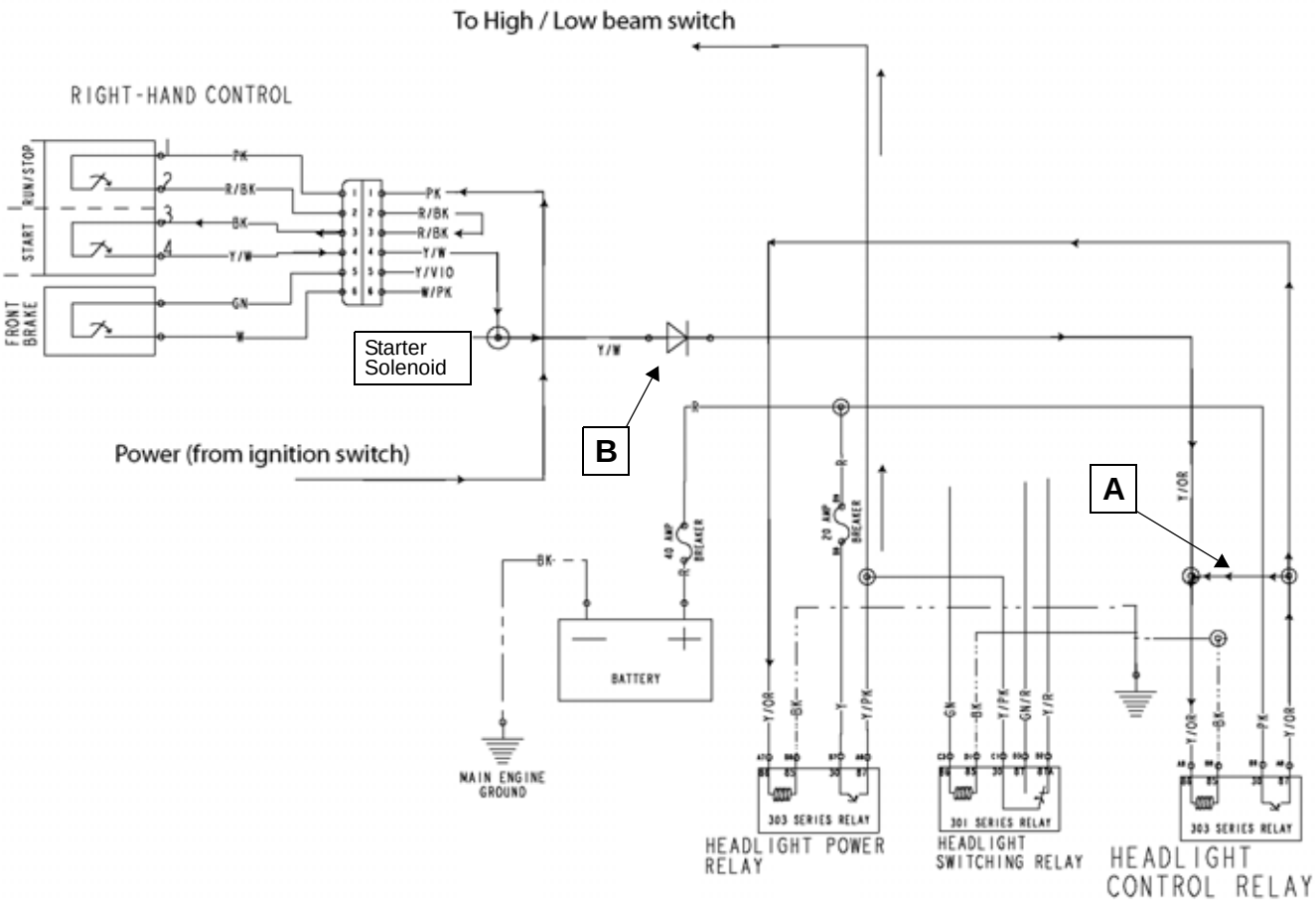

2009-2010 Models - The starter button must be pressed to power the headlight circuit.

When the starter button is pressed, the pull-in coil of the Headlight Control Relay stays energized by the output current (A).

The diode (B) prevents current back flow through the starter solenoid circuit when the relay is energized.

© 2009 Polaris Sales Inc.

TURN SIGNAL SYSTEM (2008)

TURN SIGNAL SYSTEM WIRING DIAGRAM (2008)

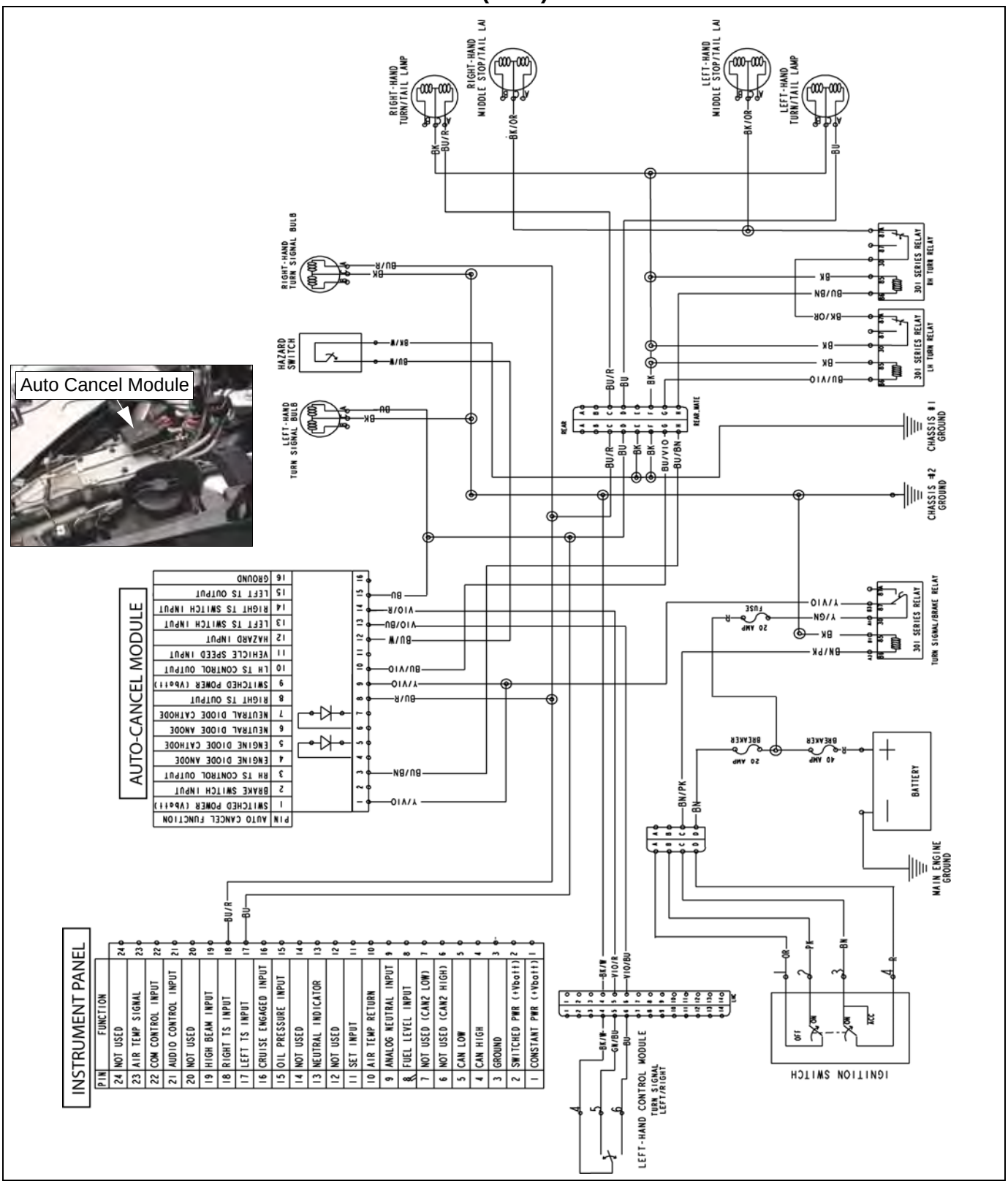

© 2009 Polaris Sales Inc.

TURN SIGNAL AUTO CANCEL MODULE OVERVIEW (2008)

AUTO CANCEL MODULE INPUT / OUTPUT - 2008			
Pin Number	**Function / Name**	**Wire Color**	**Overview of Operation (See page 19.12 for 2009-2010 module)**
1	Switched Power	Y / VIO	Switched battery voltage supplied by turn signal / brake relay.
2	Brake Input Power (+12Vdc)	W / PINK	When the front or rear brake is applied, the module receives power on this wire from the brake switch(es).
3	RH Turn Relay	BLUE / BRN	Supplies power to rear RH turn signal relay. Module powers relay whenever the left or right turn signals are activated. When the relay is powered, the rear middle marker lamp ground circuits are opened and the marker lamps turn off. This action visually separates the upper turn signal lamp from the bottom brake lamp.
4	ECM Protection Diode Input	Violet	+12Vdc side of ECM Protection Diode. Prevents voltage spikes to ECM.
5	ECM Protection Diode Output	VIO / WHITE	“Negative” side of ECM Protection Diode. Prevents voltage spikes to ECM.
6	Neutral Light Diode Input	BLUE /YEL	Grounded when clutch lever switch is closed so engine can be stared in gear when lever is pulled in. Diode prevents neutral light from illuminating when clutch lever is pulled in with transmission in gear.
7	Neutral Light Diode Output	BK / PINK	Ground path through neutral light switch when transmission is in neutral.
8	Right Turn Signal Output	BLUE / RED	Module sends power to the right turn signals on this wire when RIGHT turn is selected (module pin 14 receives a ground from the turn signal switch) or when HAZARD switch is on (module pin 12 grounded by hazard switch).
9	Switched Power	Y/VIO	Switched battery voltage supplied by turn signal / brake relay.
10	LH Turn Relay	BLUE / VIO	Supplies power to rear LH turn signal relay. Module powers relay whenever the left or right turn signals are activated. When the relay is powered, the rear middle marker lamp ground circuits are opened and the marker lamps turn off. This action visually separates the upper turn signal lamp from the bottom brake lamp.
11	Speed Sensor Input	GRN / BLU	0-1700 Hz Square Wave, 0-12Vdc received from speed sensor for vehicle speed / cancel information.
12	Hazard Switch Input	BLU / WHT	This wire is grounded through the hazard switch when the switch is closed, and the module flashes all turn signals (through pin 8 and pin 15).
13	Left Turn Signal Switch Input	VIO / BLU	This wire is grounded when the left turn signal switch is closed (left turn selected). The module flashes LH signals through pin 15.
14	Right Turn Signal Switch Input	VIO / RED	This wire is grounded when the right turn signal switch is closed (right turn selected). The module flashes RH signals through pin 8.
15	Left Turn Signal Output	BLUE	Module sends power to the left turn signals on this wire when LEFT turn is selected (module pin 13 receives a ground from the turn signal switch) or when HAZARD switch is on (module pin 12 grounded by hazard switch).
16	Module Ground	BLK / WHT	Grounds the module.

NOTE: When the turn signal manual cancel button is pushed, both left and right turn signal inputs (Pins 13 and 14 of the module) are grounded at the same time. The module cancels output on pin 13 and 14 when a cancel command is received.

© 2009 Polaris Sales Inc.

AUTO CANCEL TURN SIGNAL SYSTEM SELF-DIAGNOSTICS - 2008

The auto cancel module on 2008 models (located under the console) contains a self-diagnostic feature. The self-diagnostics can be activated to run a test of the turn signal circuits, turn signal switch (left handlebar switch), and the auto-cancel module power supply.

To enter the diagnostic mode:

1. Turn ignition key OFF.
2. Turn hazard switch ON.
3. Turn ignition key ON.
4. Pull and release the front brake lever (or rear brake pedal) 3 times within a 3 second period to enable the diagnostic mode.
   - All 4 turn signal bulbs will illuminate for 1 second and then go out, to indicate the diagnostic mode has been enabled. (Only bulbs in working order will illuminate)
   - The “blink codes” now start flashing on the rear turn signal bulbs.

Notes about the blink codes:

- Refer to the chart on page page 19.10 for a list of codes and what they mean.
- Code 12 will *always* be present; alone if there are no faults in the system, or with other codes following if there is a fault. Code 12 marks the beginning of the code display sequence.
- There is a 2 second pause between blinked codes.
- Each code will blink twice before the next code is displayed. Example: If a code 13 is present, the indicator lamp will flash code 12 (1 long pulse, then 2 short), then repeat the code 12, then code 13, and repeat code 13.
- The blink codes will flash until cancelled by turning the key OFF or by turning the hazard switch OFF. Turning the hazard switch OFF before turning the key OFF will change the diagnostic mode to the next level, which is “Turn Signal Switch” diagnostic mode.

Turn Signal Switch Mode:

5. Perform Steps 1-4 to enter the diagnostic mode.
6. When codes are blinking on rear turn signals, turn the hazard switch OFF. The system will finish the code display sequence then enter the Turn Signal Switch diagnostic mode.

Turn Signal Switch Tests:

7. Move the turn signal switch to the LEFT TURN position and HOLD. Both left turn signal lamps should light.
8. Move the turn signal switch to the RIGHT TURN position and HOLD. Both right turn signal lamps should light.
9. Push the switch in to the CANCEL position. All 4 turn signal lamps should light, indicating the cancel switch is working properly.

© 2009 Polaris Sales Inc.

TURN SIGNAL DIAGNOSTIC BLINK CODES - 2008

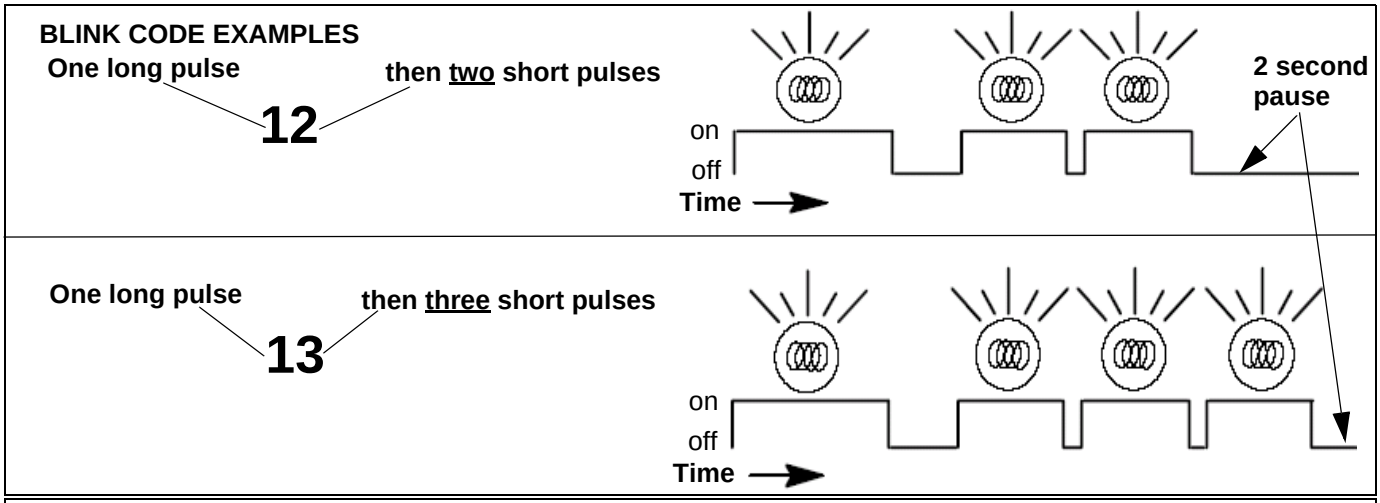

BLINK CODE TABLE

NOTE: Fault codes (13 and above) will only appear when actually present. A separate "code clearing" operation is not required. When a problem is corrected, the code will not be displayed when the sequence repeats.

CODE	Code Description / Possible Cause	Diagnostic Steps
12	Self Check Complete	Normal - always displayed as first code
13	Left Hand Circuit Over-Current *Possible Causes:* Shorted bulb (filament has shorted across filament posts) Action: replace bulb. Short to ground at socket or in related wiring. System will interrupt power to the shorted circuit. Left side bulbs will not be illuminated. Action: Determine front or rear. Inspect wiring.	To determine if front or rear left signal circuit is at fault: 1) Remove seat. 2) Disconnect rear wire harness 8-pin connector. 3) If code 13 is no longer displayed, cause of overcurrent is in *rear* left signal unit or circuit. If code 13 remains, fault is in *front* left signal unit or circuit. IMPORTANT: The system will now detect undercurrent due to the open rear connector, and display code 14 and code 16. These codes will disappear after rear harness is re-connected.
14	Left Hand Circuit Under Current (Open Bulb, No Bulb, faulty connection, etc.)	Inspect / replace bulb; inspect socket or connections to bulb that is not lit.
15	Right Hand Circuit Over-Current Possible Causes: Shorted bulb (filament has shorted across filament posts) Action: replace bulb. Short to ground at socket or in related wiring. System will interrupt power to the shorted circuit. Right side bulbs will not be illuminated. Action: Determine front or rear. Inspect wiring.	To determine if front or rear right signal circuit is at fault: 1) Remove seat. 2) Disconnect rear wire harness 8-pin connector. 3) If code 15 is no longer displayed, cause of overcurrent is in *rear* right signal unit or circuit. If code 15 remains, fault is in *front* right signal unit or circuit. IMPORTANT: The system will now detect undercurrent due to the open rear connector, and display codes 14 and 16. These codes will disappear after rear harness is re-connected.
16	Right Hand Circuit Under Current (Open Bulb, No Bulb, faulty connection, etc.)	Inspect / replace bulb; inspect socket or connections to bulb that is not lit.
17	Low Module Voltage	Check for battery voltage to module (Pin 9, Violet) (Must be ≥12 VDC)
18, 19, & 20	Not Used	N/A

© 2009 Polaris Sales Inc.

TURN SIGNAL SYSTEM (2009-2010)

TURN SIGNAL SYSTEM DIAGRAM (2009-2010)

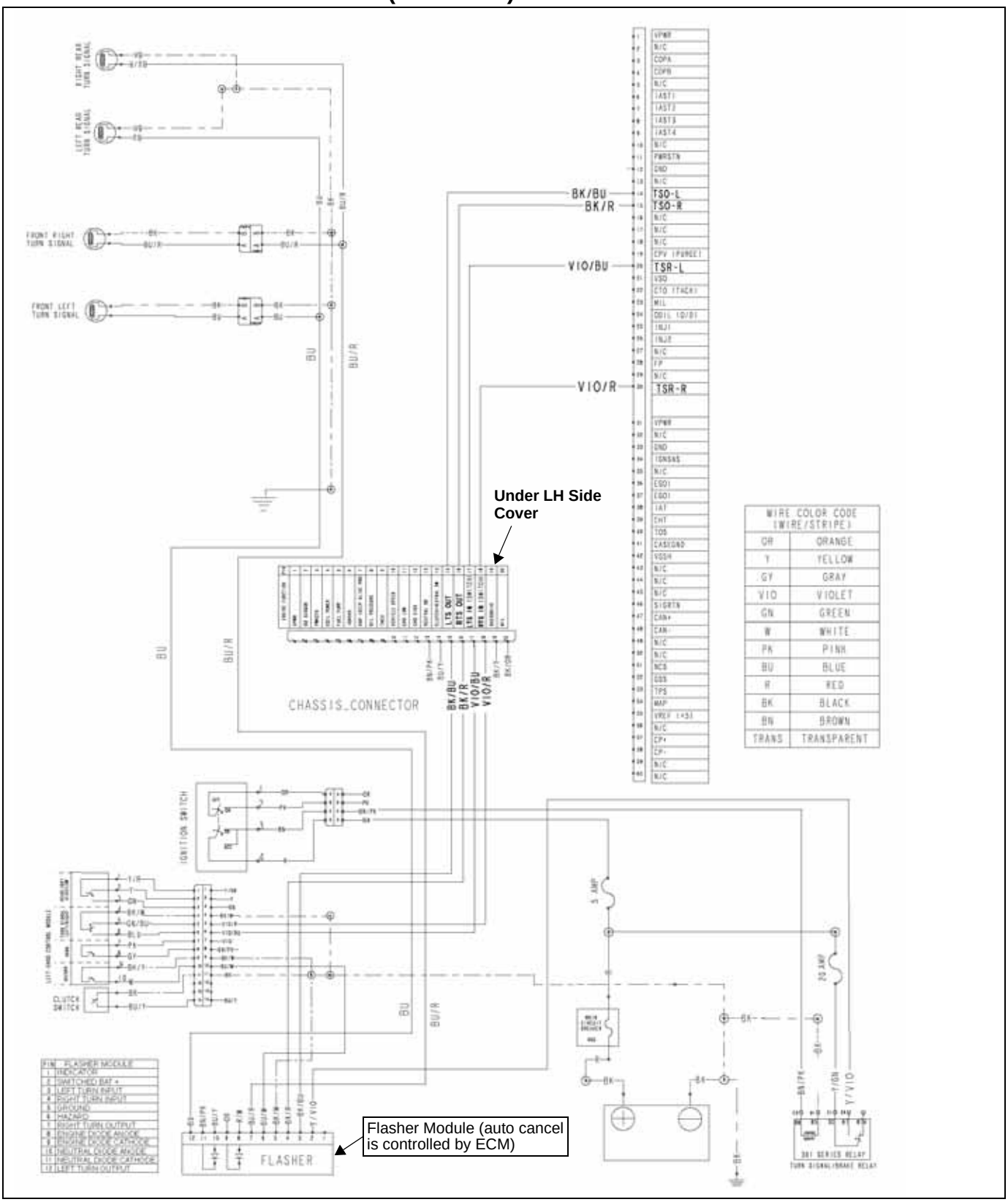

© 2009 Polaris Sales Inc.

TURN SIGNAL FLASHER MODULE (2009-2010)

On 2009-2010 models, auto-cancel turn signal functions are performed in the ECM, not in the Auto Cancel Module as on 2008 models. The 12 pin module (was 16 pin on 2008) is used to flash the turn signal and hazard circuits, and also contains clutch circuit and ECM protection diodes (see wiring diagram). The flasher module is located under the console.

2009-2010 FLASHER MODULE INPUT / OUTPUT			
Pin Number	**Function / Name**	**Wire Color**	**Overview of Operation**
1	Turn Signal Indicator Light Output	-	(This pin not used)
2	Switched Power Input (+12Vdc)	VIOLET	+12Vdc From turn signal / brake relay. Supplies battery voltage to module.
3	Left Turn Input	BLACK / BLUE	From Pin 14 of ECM. (Through Pin 15 of Chassis-to-Engine Harness Connector).
4	Right Turn Input	BLACK / RED	From Pin 15 of ECM. (Through Pin 16 of Chassis-to-Engine Harness Connector).
5	Ground	BLACK / WHITE	Flasher Module Ground.
6	Hazard Switch Input	BLUE / WHITE	This wire is grounded through the hazard switch when the switch is closed, and the module flashes all turn signals (module outputs 12V to Pin 7 and Pin 12).
7	Right Turn Signal Output	BLUE / RED	Flasher Module sends power to right turn signals on this wire when it receives RH turn signal (ground) input from ECM on Pin 4 (BK/R).
8	Engine Diode Anode	VIOLET	“Negative” side of ECM Protection Diode. Prevents voltage spikes to ECM.
9	Engine Diode Cathode	VIOLET / WHITE	+12VDC side of ECM Protection Diode. Prevents voltage spikes to ECM.
10	Neutral Light Diode Anode	BLUE / YELLOW	Grounded when clutch lever switch is closed so engine can be started in gear when lever is pulled in. Diode prevents Neutral light from illuminating when clutch lever is pulled in with transmission in gear.
11	Neutral Light Diode Cathode	BLACK / PINK	Ground path through neutral light switch when transmission is in neutral.
12	Left Turn Signal Output	BLUE	Flasher Module sends power to left turn signals on this wire when it receives LH turn signal input (ground) from ECM on Pin 3 (BK/BU).

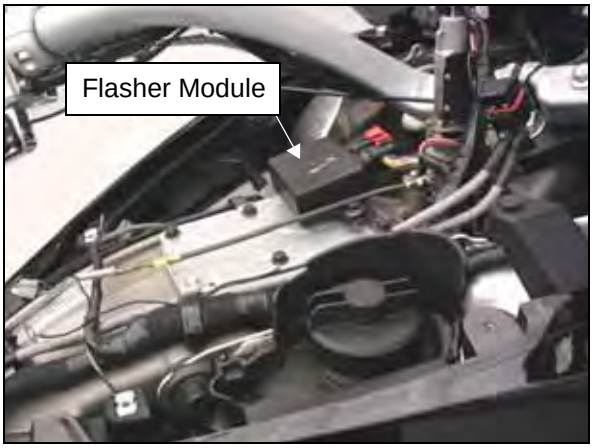

© 2009 Polaris Sales Inc.

SPEEDOMETER

SPEEDOMETER

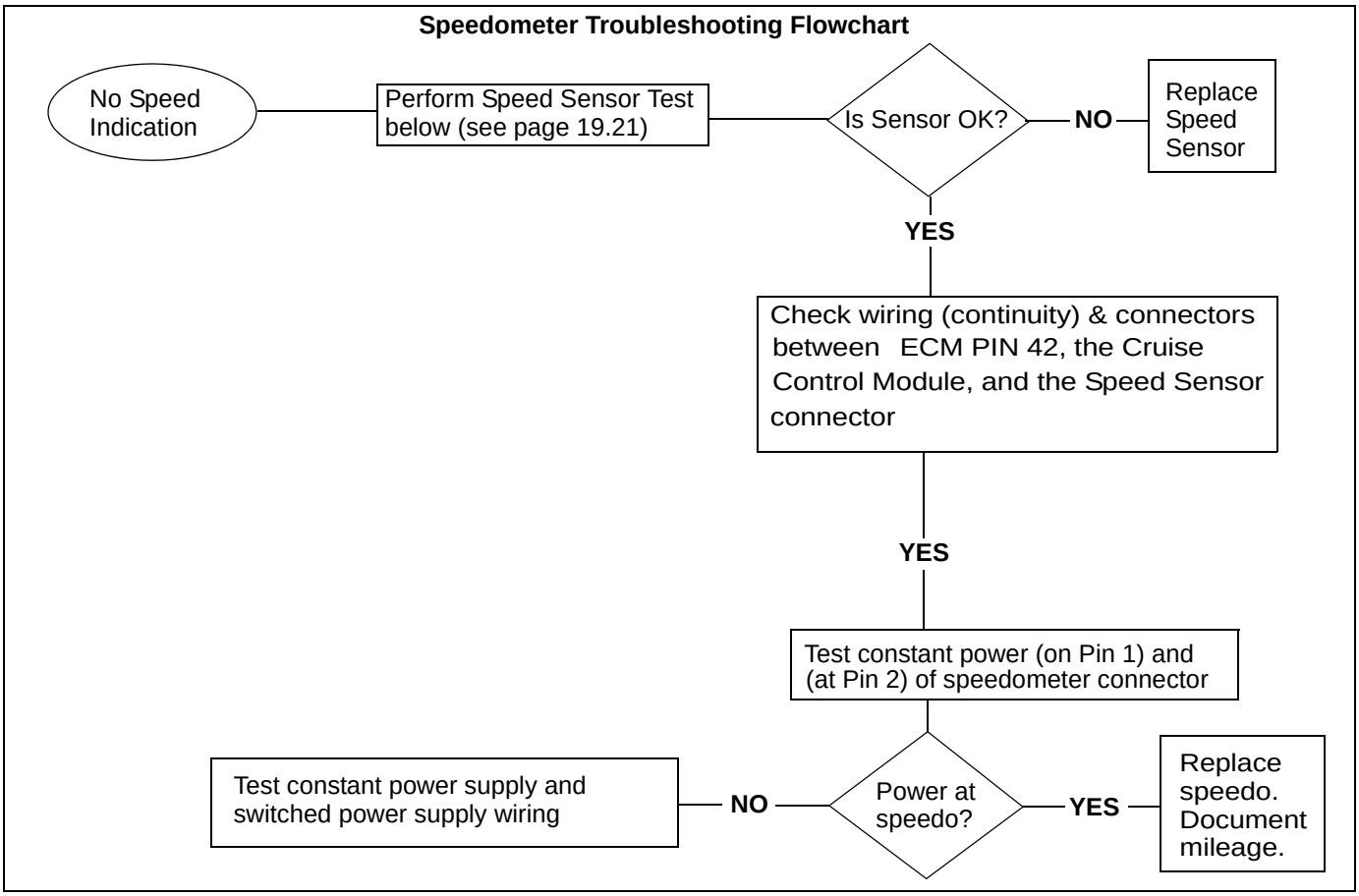

SPEED SENSOR TEST

The speed sensor can be tested using the Cruise Control System Switch Diagnostics (page 19.19). You must perform the entire test in proper sequence to complete the speed sensor portion (Test 5).

NOTE: The signal from the speed sensor is supplied to the ECM on Pin 42, and distributed or used by the ECM to operate the speedometer, the cruise control module, and the auto cancel feature of the turn signal system. If any one of these components is functioning properly (for example, the speedometer works, the turn signals cancel normally, or the cruise control will accept a set speed) then the speed sensor itself is functional and supplying a signal to the ECM. Diagnostics should be focused on the non functional circuit, not on the speed sensor itself.

© 2009 Polaris Sales Inc.

SWITCH TESTING

REAR BRAKE LIGHT SWITCH TEST

1. Remove electrical cover.

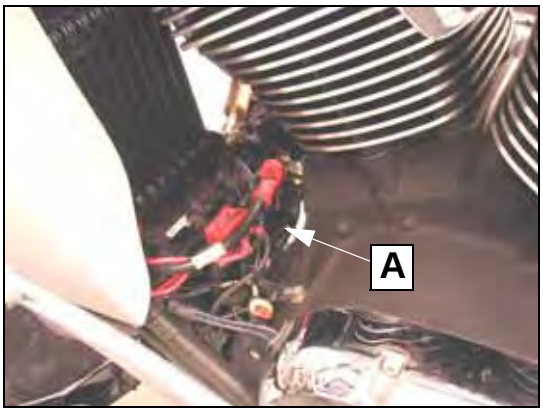

2. Disconnect the rear brake light switch wires (A). The switch is located just below the starter solenoid.
3. Connect ohmmeter to switch contacts and test for good continuity through switch when rear brake is applied.

SPECIFICATION: Continuity When Brake Applied

FRONT BRAKE LIGHT SWITCH TEST

1. Disconnect wires (B) from switch.
2. Connect ohmmeter to switch contacts and test for good continuity through switch when front brake is applied.

SPECIFICATION: Continuity When Brake Applied

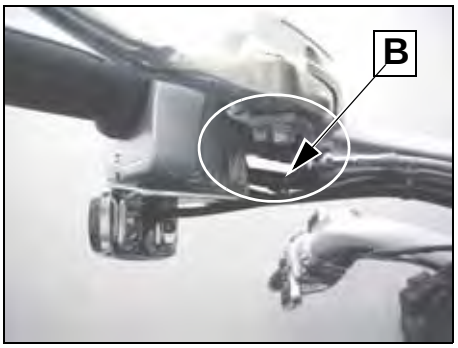

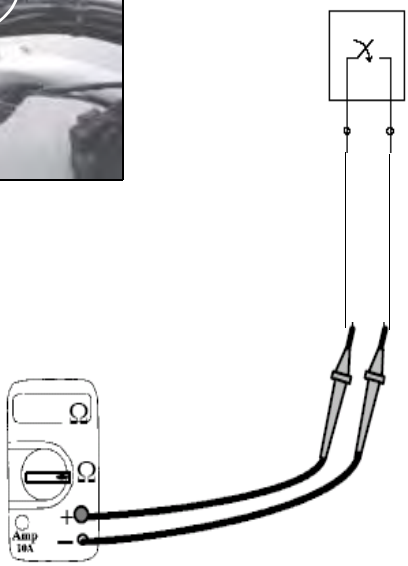

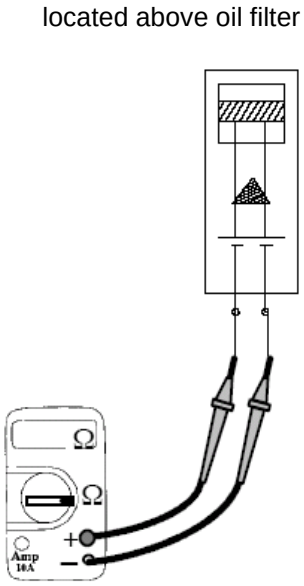

© 2009 Polaris Sales Inc.

CLUTCH SWITCH TESTING

1. Refer to page 18.9 to test the clutch switch and circuit.

GEAR POSITION SWITCH TESTING

1. Refer to bench testing (page 19.16) if switch is removed.
2. Remove side covers (page 3.27).
3. Disconnect gear position switch 2 pin connector.

4. Perform the resistance tests in the table below and compare results.
5. 2008-2009: Ground path for the switch is through the shift drum detent roller. Wait for the reading to stabilize before recording the resistance in each gear. It may be necessary to shift multiple times into and out of the gear being tested in order to get a stable resistance reading.

   2010: Ground path is through switch to ground wire and then the case.

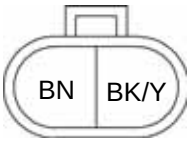

View from open end of connector

TABLE 1 - TESTING NEUTRAL SIDE OF GEAR POSITION SWITCH (Switch Installed)			
Gear	**Meter lead connections (switch side of unplugged connector)**		**Ohmmeter Reading***
	RED LEAD (+)	BLACK LEAD (-)	+/- 20%
Neutral	Brown	Crankcase (Ground)	≤ 1.0 Ω
Any gear (except Neutral)	Brown		∞ (OL or “overload”)
* Subtract meter lead resistance from result			

TABLE 2 - TESTING GEAR INDICATOR SIDE OF GEAR POSITION SWITCH (Switch Installed)				
Gear	**Meter lead connections (switch side of unplugged connector)**		**Resistance: 2008-2009 Models**	**Resistance: 2010 Models**
	RED LEAD (+)	BLACK LEAD (-)	+/- 10%	+/- 10%
1ST	Black / Yellow	Crankcase Ground	330 Ω	470 Ω
Neutral			∞ (or “OL”)	DIODE CHECK function. Continuity one way and no continuity with leads reversed.
2ND			825 Ω	1750 Ω (1.75 KΩ)
3RD			1500 Ω (1.5 KΩ)	2860 Ω (2.86 KΩ)
4TH			2740 Ω (2.74 KΩ)	4710 Ω (4.71 KΩ)
5TH			6810 Ω (6.81 KΩ)	7242 Ω (7.24 KΩ)
6TH			15,000 Ω (15.0 KΩ)	13,950 Ω (13.95 KΩ)

© 2009 Polaris Sales Inc.

GEAR POSITION SWITCH REMOVAL

Removal / Bench Test

1. Remove mufflers (page 3.47).

2. Loosen head pipes (page 3.48) and move outward until drive sprocket cover can be removed. Complete head pipe removal is not required.

3. Remove switch screws and wire harness clamps.

4. Remove switch.

5. Test each switch contact to the BK/Y wire in the connector as shown below and compare to resistance table on page 19.15.
   NOTE: On 2010 models, also test the ring terminal (BK wire) to center contact of switch.

6. If switch resistance is within specified range, inspect the spring and plunger (Step 7).

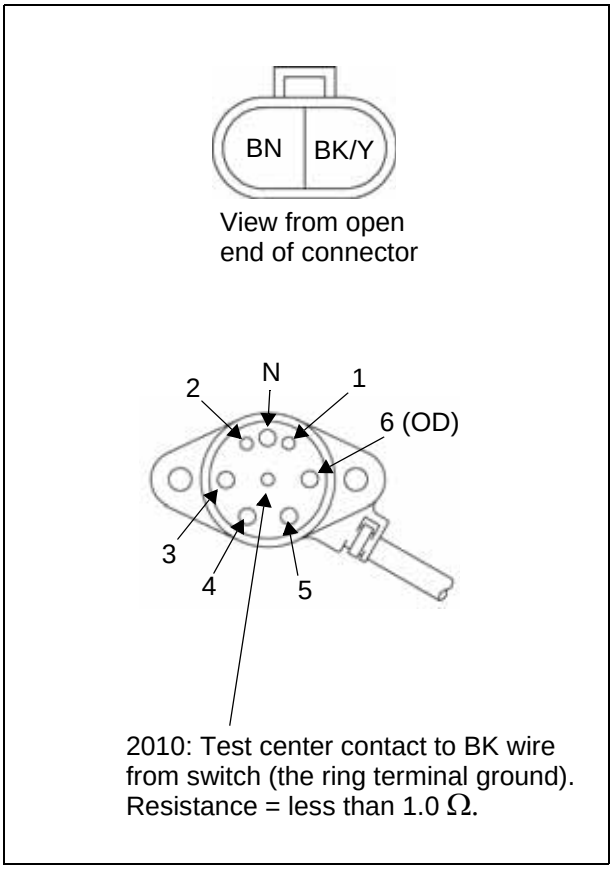

7. Remove and inspect each spring and plunger.

8. 2008-2009: Test the ground path between the spring hole in the shift drum and engine ground (to a good ground on crankcase. Resistance should be less than one Ohm. Ground path is through shift drum to shift star and detent roller to crankcase ground.

   2010: Ground path is through center switch contact to BK wire to crankcase ground.

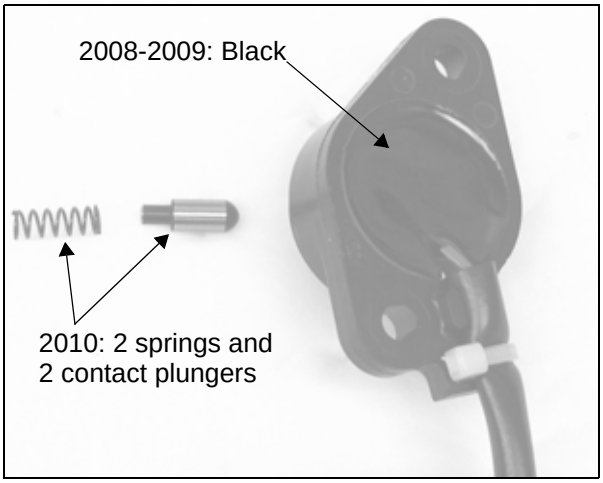

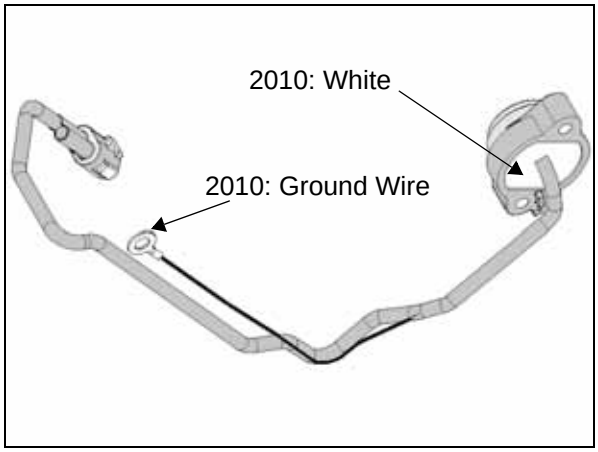

Installation

1. Replace sealing O-ring on switch body and lubricate with a light film of grease.

2. Clean sealing surface on crankcase.

3. Install switch.

4. Torque mounting screws to 4.9 Nm (43 lb-in).

5. Install wire harness clamps to crankcase. Torque mounting screws to 87 lb-in.

© 2009 Polaris Sales Inc.

CRUISE CONTROL

OPERATION OVERVIEW - SETTING SPEED

Review *Cruise Control Safety & Operation* in the Rider's Manual before operating the Cruise Control.

To set the cruise control (if equipped):

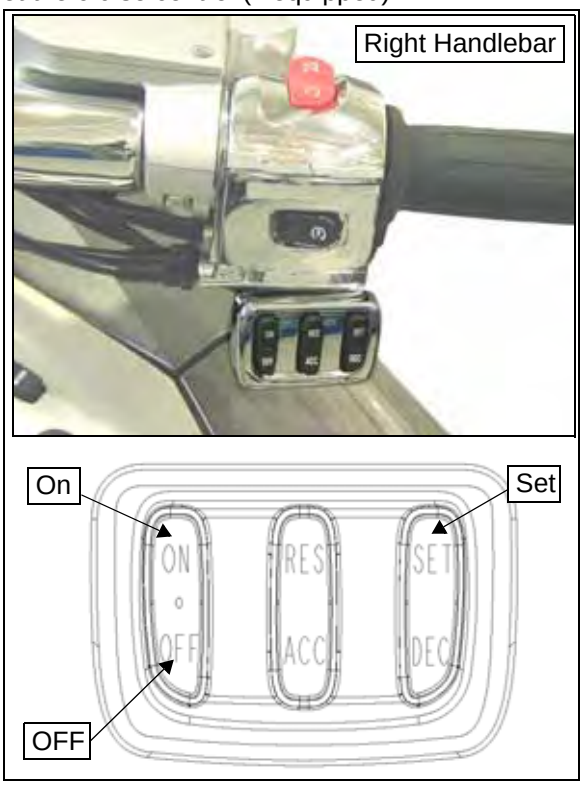

1. Press the ON button to activate Cruise Control.
2. Accelerate to desired speed and press SET button. This speed will be logged in memory.
3. The CRUISE indicator lamp on the instrument cluster will illuminate.

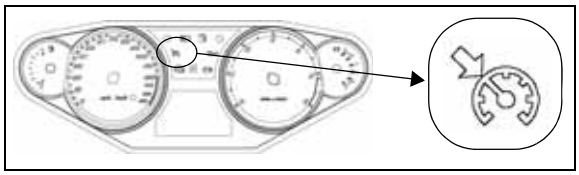

- Cruise control can be set in any gear.
- The cruise control can be activated between speeds of 25-95 mph (40-153 kph).
- Set speed will vary slightly in hilly terrain.
- The cruise control will not resume a pre-set speed if the resulting accel / decel rate is too high or too low. Example: If you are in 6th gear and try to resume a set speed from 40mph, the cruise may disengage.
- Brake lights must be working properly.

4. Push the OFF button to turn the cruise control system off and erase the memory set speed.

OPERATION OVERVIEW - RESUME / ACCELERATE

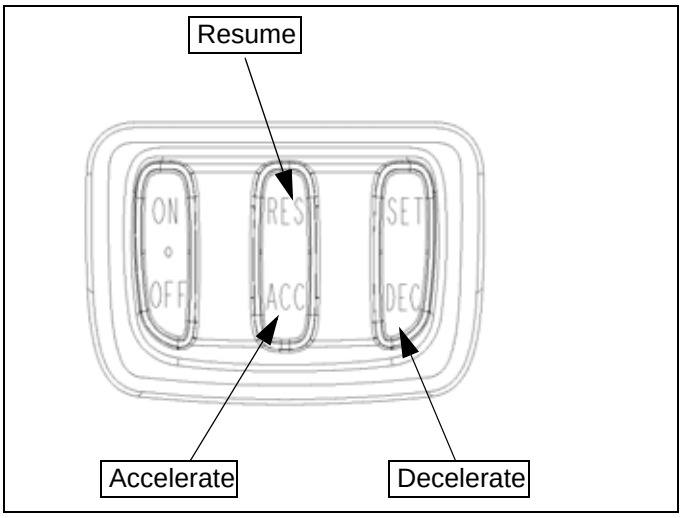

RESUME

Pressing the Resume button (RES) will reset the cruise to the memorized speed after braking or disengaging the cruise control with either brake, throttle, or clutch.

NOTE: Pressing the cruise control OFF button will erase the SET speed from memory and disengage the cruise control.

ACCELERATE

Press and release (tap) the Accelerate (ACC) button to increase speeds in approximately 1 mph increments. Press and hold the ACC button to accelerate the vehicle to a new SET speed until released, or until a maximum increase of approximately 10 MPH is achieved (whichever comes first).

NOTE: If you use throttle to accelerate and then release it, cruise will resume original SET speed.

OPERATIONAL OVERVIEW - DECELERATE / CANCEL

DECELERATE

Press and release (tap) the Decelerate (DEC) button to decrease speeds in approximately 1 mph increments. Press and hold the DEC button to reduce SET speed to desired speed, then release to enter a new SET speed. If you hold the DEC button, the vehicle continues to decelerate to the 25 MPH minimum cruise speed.

TO CANCEL THE CRUISE CONTROL

To cancel the cruise control, do one of the following:

- Apply the front or the rear brake or both.
- Close the throttle completely with the twist grip.
- Pull the clutch lever in.
- Turn the cruise control master switch to OFF.

NOTE: Pressing the OFF button will erase the SET speed from memory.

© 2009 Polaris Sales Inc.

CRUISE CONTROL DIAGNOSTIC BLINK CODES (OVERVIEW)

The eight most recent causes for cruise control disengage ("drop out") are stored in the cruise control module memory. Each cause is assigned a diagnostic blink code consisting of three primary digits, which can be viewed on the instrument cluster by watching the cruise indicator lamp. Each digit is flashed with .25 seconds between flashes and a 1 second delay between primary digits.

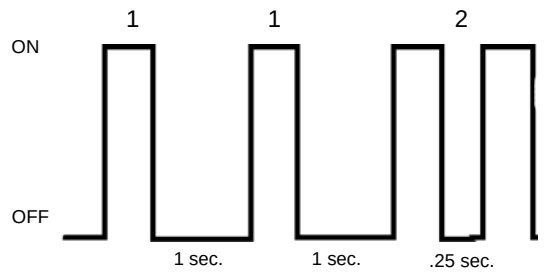

EXAMPLE OF FLASH CODE = 112

1. With the ignition key in the OFF position, press and HOLD the SET button.
2. Turn the ignition key to the RUN position. Do not start the engine.
3. Release the SET button on the cruise control handlebar switch. The most recent diagnostic code will begin flashing.
4. Press and release the resume (RES) button to review the code again.
5. To view the next code, press and release the SET button.
6. When all 8 codes have been displayed, the cruise indicator on the instrument cluster will remain illuminated.
7. To exit the diagnostic code lamp flash mode, turn the ignition key to OFF.

CRUISE CONTROL DISENGAGE CODES

FLASH SEQUENCE	DESCRIPTION
111	Initial state / No dropout
112	Throttle grip at zero (throttle cable switch)
113	ON - OFF state (OFF button pressed)
121	Cancel Disengage - SET and RESUME buttons pushed simultaneously.
122	Brake Lamps (Brake switch disengage)
211	Coast (DEC) Disengage
212	Low Speed Inhibit Disengage
213	Hi speed, Low speed, or overspeed disengage
221	Underspeed disengage
222	Hi acceleration / deceleration speed disengage
223	Loss of vehicle speed sensor
231	High RPM Disengage
232	Loss of RPM signal
242	High rate of RPM change detected
311 (or any 300 code)	Some 300 series codes may be displayed until at least 8 disengage codes have been logged. Example: A new motorcycle or if a new module has been installed.

CRUISE MODULE INPUT / OUTPUT

Disconnect harness from module. Test Input / Outputs with a 12V test light or a multimeter and compare to table below.

Cruise Module Wire Harness Connector

PIN	WIRE COLOR	CRUISE CONTROL FUNCTION
A	W / BU	ON / OFF (+12 Vdc)
B	W / OR	SET / COAST INPUT (+12 Vdc)
C	W / VIO	RESUME / ACCEL INPUT (+12 Vdc)
D	W / R	THROTTLE SAFETY SW IN (+12 Vdc)
E	BK	GROUND
F	LB / PK	SWITCHED POWER (+12 Vdc)
G	W / PK	STOP LAMP INPUT (+12 Vdc)
H	GN / W	ENGINE RPM INPUT (TACH SIGNAL FROM PIN 22 of ECM)
J	W / BN	IDICATOR LAMP OUTPUT
K	GN / BU	VEHICLE SPEED INPUT (FROM PIN 21 ECM - Does speedometer work?)

© 2009 Polaris Sales Inc.

CRUISE CONTROL SWITCH DIAGNOSTICS

The sensors and switches that supply information to the cruise control module can be tested to verify proper operation.

NOTE: Test 1 is the only diagnostic test that can be repeated. Repeating any other test will cause the system to exit the diagnostic test mode.

Test 1
(SET / DEC Button)

1. Press and hold the cruise control ON and SET buttons.
2. Turn the ignition key to ON, but do not start the engine. The cruise control indicator should illuminate on the instrument cluster.
3. Release both buttons. Indicator lamp should go out.
4. Press the SET button. The indicator lamp should illuminate. The lamp will go off when the button is released. If the lamp illuminated, the SET / DEC button circuit is functioning properly.

NOTE: Continue to press and release the SET button to repeat the test if desired.

5. Perform Test 2.

Test 2
(Resume / Accelerate Button)

6. Continuing on from Test 1, press the RES / ACC button. The cruise indicator lamp should illuminate.
7. Release the button, and the lamp should go out. If the lamp illuminated, the RES / ACC button circuit is functioning properly.
8. Do not repeat this test. Doing so will exit the system from the diagnostic test mode.
9. Perform Test 3.

Test 3
(Throttle Grip)

10. Continuing from Test 2, close the throttle grip firmly (throttle switch closes). The lamp should illuminate.
11. Release the throttle (throttle switch opens) and the lamp should go off. If the lamp illuminated, the throttle cable switch circuit is functioning properly.
12. Do not repeat this test. Doing so will exit the system from the diagnostic test mode.
13. Perform Test 4.

Test 4
(Brake Switch)

14. Continuing from Test 3, apply the front or rear brake lever. The lamp should illuminate.
15. Release the front or rear brake lever and the lamp should go out. If the lamp illuminated in Step 1 of this test, then went out when the lever was released, the brake switch is functioning properly. NOTE: Only one switch (front or rear) can be tested during one test cycle.
16. Apply the front brake lever for 5 seconds. The lamp will illuminate for 5 seconds, then go out.
17. Release the brake lever and the lamp should illuminate.

NOTE: The cruise control module will cycle the cable stroke briefly which may be felt at the throttle grip. If the actuator does not pull the cable after releasing the brake, there is a problem with the cable or actuator. Proceed to Test 5.

Test 5
(Speed Sensor Input)

18. Roll the motorcycle forward while observing the indicator lamp. If the vehicle speed signal is present, the lamp will flash rapidly for a sufficient test distance (5 to 10 feet / 2 to 3 meters) and then go off.
19. Push the cruise control OFF button.
20. Turn the ignition switch to the OFF position.
21. Perform Test 6.

Test 6
(RPM Signal)

22. Press and hold the RES / ACC button.
23. Turn the ignition key to the ON position while holding the RES / ACC button. The indicator lamp should illuminate. Do not release the RES/ACC button until the following Step is completed.
24. While still holding the RES/ACC button, start the engine. The cruise control indicator lamp should illuminate and flash with the RPM pulses until button is released.

NOTE: Starting the engine may cause the system to exit the diagnostic mode if the battery voltage drops too low during cranking.

25. Turn the ignition key to the OFF position. All tests are complete.

© 2009 Polaris Sales Inc.

CRUISE CONTROL CABLE REPLACEMENT

NOTE: Always perform the "Lash Learn" procedure after replacing the cruise control cable.

1. Locate cruise control module under the seat.

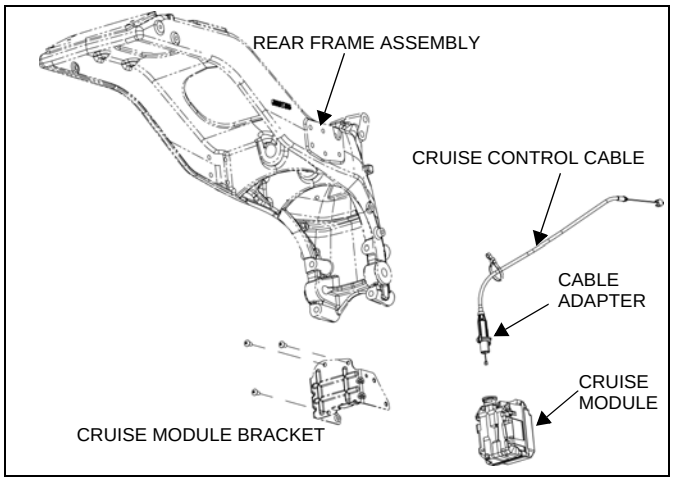

2. To remove cable, grasp and firmly turn cable adapter counterclockwise.

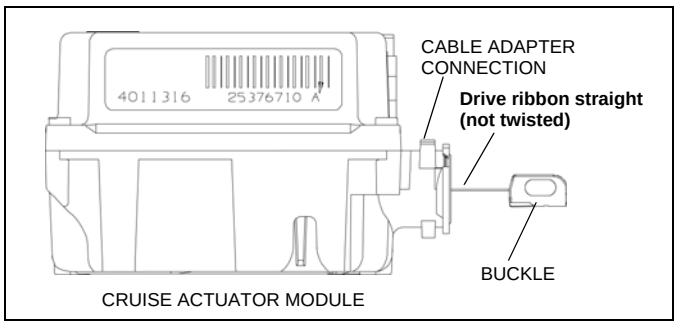

3. Pull adapter back to reveal cable buckle. Remove cable from buckle.

4. Remove tie strap securing cable to frame.

5. Locate cruise control cable at throttle body.

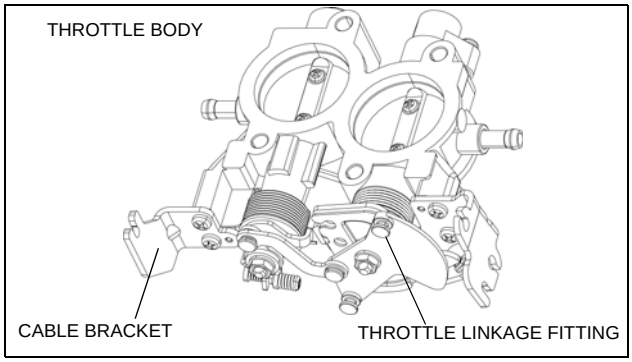

6. Disconnect cable from bracket and throttle linkage fitting.

7. Install a new cruise control cable using same routing and tie strap locations. Verify cable snaps securely into place on bracket.

8. **Be sure drive ribbon is straight as shown in Step 2 (not twisted). Connect cable to buckle.**

9. Pull throttle body end of cable to draw cable adapter toward module. The buckle must slide freely into cable adapter.

10. Install cable adaptor in module.

11. If module was removed from bracket, torque fasteners to 10 lb-ft. (12 Nm).

12. Perform "Lash Learn" procedure (page 19.15).

© 2009 Polaris Sales Inc.

CRUISE CONTROL CABLE "LASH LEARN" PROCEDURE

The cruise control actuator cable has no manual cable free play adjuster, so a "Lash Learn" procedure must be initiated by the Victory technician. This simple, automated process allows the cruise control module to take up any slack in the cruise cable which will ensure a smooth transition to SET speeds, and quicker reaction to changes in load (hills) and speeds. Perform the following procedure:

- After installing an accessory Cruise Control kit.
- After replacing any component that affects cruise control cable free play (cruise cable, cruise module, or throttle body assembly).

Failure to perform this procedure could result in erratic cruise control operation such as "hunting" around a SET speed or a sluggish reaction to load and speed changes.

NOTE: Performing the "lash learn" procedure is not required when adjusting or replacing the throttle open / close cables. The Lash Learn procedure can be performed at any time and multiple times without causing any problems.

1. With engine at operating temperature, turn ignition key OFF.

2. Place transmission in NEUTRAL.

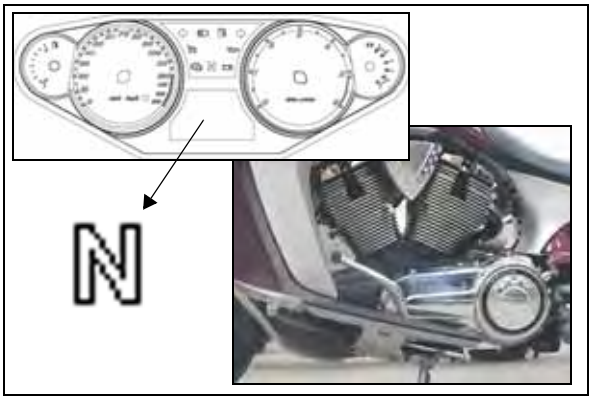

3. PRESS and HOLD both Resume (RES) and ON buttons on cruise control switch.

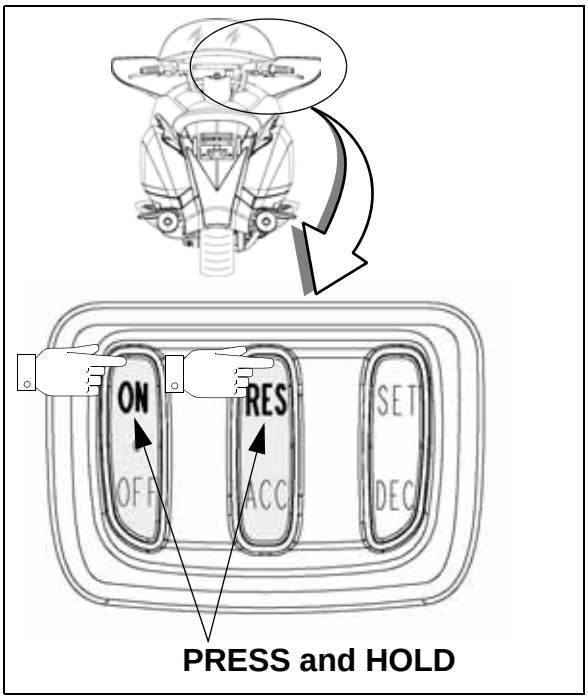

4. Turn ignition key ON (while holding Resume and ON buttons).

5. Continue to HOLD both Resume (RES) and ON buttons and START THE ENGINE.

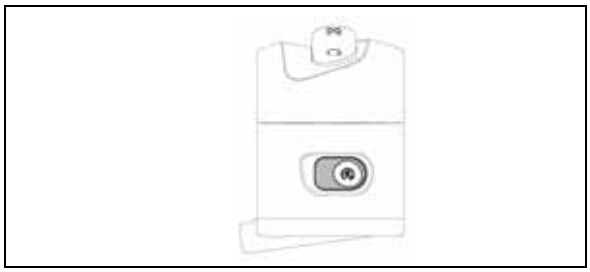

© 2009 Polaris Sales Inc.

6. After engine starts, watch cruise indicator lamp on indicator display until it turns OFF. (If indicator lamp does not illuminate and remain illuminated when the engine starts, repeat steps 1 through 5).

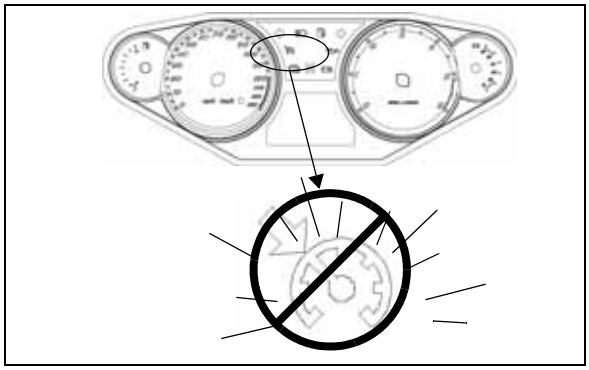

7. When the cruise control lamp turns OFF, RELEASE both Resume and ON buttons.

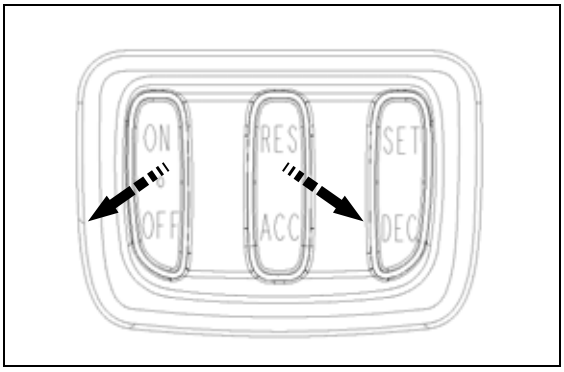

8. PRESS and HOLD the Resume (RES) button. The cruise control indicator lamp should illuminate.

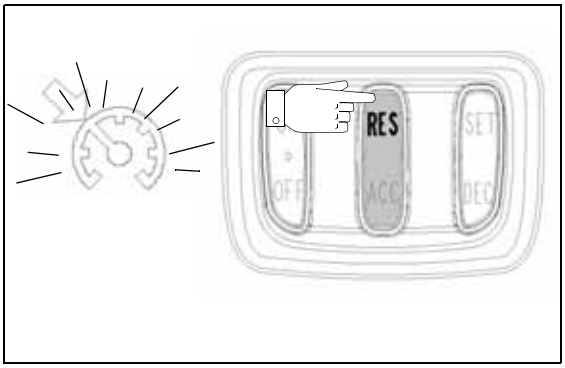

9. Listen for a brief increase in engine RPM as the cruise control module takes up any cable lash (free play) and completes the Lash Learn process. The cruise control lamp will go off during this part of procedure.

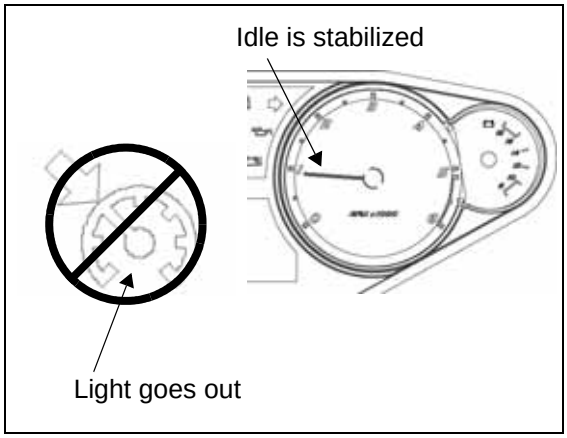

10. When engine RPM drops down to idle speed and the cruise indicator lamp goes out, RELEASE the resume (RES) button.

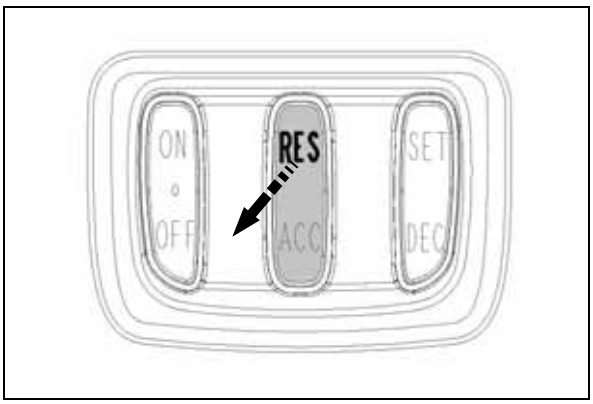

11. Turn the engine off; the process is complete.

12. Test cruise control operation by test riding the motorcycle.

© 2009 Polaris Sales Inc.

HORN RELAY CIRCUITS

SYSTEM DIAGRAM

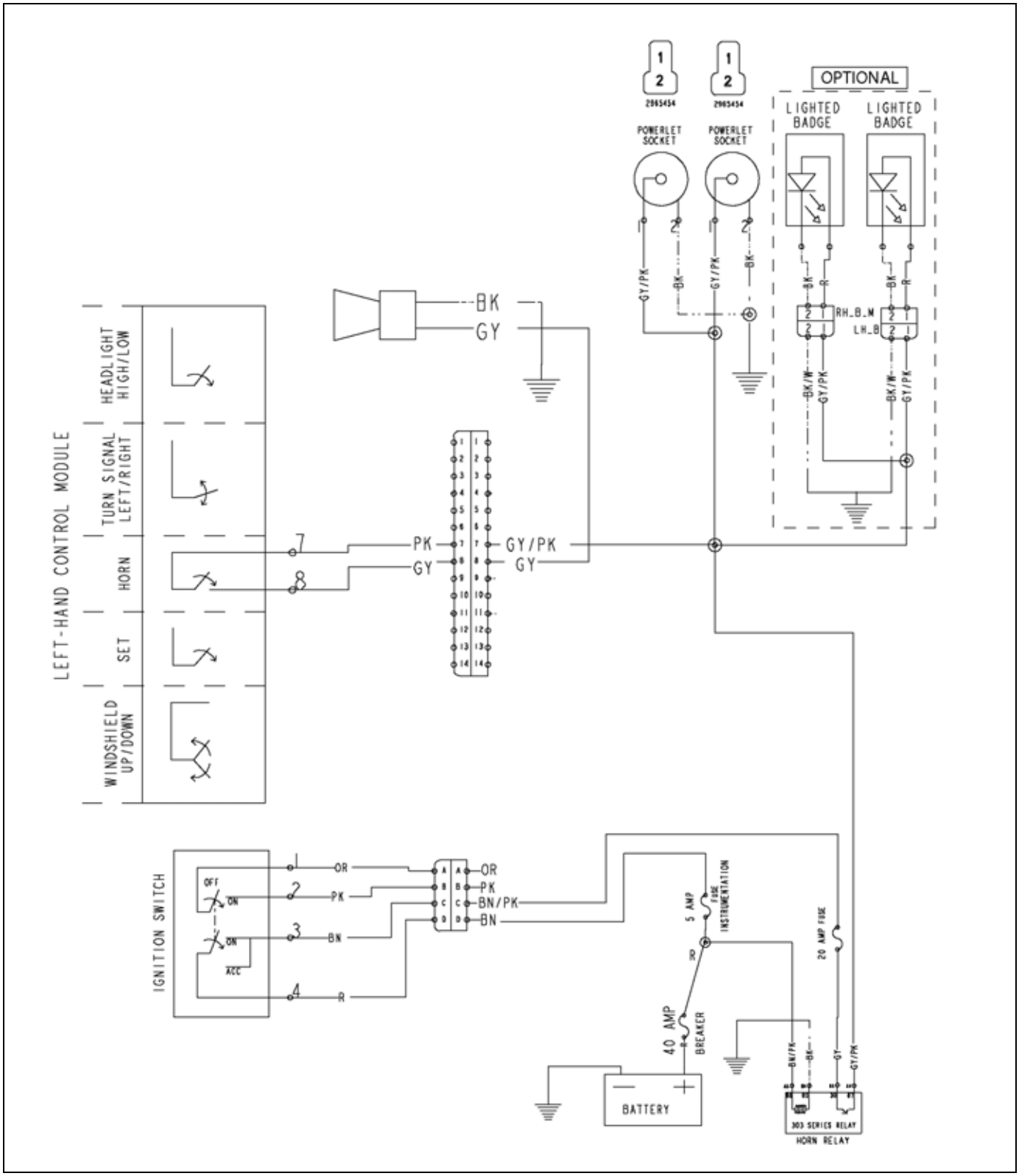

© 2009 Polaris Sales Inc.

WINDSHIELD / TRUNK LAMP CIRCUITS

SYSTEM DIAGRAM

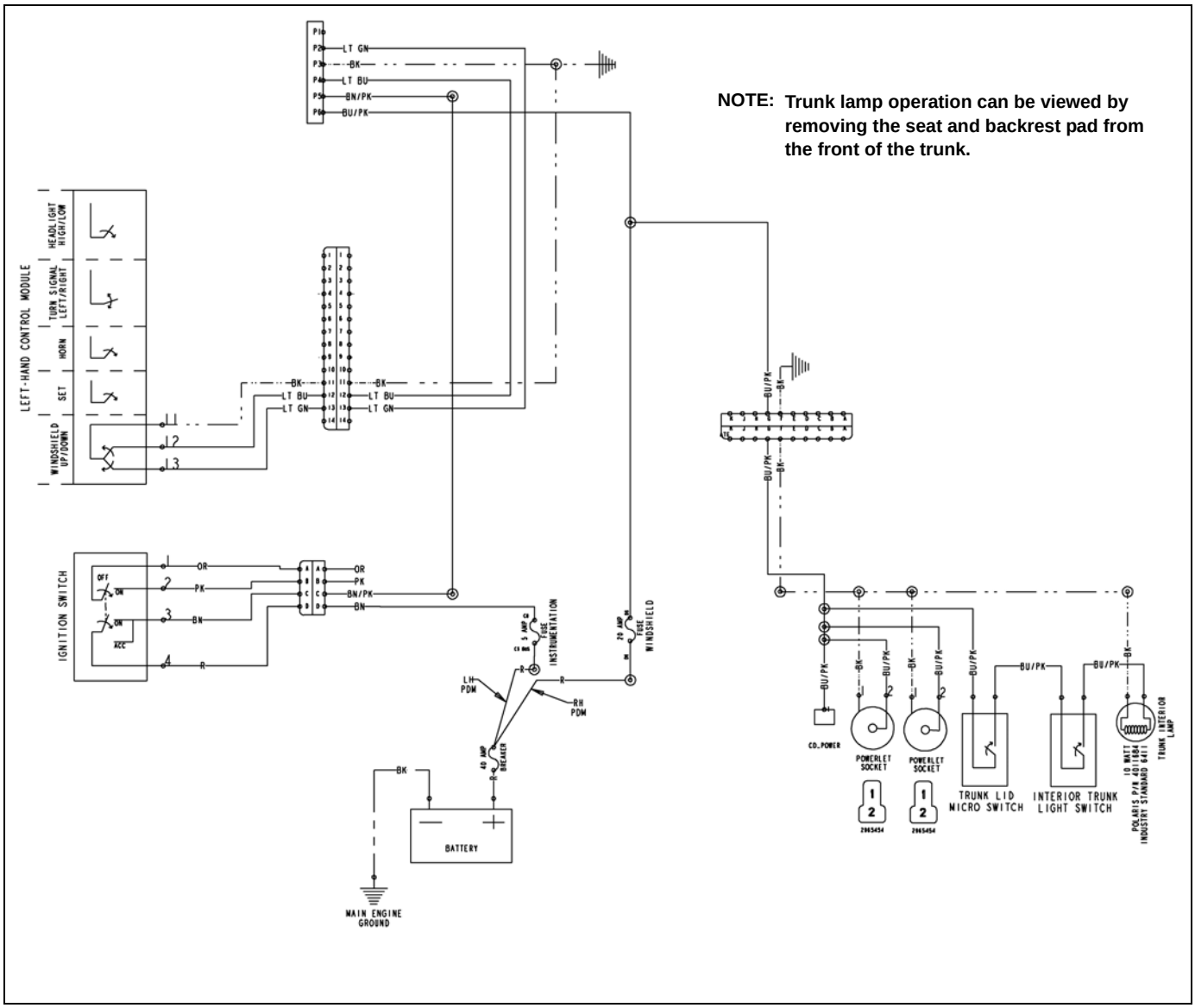

© 2009 Polaris Sales Inc.

INSTRUMENT CLUSTER

SYSTEM DIAGRAM (2008 - 2010)

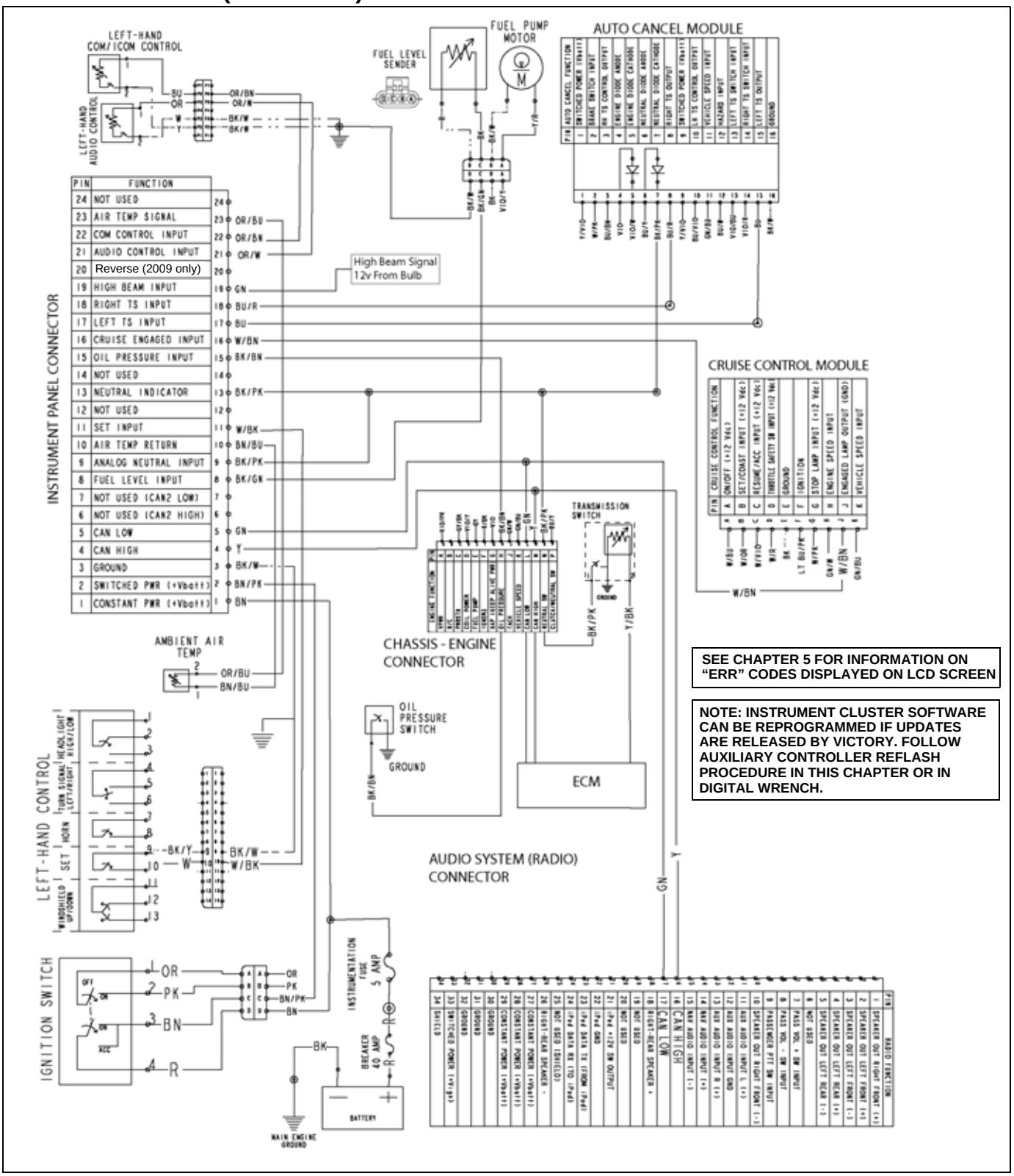

SEE CHAPTER 5 FOR INFORMATION ON "ERR" CODES DISPLAYED ON LCD SCREEN

NOTE: INSTRUMENT CLUSTER SOFTWARE CAN BE REPROGRAMMED IF UPDATES ARE RELEASED BY VICTORY. FOLLOW AUXILIARY CONTROLLER REFLASH PROCEDURE IN THIS CHAPTER OR IN DIGITAL WRENCH.

© 2009 Polaris Sales Inc.

INSTRUMENT CLUSTER 24 PIN CONNECTOR INPUT / OUTPUT (2008-2009)

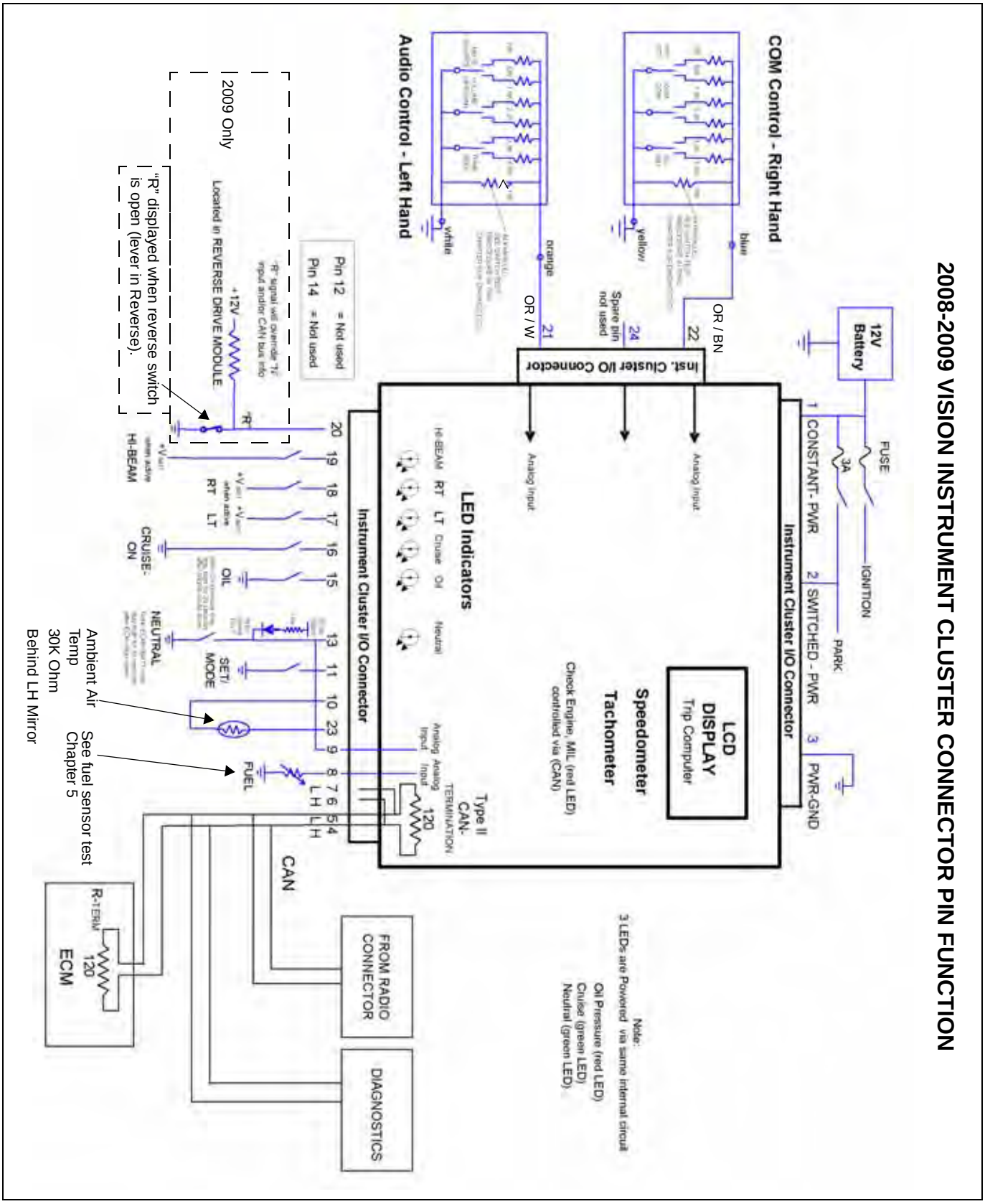

© 2009 Polaris Sales Inc.

INSTRUMENT CLUSTER 24 PIN CONNECTOR INPUT / OUTPUT (2010)

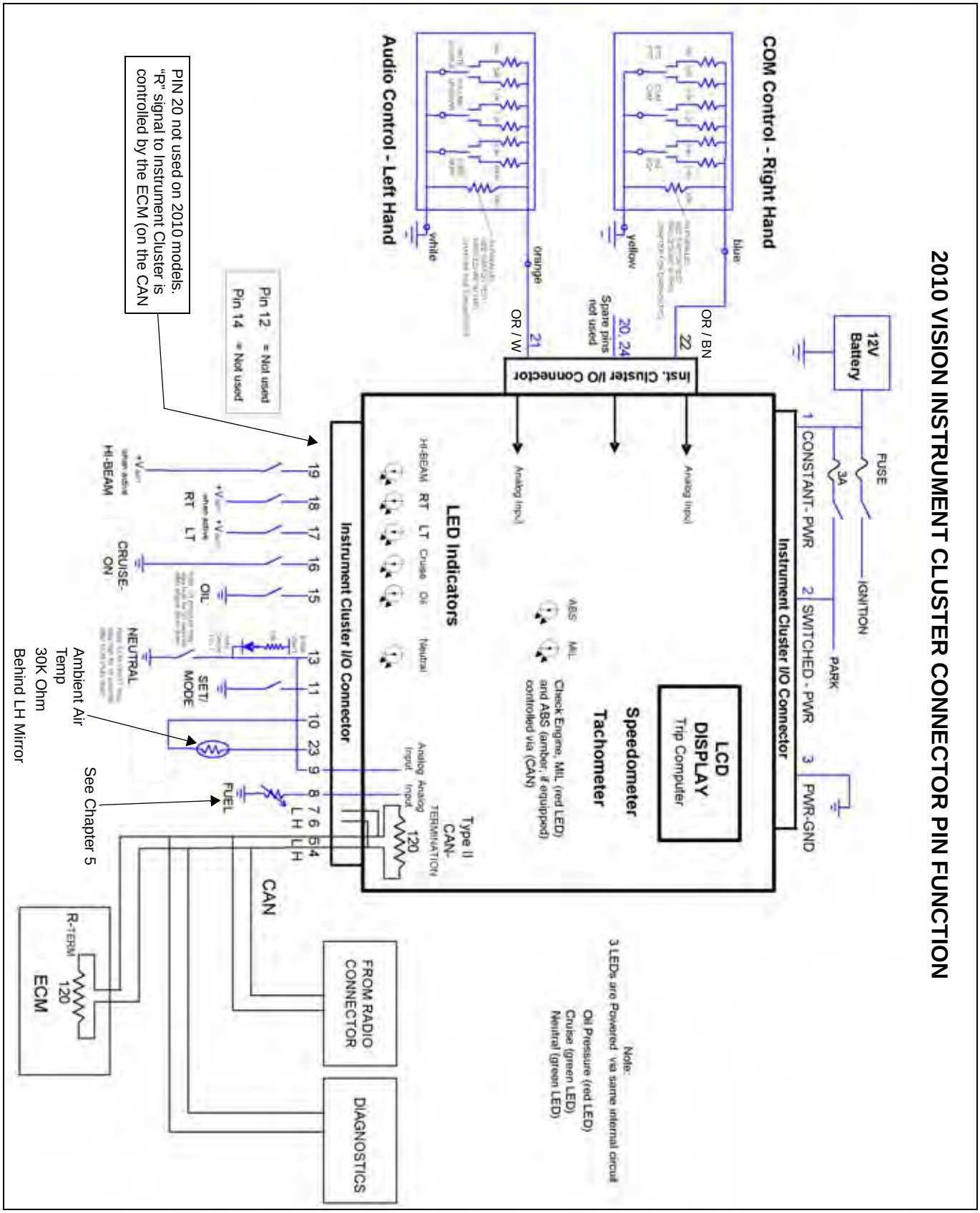

© 2009 Polaris Sales Inc.

HEATERS

HEATED SEAT & HANDGRIP WIRING DIAGRAM

HEATED SEAT GRID TROUBLESHOOTING:
Disconnect 2-Pin connector (under seat).
Connect Ohmmeter to LT BU/PK and BK wires on seat side of 2-Pin connector. Turn both seat heater switches OFF.
Test each switch / grid separately (turn other switch OFF).
Compare to specifications below (all specs +/- 20%).

2010 NOTE: High and low grid resistance measured will be the same approximate value.

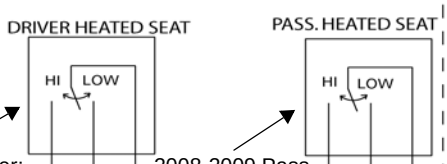

2008-2009 Driver:
OFF: O.L. (∞)
LOW: 21.5 Ω
HIGH: 5.3 Ω

2010 Driver
OFF: O.L. (∞)
HIGH or LOW:
2MΩ -12MΩ

2008-2009 Pass
OFF: O.L. (∞)
LOW: 21.5 Ω
HIGH: 5.3 Ω

2010 Pass
OFF: O.L. (∞)
HIGH or LOW:
2MΩ-12MΩ

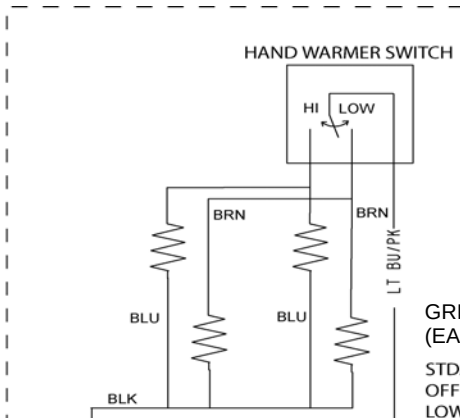

GRIP RESISTANCE (EACH)

STD. / OPTIONAL ACCESSORY
OFF = O.L.
LOW = 13 OHMS (BLK/BRN)
HIGH = 8 OHMS (BLK / BLU)

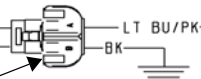

HEATED SEAT POWER SUPPLY TROUBLESHOOTING: Disconnect 2-Pin connector (under seat).
Turn key ON. Check for battery voltage on LT BU/PK wire on main harness side of connector.
Turn key OFF. Check for a good ground (less than 1 Ohm) on BK wire (on main harness side of 2-Pin).

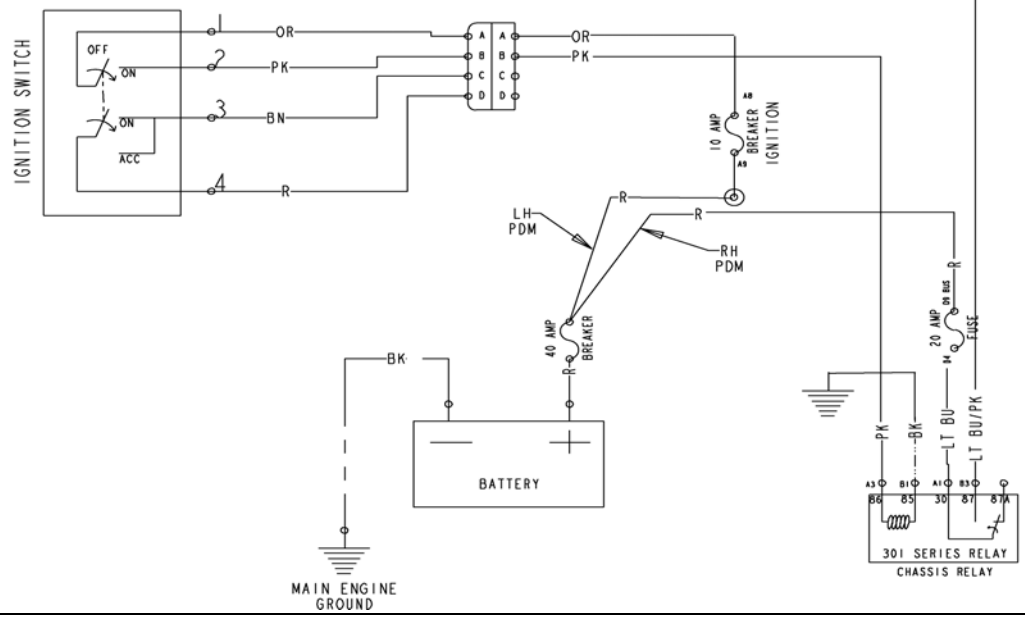

HEATED HAND GRIP TROUBLESHOOTING:

This test measures the resistance of both hand grip heater grids at the switch:

Disconnect BU (High) and BN (Low) wires from switch (under front of console).
Measure resistance between BU wire and ground: 4 Ohms
Measure resistance between BN wire and ground: 6.5 Ohms
If resistance is out of range, test each grip resistance individually (see test this page).

SWITCH CONTACT			
Wire Color →	BN	Lt BU/Pk	BU
HIGH		●	●
OFF		●	
LOW	●	●	

© 2009 Polaris Sales Inc.

CONSOLE SWITCH WIRE CONNECTIONS

Wire connections for console switches are shown below.

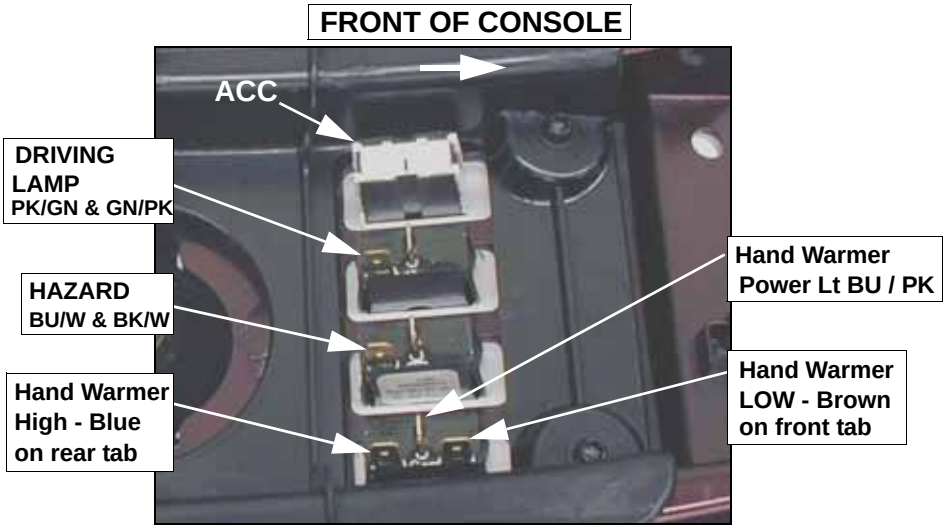

© 2009 Polaris Sales Inc.

TIPOVER SENSOR (2009-2010)

OVERVIEW OF OPERATION

The Tipover Sensor (TOS) is used to disable the fuel pump, fuel injector, and ignition circuits in the event of a crash or tipover condition.

The ECM sends a 5VDC reference to the sensor and monitors the output voltage. From the output signal, the ECM can tell whether the TOS system is in normal operation, if the vehicle is tipped over, or if there is an open or short in the system wiring. Only a tipover voltage from the sensor will cause the ECM to disable the fuel pump and ignition circuits. If the TOS system wiring is disconnected (open / high) the ECM will set a trouble code (and subsequent CHK ENG light) but will not disable the engine's operational circuits. The same is true for a TOS system short to ground (low).

Only in the event of an actual tipover condition is the voltage output within a range that will cause the ECM to disconnect the fuel and ignition circuits as well as the internal drivers that control them.

TIPOVER SENSOR RESET

After a Tipover Condition Has Occurred:

1. Return the motorcycle to the upright position and place it on the side stand.
2. Be sure the Engine Stop (kill) switch is in the RUN position.
3. Turn the ignition key OFF.
4. Turn the ignition key ON. The fuel pump should cycle and the system should return to normal operation.

DIAGNOSTICS

1. If the tipover sensor was activated (vehicle was actually tipped over) reset the system as outlined above. If the tipover condition trouble code (P1504) is still present, continue.
2. Remove the right side cover and right lower access panel (Chapter 3).
3. Visually inspect the sensor. Be sure it is mounted securely to the cruise module bracket and the bracket is secure in the chassis. The word "UP" must be visible on the top of the sensor and the sensor should be level relative to the motorcycle.
4. Disconnect the sensor from the main wire harness and look at connector pins for signs of corrosion or misalignment that would cause a poor connection.
5. Connect Digital Wrench for further diagnosis of the tipover sensor circuit.

LOCATION

The tipover sensor is mounted on the cruise control module bracket near the rear wheel closeoff panel.

Access the sensor by removing the right lower access panel. To disconnect the wire harness, insert a small flat screwdriver in the slot (A) on the left side of the connector.

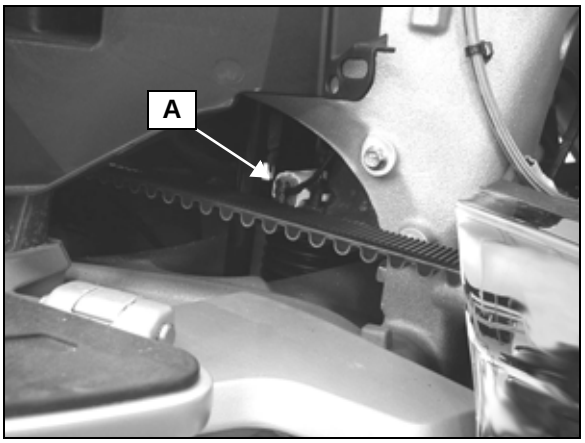

© 2009 Polaris Sales Inc.

AUDIO SYSTEMS

AUDIO SYSTEM DIAGRAM

NOTE: DO NOT INSTALL 2008-2009 RADIO, CB RADIO, OR XM RADIO ON 2010 MODEL VISION (OR 2010 EQUIPMENT ON 2008-2009). FOR AUDIO / COM SYSTEM OPERATION, REVIEW INFORMATION IN CHAPTER 1. SEE TROUBLESHOOTING ON PAGE 19.39.

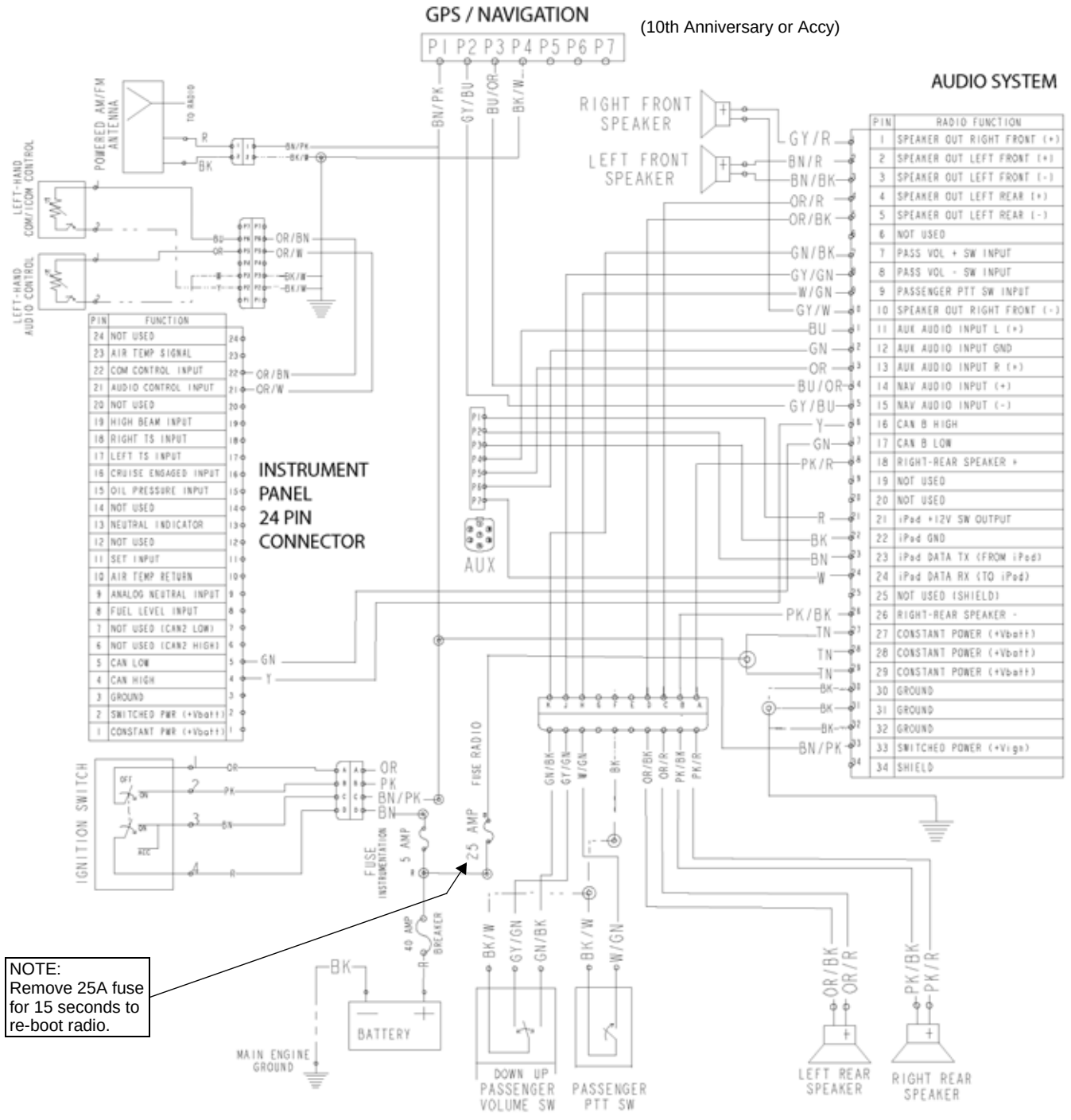

PIN	FUNCTION
24	NOT USED
23	AIR TEMP SIGNAL
22	COM CONTROL INPUT
21	AUDIO CONTROL INPUT
20	NOT USED
19	HIGH BEAM INPUT
18	RIGHT TS INPUT
17	LEFT TS INPUT
16	CRUISE ENGAGED INPUT
15	OIL PRESSURE INPUT
14	NOT USED
13	NEUTRAL INDICATOR
12	NOT USED
11	SET INPUT
10	AIR TEMP RETURN
9	ANALOG NEUTRAL INPUT
8	FUEL LEVEL INPUT
7	NOT USED (CAN2 LOW)
6	NOT USED (CAN2 HIGH)
5	CAN LOW
4	CAN HIGH
3	GROUND
2	SWITCHED PWR (+Vbatt)
1	CONSTANT PWR (+Vbatt)

PIN	RADIO FUNCTION
1	SPEAKER OUT RIGHT FRONT (+)
2	SPEAKER OUT LEFT FRONT (+)
3	SPEAKER OUT LEFT FRONT (-)
4	SPEAKER OUT LEFT REAR (+)
5	SPEAKER OUT LEFT REAR (-)
6	NOT USED
7	PASS VOL + SW INPUT
8	PASS VOL - SW INPUT
9	PASSENGER PTT SW INPUT
10	SPEAKER OUT RIGHT FRONT (-)
11	AUX AUDIO INPUT L (+)
12	AUX AUDIO INPUT GND
13	AUX AUDIO INPUT R (+)
14	NAV AUDIO INPUT (+)
15	NAV AUDIO INPUT (-)
16	CAN B HIGH
17	CAN B LOW
18	RIGHT-REAR SPEAKER +
19	NOT USED
20	NOT USED
21	iPod +12V SW OUTPUT
22	iPod GND
23	iPod DATA TX (FROM iPod)
24	iPod DATA RX (TO iPod)
25	NOT USED (SHIELD)
26	RIGHT-REAR SPEAKER -
27	CONSTANT POWER (+Vbatt)
28	CONSTANT POWER (+Vbatt)
29	CONSTANT POWER (+Vbatt)
30	GROUND
31	GROUND
32	GROUND
33	SWITCHED POWER (+Vign)
34	SHIELD

© 2009 Polaris Sales Inc.

AUDIO SYSTEMS DIAGNOSTIC SCREENS

On-board diagnostics and systems information are available on the radio display. Follow procedure below to enter Diagnostic Mode and view information. Only the main radio screen categories are shown here. Information screen and diagnostic screens will only appear if the motorcycle is equipped with that device (CB, XM, etc.)

1. Turn ignition switch to **ACC.**
2. Turn radio OFF (Victory, Victory Motorcycles or Ness Signature Series is shown on display).
3. Turn ignition switch **OFF**.
4. Turn ignition switch back to **ACC**.
5. **Press & HOLD** #1 preset button and MODE button on console while turning radio power ON.

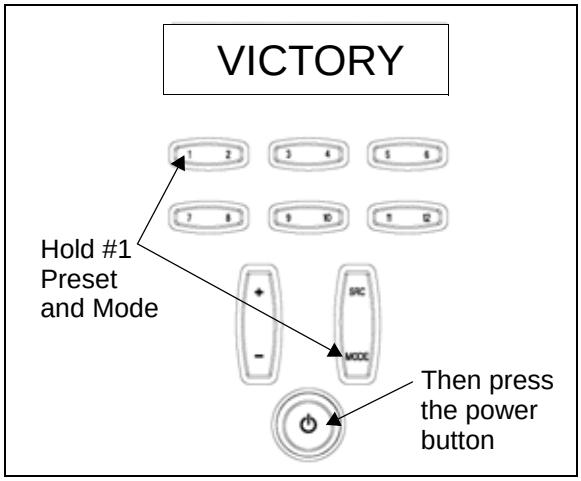

6. The *diagnostics* mode is entered. Screens 1-5 and a description of each follows.

NOTE: A "Watchdog Error Cleared" message will occasionally appear as the first thing displayed. This can be ignored, it is an internal software notification.

Example - Screen 1:

Software and hardware versions. Refer to Digital Wrench to see if software updates have been released. To view the CB and XM radio software versions, continue to toggle with the MODE button until CB or XM information is displayed.

SCREEN 1 - Software & Hardware

Example - Screen 2:

Audio / COM switch button diagnostics. This screen and button diagnostics are described on page 19.33.

2008 Display Shown

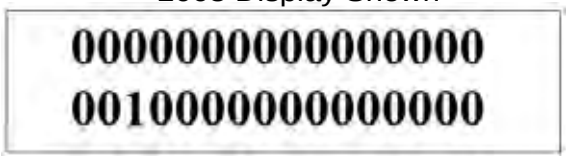

SCREEN 2 - Button Diagnostics

Example - Screen 3:

Tuner location screen displays which band frequency package is in use. To change country, press the "+" or "-" button on the radio console. When finished, press MODE button again to continue to the next screen.

SCREEN 3 - Tuner Location

Example - Screen 4:

Amplifier error screen displays "No Errors" as shown or an error fault if one exists.

SCREEN 4 - Amp error display

Example - Screen 5:

The speed signal screen displays speed of the vehicle in mph or kph to verify speed signal is reaching the radio.

SCREEN 5 - Speed signal

© 2009 Polaris Sales Inc.

AUDIO SYSTEMS CONTROL SWITCH ON-BOARD DIAGNOSTICS

Both the left handlebar audio control switch and console audio control buttons should be tested with on-board diagnostics if possible. A bench test procedure (page 19.35) can be performed if necessary.

To activate audio switch on-board diagnostic mode:

1. Turn ignition switch to **ACC.**
2. Turn radio OFF (Victory Motorcycles or Ness Signature Series is shown on display).
3. Turn ignition switch **OFF**.
4. Turn ignition switch back to **ACC**.
5. **Press & HOLD** #1 preset button and MODE button on console while turning radio power ON.

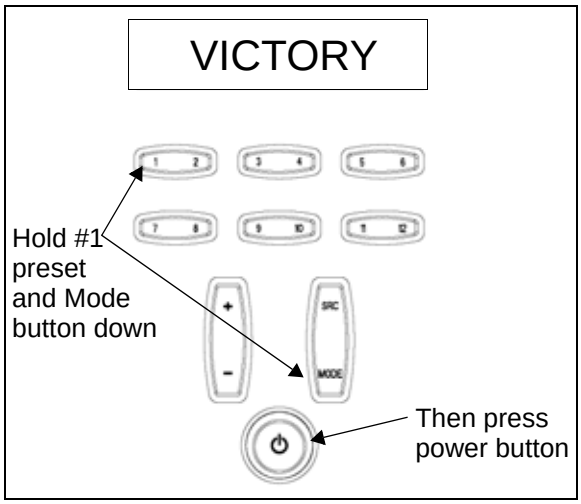

6. The *diagnostics* mode is entered. Press MODE to toggle to the second screen - button diagnostics. See for description of screens 1, 3, 4, & 5.

NOTE: A "Watchdog Error Cleared" message will occasionally appear as the first thing displayed. This can be ignored, it is an internal software notification.

7. **2008 Models** - display contains two lines of "zeros". Each location corresponds to a radio button on the radio, handlebar switches, or passenger control switches. (See page 19.34 for position).
   A zero (0) represents a button not being pressed.
   A one (1) represents a button being pressed.
   If a "1" appears at the proper address on the display, the button and circuit wiring are functioning correctly.
   2009* and 2010 Models - the display shows the name of the button that is pressed.

* Software version 5.05A and later

On 2008 models, be sure the correct input is being "seen" by the radio. To do this, press a button and note the location (address) of the "1" when it appears in the display, then verify it is in the correct location using the table on the following page.

This is especially important if the radio does not respond correctly to commands from a switch.

Verify switch connector pins are clean (use electrical contact cleaner) and that the connector is latched together securely before replacing a switch.
A loose connection or even a small amount of contamination or corrosion can affect switch function.

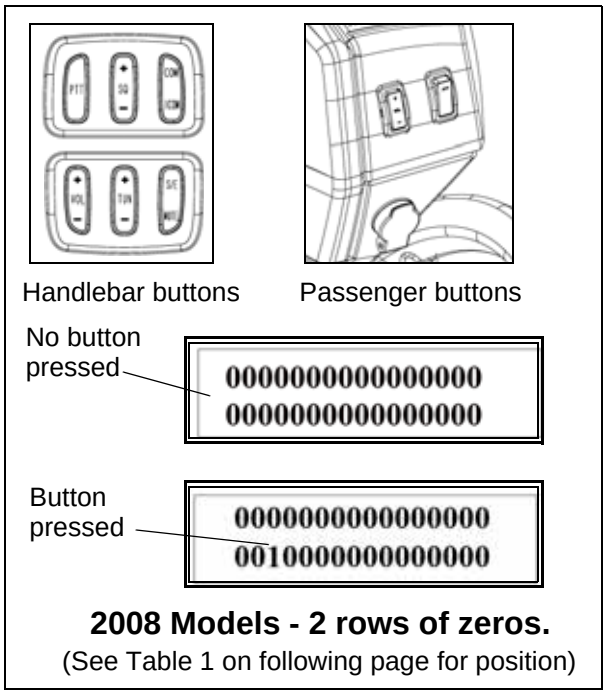

2008 Models - 2 rows of zeros.
(See Table 1 on following page for position)

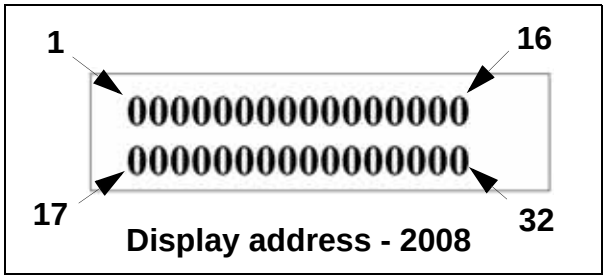

Display address - 2008

2009-2010 Models - Display shows name of button pressed.

© 2009 Polaris Sales Inc.

AUDIO / COM BUTTON LOCATION TABLE - 2008 MODELS

BUTTON FUNCTION	POSITION ON DISPLAY TOP ROW (POSITIONS 1-16)	POSITION ON DISPLAY BOTTOM ROW (POSITIONS 17-32)
NOT DEFINED	1	
SOURCE (on both radio console and handlebar audio switch)	2	
MODE (on radio console button)	3	
"+" (on radio console)	4	
"-" (on radio console)	5	
PRESET 1	6	
PRESET 2	7	
PRESET 3	8	
PRESET 4	9	
PRESET 5	10	
PRESET 6	11	
PRESET 7	12	
PRESET 8	13	
PRESET 9	14	
PRESET 10	15	
PRESET 11	16	
PRESET 12 (on radio console)		17
PTT (Push to Talk) (on rear control)		18
VOLUME "+" (on rear control)		19
VOLUME "-" (on rear control)		20
ICOM (on handlebar com switch)		21
COM (on handlebar com switch)		22
VOLUME "+" (on handlebar audio switch)		23
VOLUME "-" (on handlebar audio switch)		24
MUTE (on handlebar audio switch)		25
TUNE "+" (on handlebar audio switch)		26
TUNE "-" (on handlebar audio switch)		27
PTT (Push to Talk) (on handlebar com switch)		28
SQUELCH "+" (on handlebar com switch)		29
SQUELCH "-" (on handlebar com switch)		30
NOT DEFINED		31 & 32

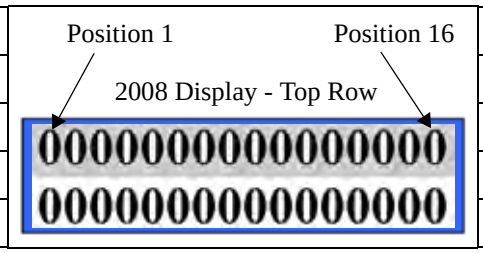

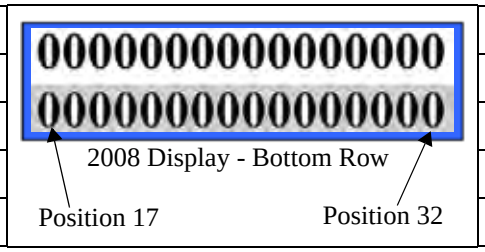

© 2009 Polaris Sales Inc.

AUDIO SYSTEMS CONTROL SWITCH - BENCH TEST

On-board switch diagnostics should be used if available, however, the audio control switches can be bench tested with an Ohmmeter. Use extra care with the meter leads to ensure connector pins are not damaged when testing.

1. Connect Ohmmeter leads to each of the two wires leading from the Audio Switch or CB / ICOM switch.
2. Press each button and refer to the chart below for resistance values.

NOTE: The self-diagnostics built in to the radio use the 15 KΩ diagnostic resistor (in parallel with all button resistors) to verify the switch is connected. The switch wire resistance will reflect this 15 KΩ resistor value when none of the buttons are pushed.

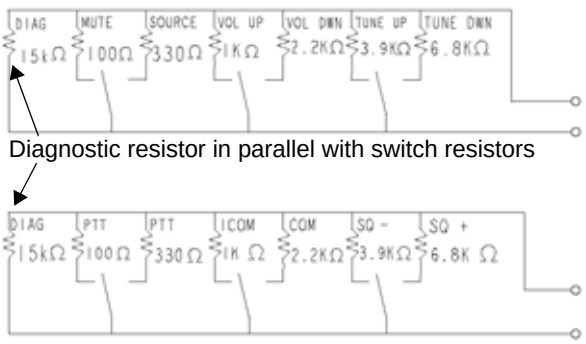

Diagnostic resistor in parallel with switch resistors

Actual resistor values shown. Use resistance from table when testing switch with an Ohmmeter.

AUDIO SWITCH RESISTANCE

BUTTON	RESISTANCE (+/- 10%) Wire Colors: WHITE, ORANGE
MUTE	99Ω
SOURCE	325Ω
VOLUME UP	940Ω
VOLUME DOWN	1920Ω (1.92KΩ)
TUNE UP	3095Ω (3.09KΩ)
TUNE DOWN	4680Ω (4.68KΩ)
DIAGNOSTIC (No Button Pushed)	15,000Ω (15.0KΩ)

CB / ICOM SWITCH RESISTANCE

BUTTON	RESISTANCE (+/- 10%) Wire Colors: BLUE, YELLOW
PTT (Top)	99Ω
PTT (Bottom)	325Ω
ICOM	940Ω
COM	1920Ω (1.92KΩ)
SQUELCH (-)	3095Ω (3.09KΩ)
SQUELCH (+)	4680Ω (4.68KΩ)
DIAGNOSTIC (No Button Pushed)	15,000Ω (15.0KΩ)

© 2009 Polaris Sales Inc.

AUDIO SYSTEM REPROGRAMMING (AUXILIARY CONTROLLER REPROGRAM)

The current radio software and hardware versions are displayed on Screen 1 when the radio is in diagnostic mode. Follow the instructions on page 19.32 to access radio diagnostic screens and record the version that is currently installed.

If software updates become available for the audio system (Radio, XM, CB/COM, etc.), the radio can be reprogrammed using Digital Wrench. The procedure is similar to a fuel / ignition map calibration reprogramming procedure.

If you have questions about:

- Connecting Digital Wrench to the vehicle
- Troubleshooting communication errors
- How to test your Digital Wrench interface cable
- Downloading the most recent reprogramming file set
- Virtually anything related to Digital Wrench!

visit *www.diagsys.com...*

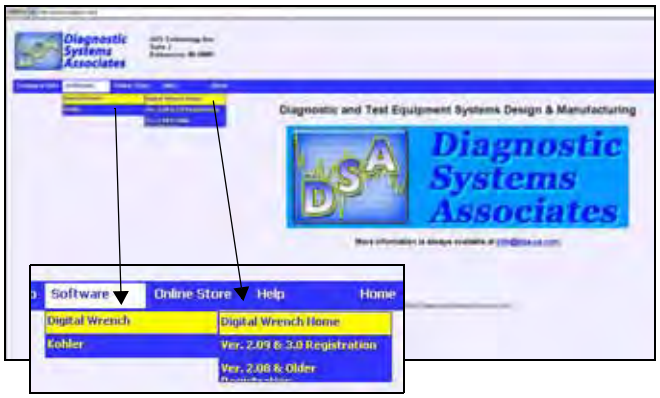

...and click on Digital Wrench Home. Then select a diagnostic category...

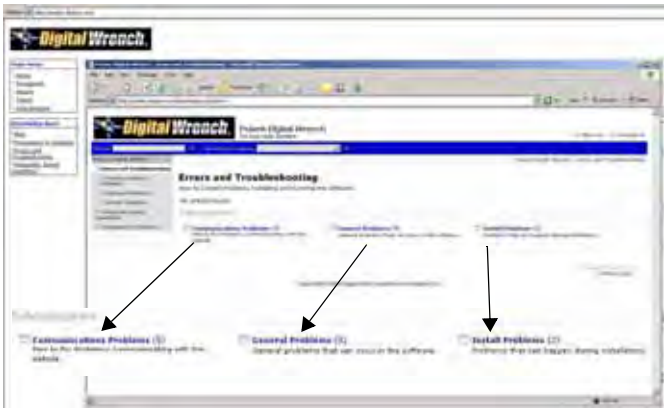

...or go to www.polarisdealers.com and click on the Digital Wrench Updates link under the Service and Warranty drop down menu...

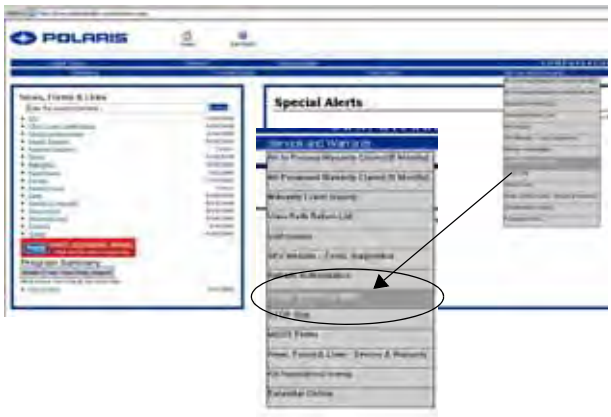

...either of these will get you to the most up-to-date diagnostic troubleshooting help and FAQs available.

REPROGRAMMING PROCEDURE

1. Connect the Digital Wrench Smartlink to the diagnostic port in the left saddlebag.
2. Start Digital Wrench, select appropriate vehicle information, and click NEXT.

3. Click the red tool box to open the Special Tests menu.
4. Select “Auxiliary Controller Reprogramming”.

© 2009 Polaris Sales Inc.

5. Select the item you want to re-program from the list.

6. Follow instructions on screen and click CONTINUE.

7. Highlight the Request Code that appears in the box. (Hold "Ctrl" and press "C" to copy the code).

NOTE: DO NOT shut down or exit Digital Wrench until reprogramming is complete or the Authorization Key will be lost!

8. Go to the dealer web site (*www.polarisdealers.com*).

9. Select the *Service and Warranty* drop-down menu.

10. Select "*Reflash Authorization*".

11. Paste the Request Code copied in Step 7 into the Request Code box (right click in the box then select paste).

12. Click CONTINUE.

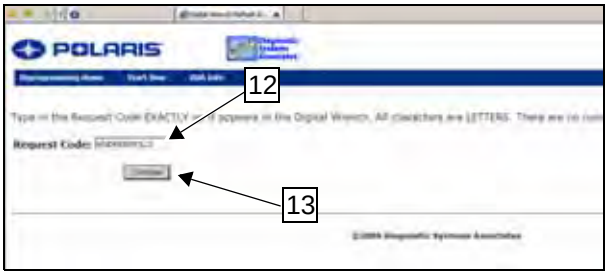

13. Enter the information in the boxes and click "Authorize". Click only ONCE as indicated on the screen!

14. A screen will pop up. Click OK to get the reflash Authorization Key.

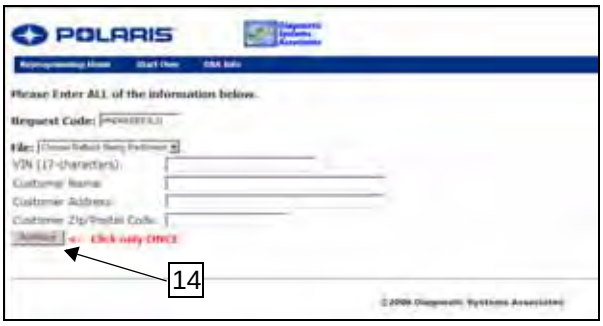

© 2009 Polaris Sales Inc.

15. Highlight the Authorization Key.

16. Right click and select COPY to copy the key.

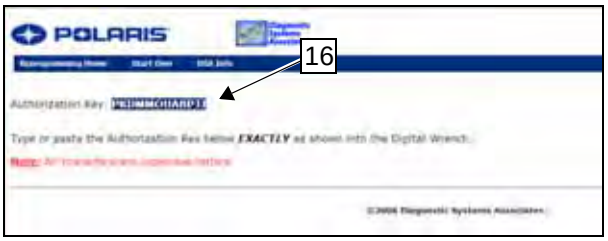

17. Click in the Authorization Key box.

18. Hold “Ctrl” and press “V” to paste the key.

19. Click CONTINUE.

20. This screen will appear when reprogramming is taking place. Do not disturb the motorcycle, computer, or mouse while reprogramming is in process.

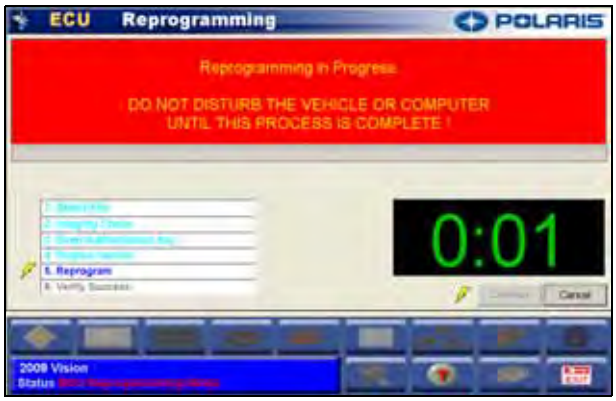

21. Once reprogramming is complete, follow all steps on the screen, then click FINISH.

22. Cycle the ignition switch to restart the audio components.

23. Repeat this procedure for other components that need reprogramming.

24. Always verify the software version of <u>all</u> audio components (radio, CB/ICOM, XM, etc.) is at the most current level, by performing the following steps:

25. Turn ignition switch to **ACC and turn radio OFF.** (VICTORY or VICTORY MOTORCYCLES is shown on display)

26. Turn ignition switch to **OFF and then back to ACC**.

27. **Press & HOLD** #1 preset button and MODE button on console then turn radio power ON.

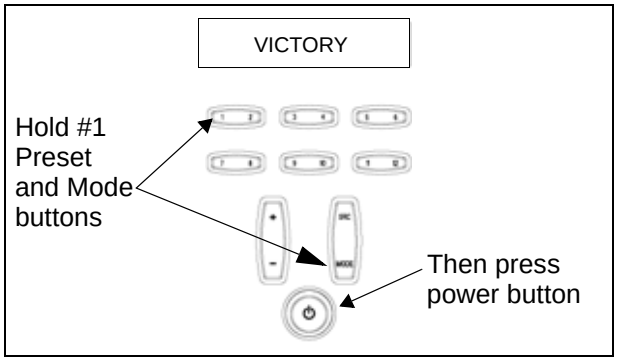

The *diagnostics* mode is entered. Record the radio software version, then use the MODE button to toggle to the CB and XM radio screens to view the software version of each.

© 2009 Polaris Sales Inc.

AUDIO TROUBLESHOOTING TIPS

Symptom	Possible Cause/ Action
No radio display, partial display, or system "locked up".	Re-boot the radio: Remove radio fuse (25A) for 15 seconds. Reinstall and test.
	If a re-boot (above) does not restore the system, temporarily disconnect the entertainment harness and any accessories and test.
System does not respond correctly to hand control button inputs.	Test hand control switches with on-board diagnostics (begins on page 19.33)
CB / ICOM or XM radio does not interact properly with main radio.	Software (SW) versions of system components (radios) are at different levels. Reprogram (reflash) ALL radios to the same level. See page 19.36.
Speakers not genuine Victory.	NEVER use aftermarket speaker in the audio system. Damage can occur to the radio due to overheating. Install genuine Victory (4 Ohm) speakers.
Headsets work only in entertainment modes and not in ICOM.	Headsets are not genuine Victory. Replace with genuine Victory headsets.

NAVIGATION SYSTEM

GPS NAVIGATION & NAV MP3 PLAYER

Refer to the Garmin® zumo® 660 Operator's Manual and to page 1.52 of this manual for more information.

Changing the Active Source to NAV MP3: page 1.37

Before you begin: page 1.52

Operation tips and Volume Settings: page 1.52

Changing the Aux Mode to NAV MP3: page 1.53

Switching from radio to MP3 Player: page 1.54

Other notes:

The GPS system audio will override all other audio functions except for the CB (transmitting and receiving).

The GPS will not provide audio commands if the radio is OFF.

To disable the GPS audio, turn volume on GPS unit to zero.

The volume level through the speaker is based on the volume setting in the GPS unit along with the volume setting of the radio.

© 2009 Polaris Sales Inc.

REVERSE SYSTEM

WIRING DIAGRAM / REVERSE HARNESS

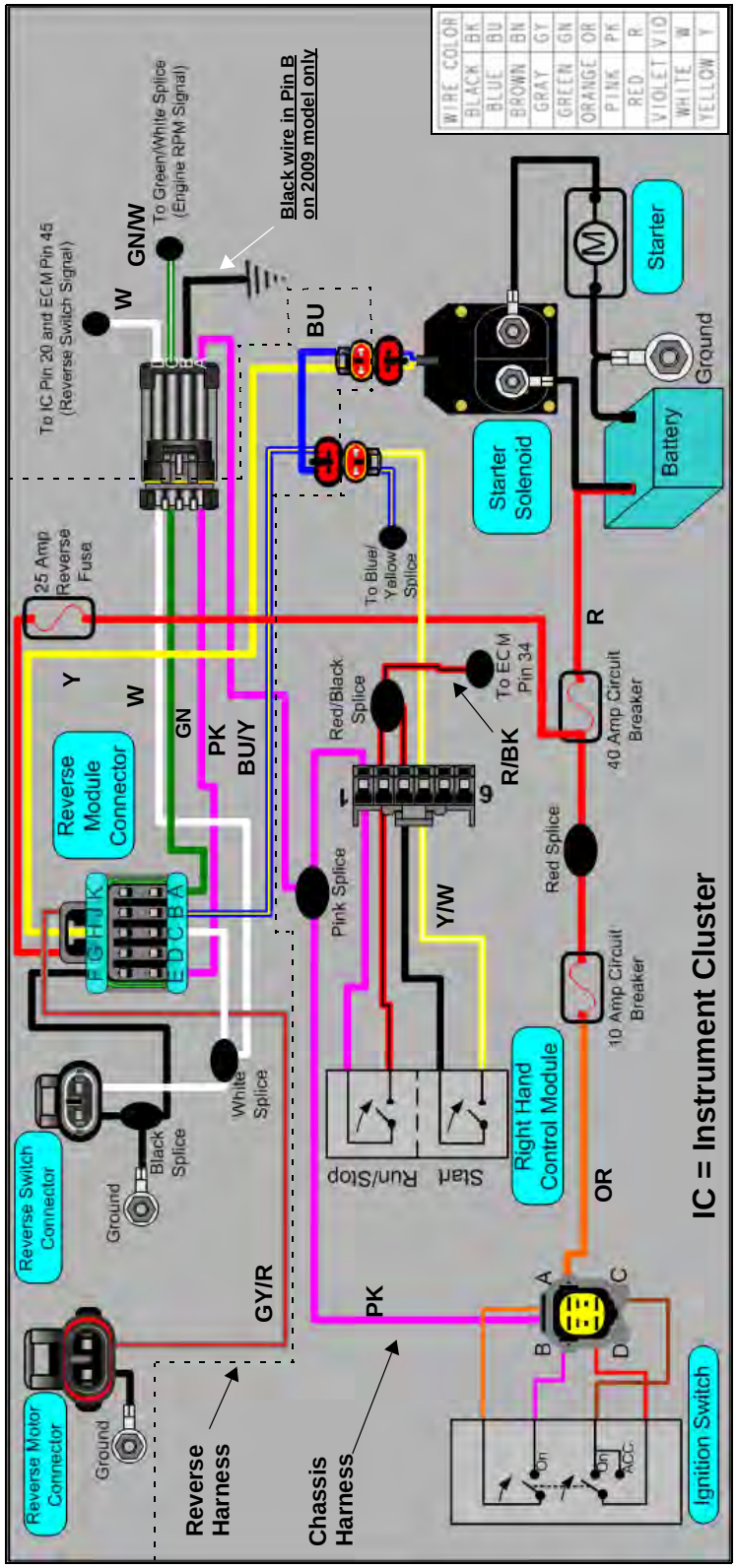

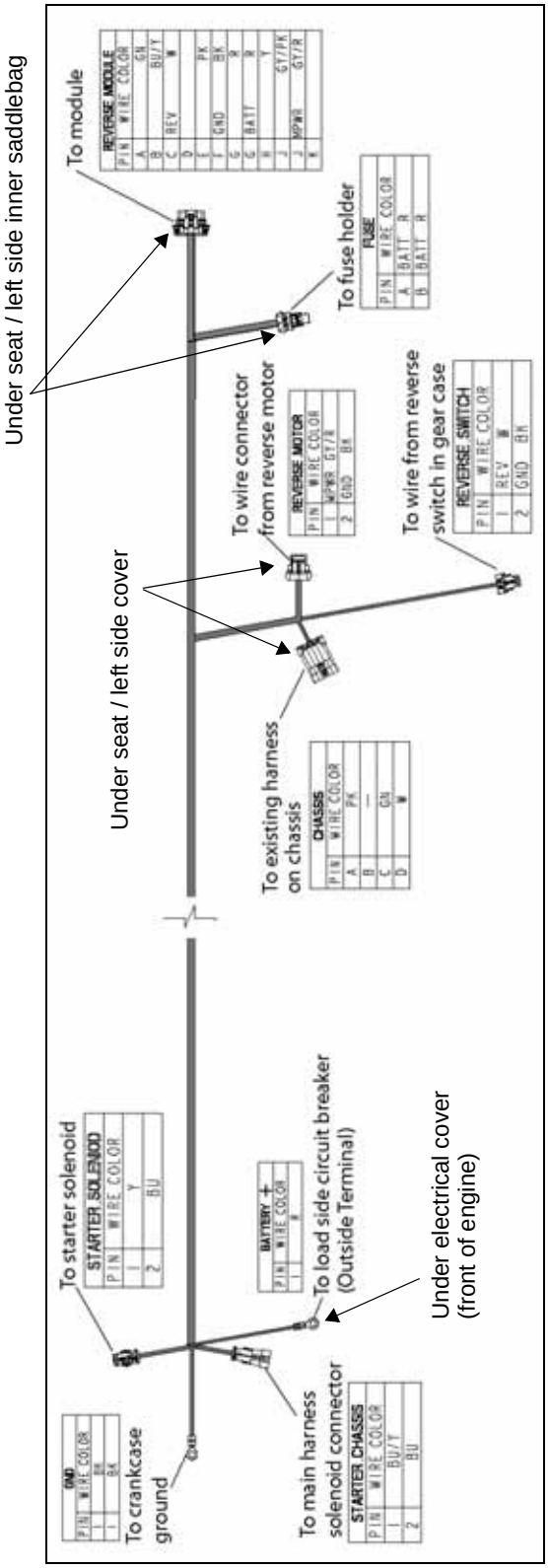

© 2009 Polaris Sales Inc.

REVERSE SYSTEM DIAGNOSTICS

OVERVIEW OF OPERATION

In a Reverse system, the electric starter button serves a dual purpose. When the starter button is pressed, battery voltage is sent through the Reverse wiring harness to the Reverse Module. The module then decides whether to send power to the electric starter solenoid (for engine starting) or to the Reverse Drive Motor (for reverse operation). This decision is based on information the module receives from the reverse switch and a few other inputs such as the neutral switch and tachometer signal.

MECHANICAL SYSTEM BASIC FUNCTION

When the Reverse Lever is lifted UP (Reverse) a cam-actuated linkage rod pulls the Reverse Idler Gear inward, directly coupling the Pinion Gear to the Reverse Driven gear (mounted to the belt drive sprocket). The Reverse Switch is now OPEN, which takes the ground away from Pin C of the module, and the module will supply power to the Reverse motor when the starter button is pressed.

REVERSE MODULE INPUT TESTING

To test the various inputs to the reverse module, disconnect the harness from module (page 19.43) and test with a 12V test light or multimeter. Tests are outlined in the table below.

NOTE: The engine must be running to test the tachometer signal to the module on Pin A. If the tachometer works, perform tests on the other inputs first, then if necessary, test the tach input on Pin A.

REVERSE MODULE INPUT / OUTPUT			
Pin Number	**Function / Name**	**Wire Color**	**Pin Function / Test Connections / Normal Result** (All input tests performed on connector pins; harness disconnected from module)
A	Tachometer Input	GN	SIGNAL: 9Hz square wave. FUNCTION: tells module engine is running. TEST: Set meter to Hz A/C or Vdc. Start engine first, then disconnect harness connector from module. Connect red (+) meter lead to PIN A. Connect black (-) meter lead to engine ground or Pin F (if ground at Pin F has been tested). RESULT: Approximately 9 Hz or a pulsating DC indicated on the bar graph of the meter, indicating that a signal is present (voltage reading will vary).
B	Start Switch Input	BU / Y	SIGNAL: +12 Vdc. FUNCTION: Battery voltage into module when starter button is pressed. TEST: Set meter to Vdc. Connect red (+) meter lead to PIN B. Connect black (-) meter lead to engine ground (or Pin F). Turn ignition switch ON and stop switch to RUN. RESULT: Battery voltage present when starter button is pressed.
C	Reverse Switch Input	W	SIGNAL: Open to ground. FUNCTION: Tells module Reverse has been selected (Pin C has no ground). TEST: Set meter to Ω (Ohms). Connect one meter lead to PIN C. Connect other meter lead to engine ground (or Pin F). Move reverse lever to Reverse. RESULT: OPEN (OL) with lever in Reverse (UP). Good continuity to ground (≤ 1Ω) with lever in Forward (down).
D	Not Used	-	Pin D not used
E	Switched Power	PK	SIGNAL: +12 Vdc. FUNCTION: Battery voltage into module. TEST: Set meter to Vdc. Connect red (+) meter lead to PIN E. Connect black (-) meter lead to engine ground (or Pin F). Turn ignition switch ON and stop switch to RUN. RESULT: Battery voltage present when key is turned ON.
F	Ground	BK	Module ground. TEST: Set meter to Ω (Ohms). Connect one meter lead to PIN F. Connect other meter lead to engine ground. RESULT: Continuity to ground (≤ 1Ω).
G	Battery Voltage	R	SIGNAL: +12 Vdc. FUNCTION: Power supply from *load* side of 40A circuit breaker. Module switches power to Pin J in Reverse. TEST: +12 Vdc constant.
H	Starter Output	Y	Power out of module to engine starter solenoid when starter button is pressed (and reverse lever *is not* in Reverse).
J	Reverse Output	GY/R	Power out of module to reverse drive motor when starter button is pressed (and reverse lever is in Reverse).
K	Not Used	-	Pin K not used

© 2009 Polaris Sales Inc.

REVERSE SYSTEM DIAGNOSTICS (Cont.)

REVERSE SYSTEM TROUBLESHOOTING		
Problem	**Possible Cause / Remedy**	**Reference**
Reverse system inoperative. “R” not indicated on display.	Reverse switch contacts closed. Check reverse switch function and linkage adjustment.	See below for switch contact test. Adjust linkage rod (page 11.12).
	25A fuse open (blown). Replace fuse and determine cause.	See page 19.43
	Poor wiring connection. Verify all wiring is connected and clean.	
Engine starter inoperative* *NOTE: If the 25A fuse is blown, the engine starter motor will not operate even if the reverse lever is in the forward (down) position.	Reverse lever in “Reverse” position (UP). Move lever to forward (DOWN) position.*	
	25A fuse open (blown). Replace fuse. Determine cause of failure.	See page 19.43
	Poor wiring connection. Verify all wiring is connected and clean.	
“R” Displayed too early or too late in reverse lever travel range	Reverse linkage adjustment incorrect.	See below for switch contact test. Adjust linkage rod (page 11.12).
	Reverse switch malfunction or switch mounting bracket bent.	
Engine kills when transmission shifted into gear.	Reverse switch contacts open (no ground on Pin C at module). Reverse lever in Reverse position or linkage adjustment incorrect.	Move lever back to the Forward position (down) or adjust shift linkage (page 11.12).
Difficulty moving lever into or out of Reverse position	Reverse gear idler shaft dirty. Lubricate shaft at every oil change.	Lubricate idler shaft (page 2.7)

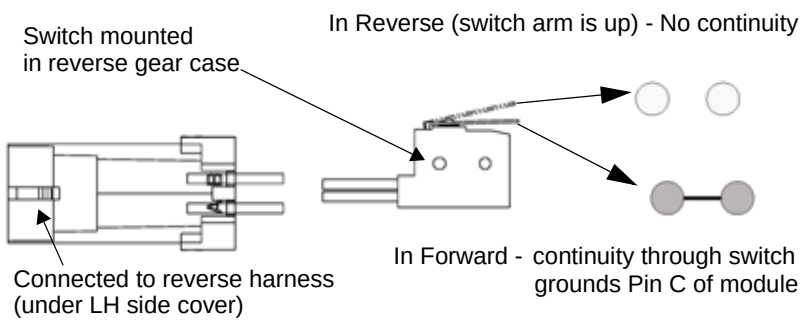

Reverse Switch Inspection

1. Disconnect switch (under left side cover).
2. Connect one lead of Ohmmeter to switch wire and the other to engine ground.
3. Place Reverse lever in forward (Down).
4. Resistance should be less than 1 Ohm to ground (good continuity).
5. Slowly lift reverse lever while observing the Ohmmeter reading. Lever must move at least 6mm (1/4 inch) and no more than 12mm (1/2 inch) before the switch opens (no continuity).
6. If switch opens and closes out of the range above, adjust linkage rod (page 11.12). Replace switch if always grounded or open.

© 2009 Polaris Sales Inc.

REVERSE SYSTEM SAFETY

NOTE: Do not attempt to engage or disengage the reverse system when the motorcycle is moving.

BEFORE operating in reverse	*NEVER operate in reverse*
Always sit on the motorcycle with legs astride and both feet on the ground. Always check for obstacles or people behind the motorcycle. Always retract the sidestand fully. Always make sure the motorcycle is completely stopped.	When not properly seated. When in an area where obstacles or bystanders are present. With a passenger on board. A passenger can obstruct your view and maneuverability. On loose or slippery surfaces. Loss of foot traction could cause a tip-over. While the motorcycle is moving forward. When on a grade or uneven surfaces.

OPERATING THE REVERSE SYSTEM

1. Check the area behind and around the motorcycle for obstacles or people. Be aware that the front wheel may travel outward and require a larger operating area.
2. Make sure the motorcycle is stationary.
3. Dismount any passenger.
4. Straddle the motorcycle and bring it to the fully upright position. Sit in a normal riding position with legs astride and both feet on the ground.
5. Retract the sidestand.
6. Place the transmission in neutral. Start the engine and allow it to idle.
7. Lift the reverse lever and verify that the reverse indicator (R) displays in the Information Display.
8. Recheck the area behind and around the motorcycle to ensure a clear operating area.
9. While balancing the motorcycle with your legs and feet, press and hold the START button to begin moving in reverse. Release the button to stop moving.
10. When completely stopped, move the reverse lever down to the disengaged position. Verify that the neutral indicator (N) displays before stopping the engine.

NOTE: The engine will stop if you shift into forward gear before disengaging the reverse lever.

REVERSE MODULE / FUSE ACCESS

1. Remove seat (page 3.27).
2. Reverse module is located between the left inner saddlebag and the frame. Fuse (A) is attached.

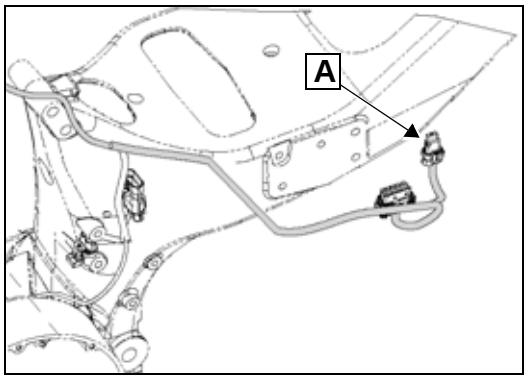

3. Lift tab and separate connector from module.

NOTE: The starter system will not function with the reverse module disconnected, or if the 25A fuse (A) is open. On models equipped with Reverse, the tachometer signal test (page 19.44) can be performed at this connector, but the engine must be started BEFORE disconnecting the harness from the reverse module.

© 2009 Polaris Sales Inc.

TACHOMETER SIGNAL TEST

A tachometer signal is sent out of ECM (Pin 22) on the Green / White wire. The signal can be tested at the cruise control module connector GN/W wire (2008-20010), the reverse harness connector on the chassis harness GN/W wire (2009-2010 not equipped with reverse), or at the reverse module GN wire (2009-2010 with reverse).

NOTE: The Instrument Cluster receives a tachometer input on the CAN line on Pins 4 and 5 of the 24-Pin Instrument Cluster connector. A multimeter cannot be used to check the tach signal at the Instrument Cluster. If the tachometer (gauge) does not function properly, inspect the connector for corroded, loose, or damaged pins.

TESTING AT THE CRUISE CONTROL CONNECTOR:

1. Remove the seat (page 3.27).
2. Shift the transmission into NEUTRAL.
3. Set digital volt meter to measure Frequency (Hz AC scale). If your meter does not have frequency measurement capability, set the meter to measure DC Volts (Vdc).
4. Use a screwdriver through the opening in the frame and carefully pry back the latch of the cruise control connector while pulling lightly on the connector harness. DO NOT pull forcefully on the wires.
5. Connect Red meter lead (+) to Pin H of cruise control module connector (GN/W wire).
6. Connect Black (-) meter lead to engine ground.
7. Start engine and let it idle.
8. Compare measurement to specification.
9. If no tach signal is present, inspect GN/W wire in the Engine-to-Chassis harness connector (A).

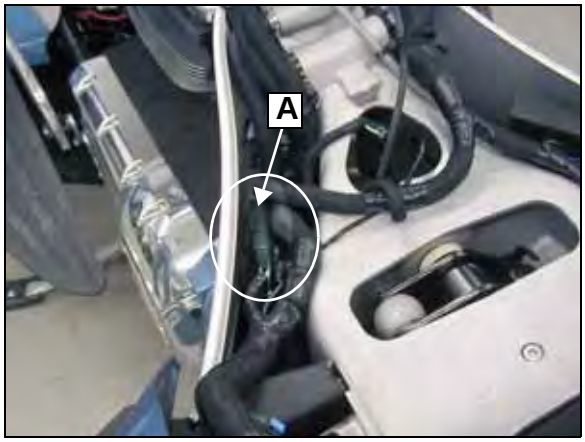

TESTING AT THE REVERSE MODULE:

1. Remove seat (page 3.27).
2. Shift transmission into NEUTRAL.
3. Set digital volt meter to measure Frequency (Hz AC scale). If your meter does not have frequency measurement capability, set the meter to measure DC Volts (Vdc).
4. Start engine and let it idle.
5. Disconnect reverse module wire harness connector (page 19.43).

6. Connect Red meter lead (+) to Pin A of reverse module connector (GN wire).
7. Connect Black (-) meter lead to engine ground.
8. Compare measurement to specification.
9. If no tach signal is present, inspect GN/W wire in the Engine-to-Chassis harness connector (A).

© 2009 Polaris Sales Inc.

GROUND LOCATIONS

Symptoms of a loose, corroded, or broken ground wire vary depending on the wire and the location. Most often, a problem with a main ground wire location will affect multiple circuits. Inspect the grounds to be sure they are clean and tight.

Engine ground (A).
Left rear corner of crankcase.

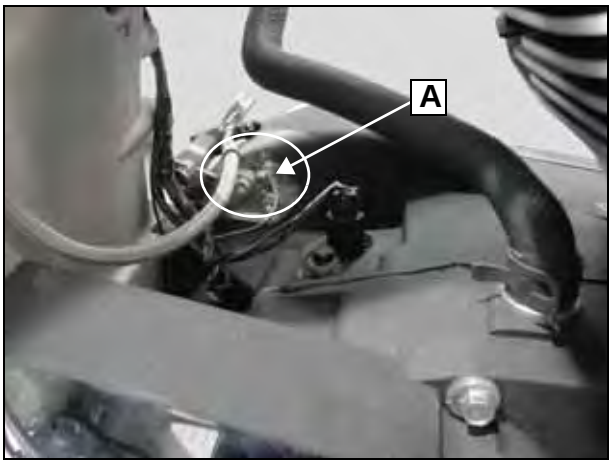

Engine harness grounds (B).
Front left corner of crankcase under electrical cover.

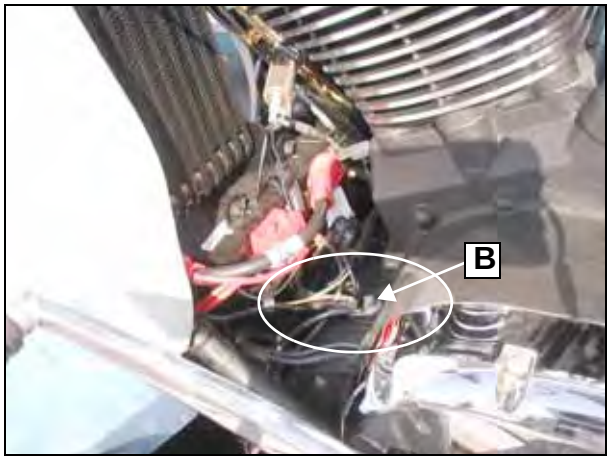

ECM ground (C).
Front left ECM mounting bolt (under seat).

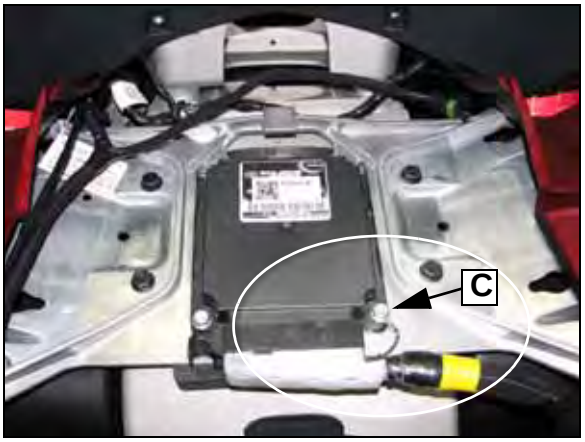

Chassis grounds (D).
Left upper frame-to-fairing support bracket bolt (near air filter).

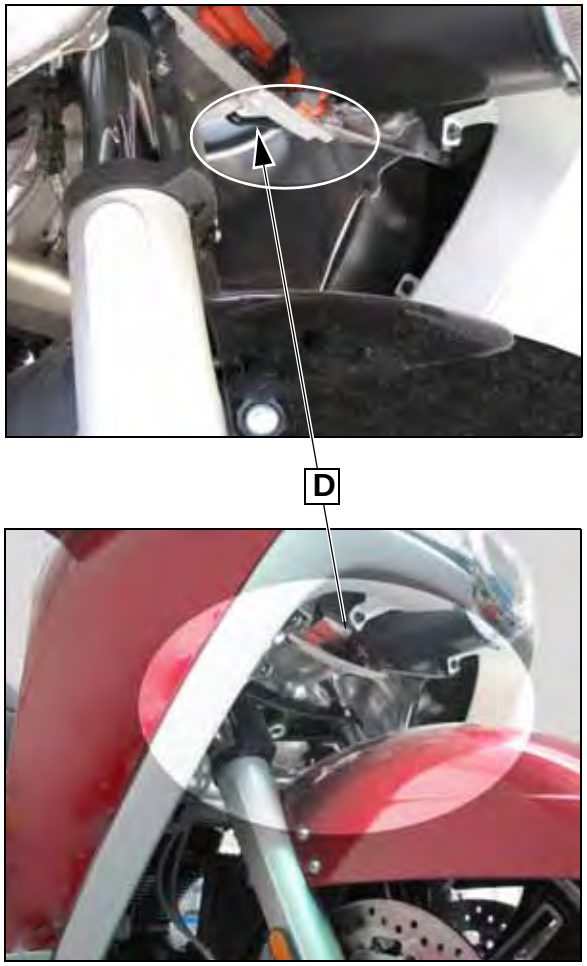

© 2009 Polaris Sales Inc.

WIRE HARNESS (TOP VIEW)

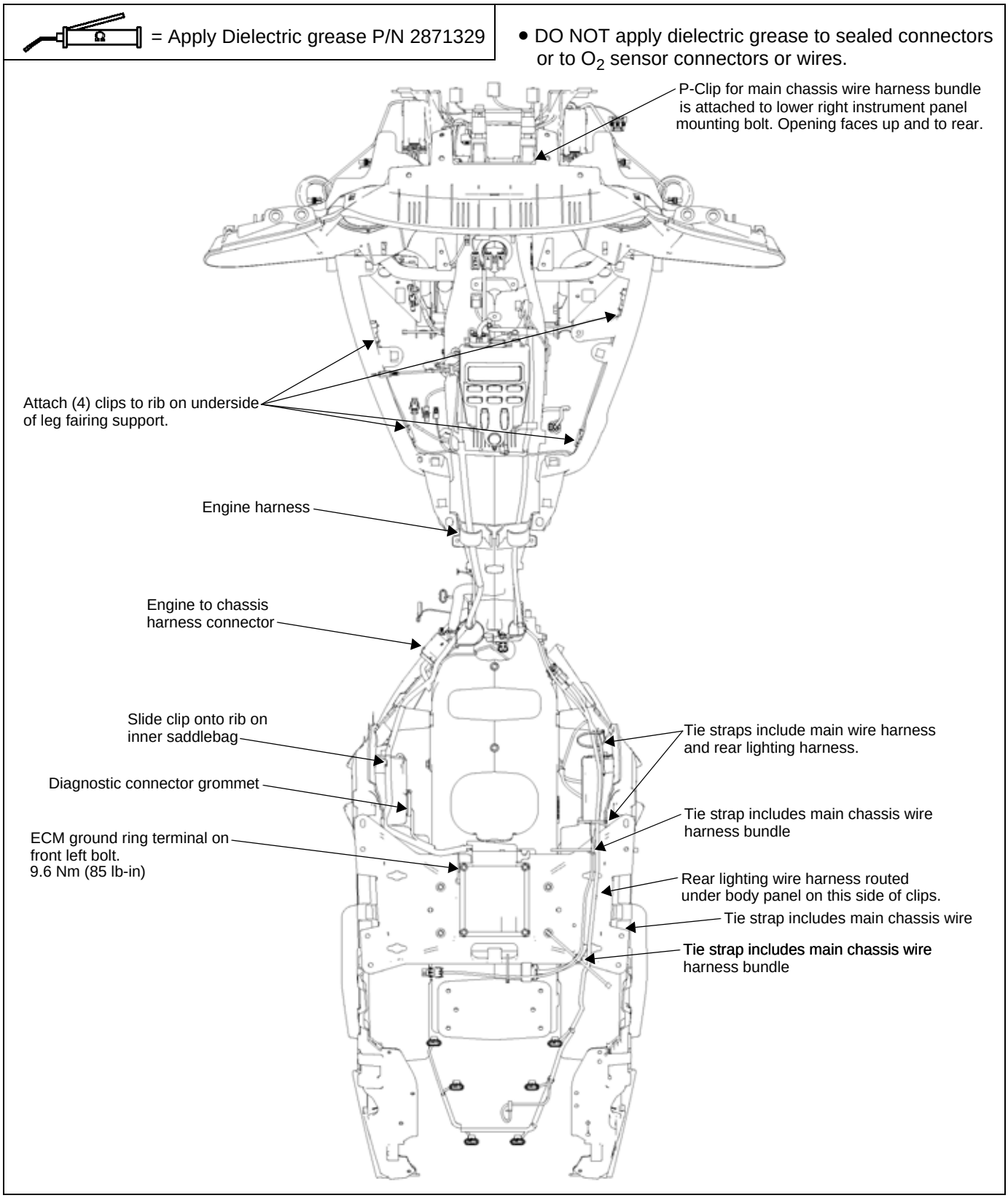

© 2009 Polaris Sales Inc.

WIRE HARNESS (SIDE & FRONT VIEW)

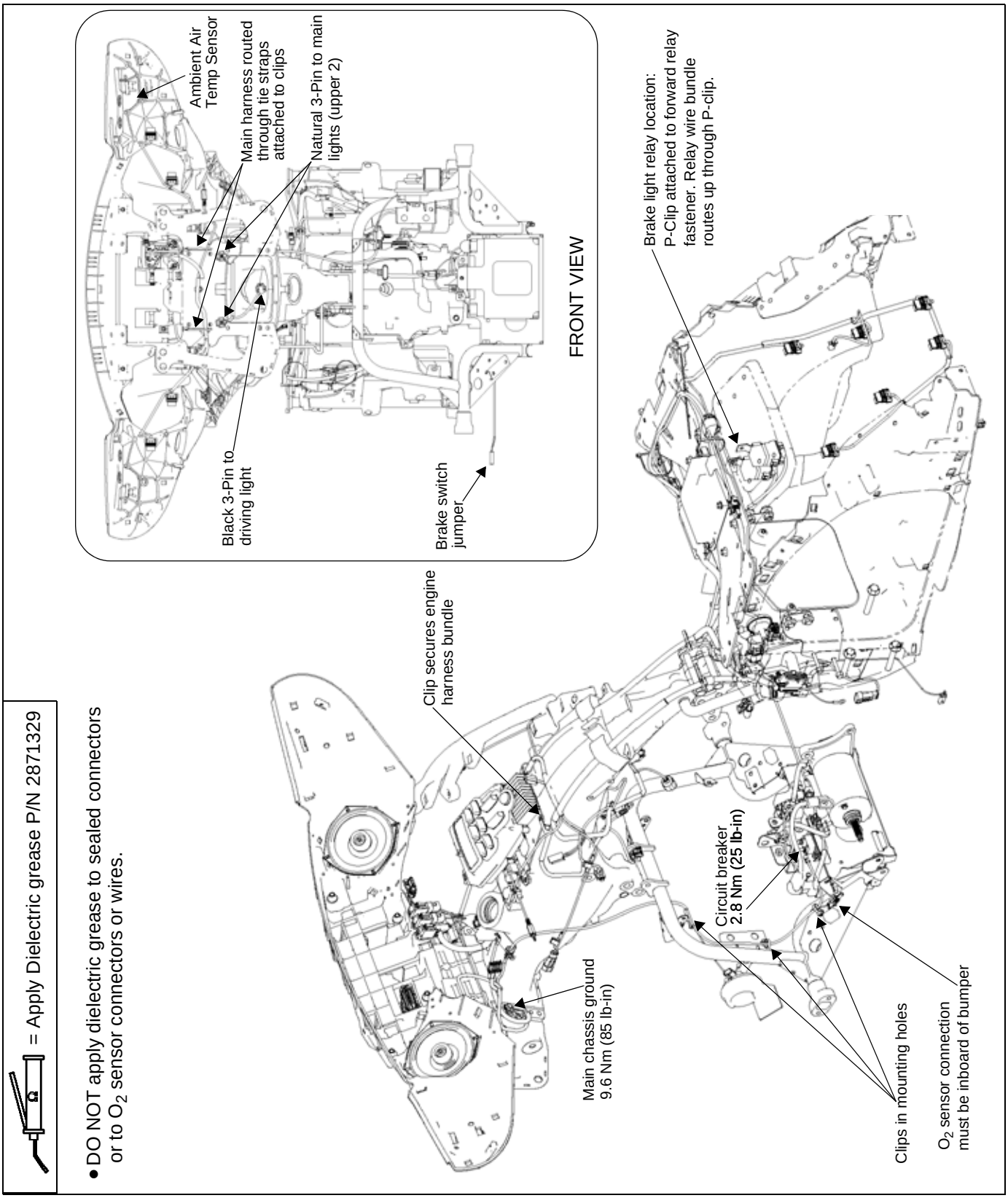

© 2009 Polaris Sales Inc.

ELECTRICAL CONNECTOR AND COMPONENT LOCATION

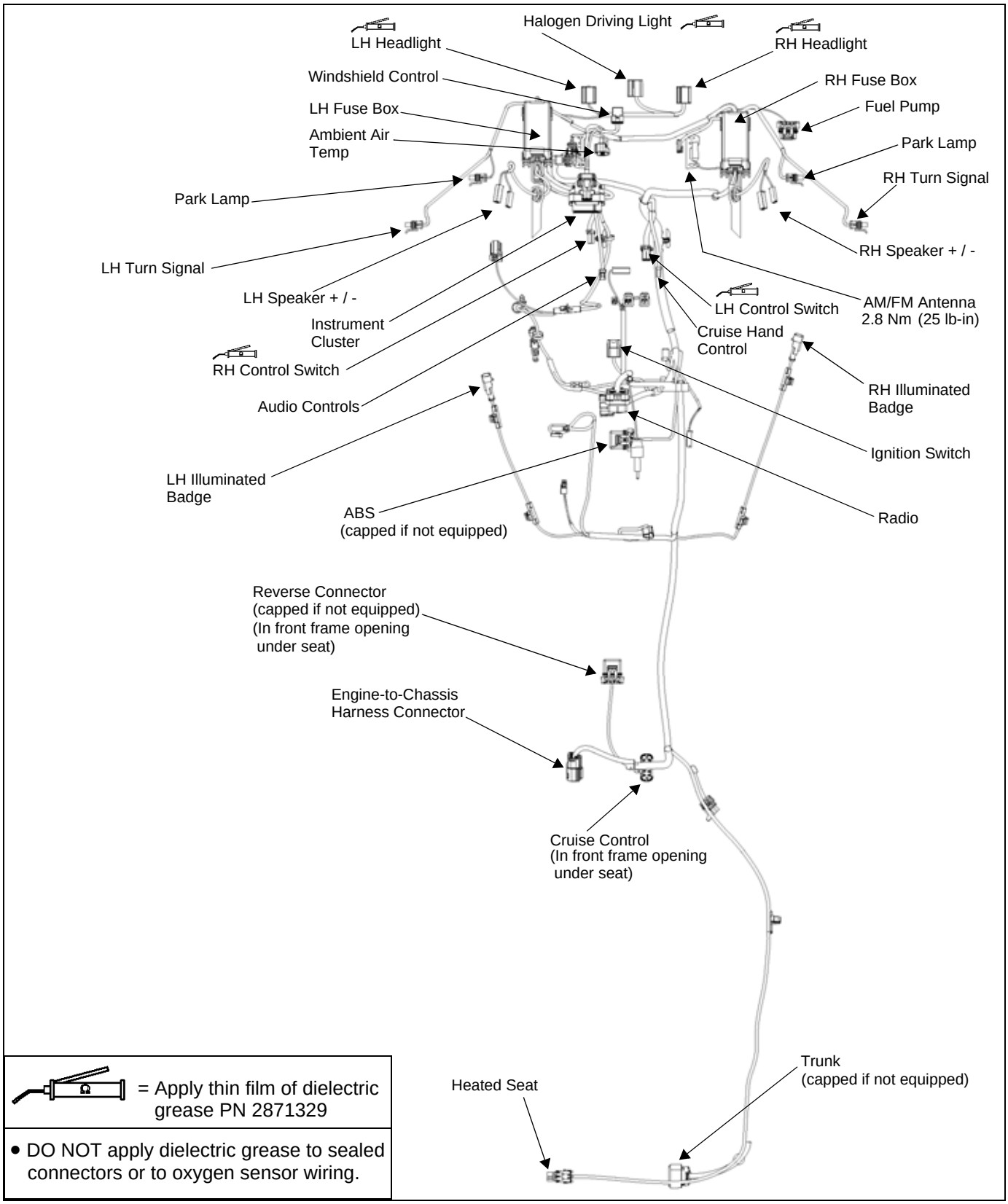

© 2009 Polaris Sales Inc.

ELECTRICAL CONNECTOR AND COMPONENT LOCATION

= Apply thin film of dielectric grease PN 2871329

- DO NOT apply dielectric grease to sealed connectors or to oxygen sensor wiring.

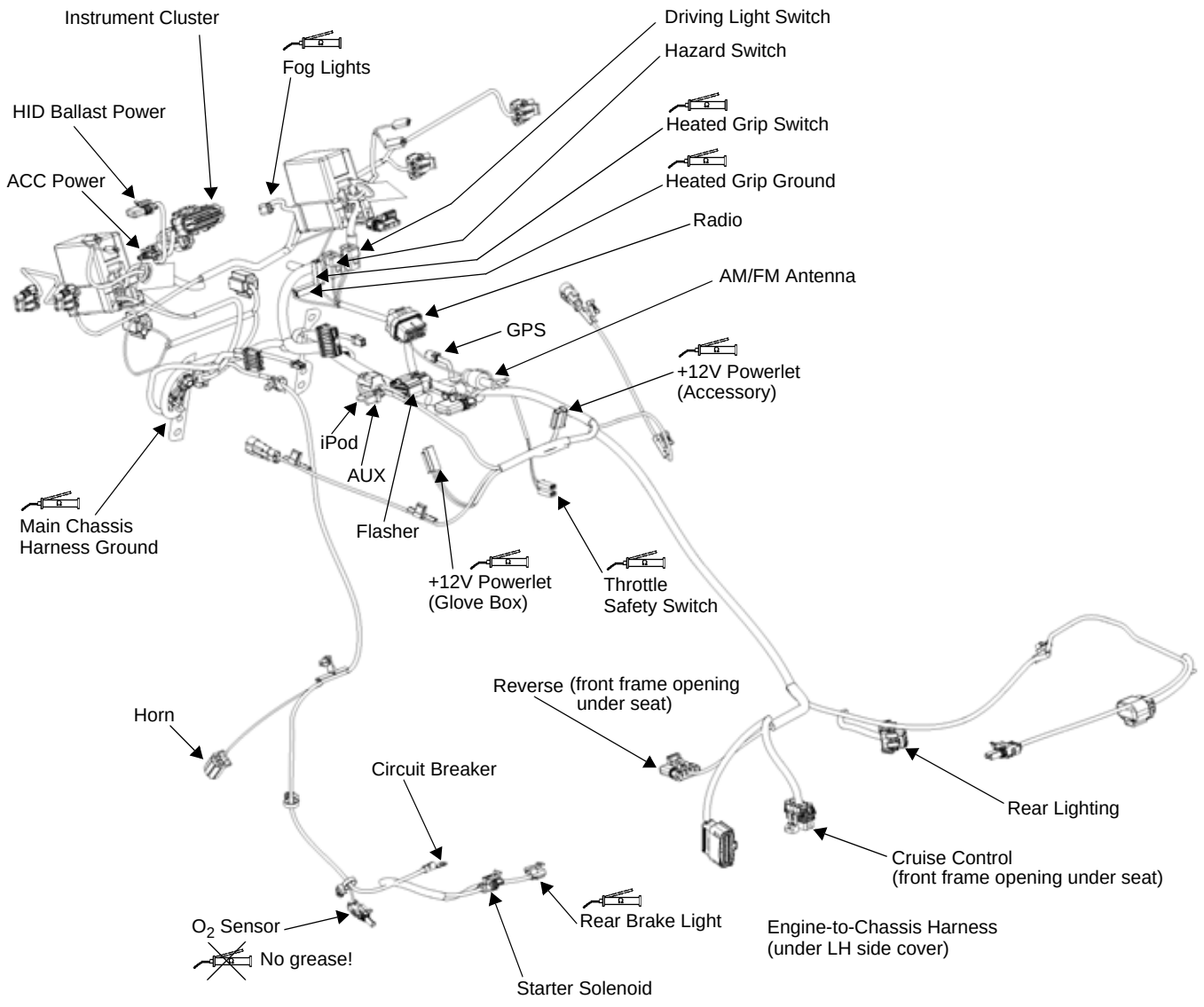

© 2009 Polaris Sales Inc.

NOTES

© 2009 Polaris Sales Inc.

2009-2010 CHASSIS WIRING DIAGRAM

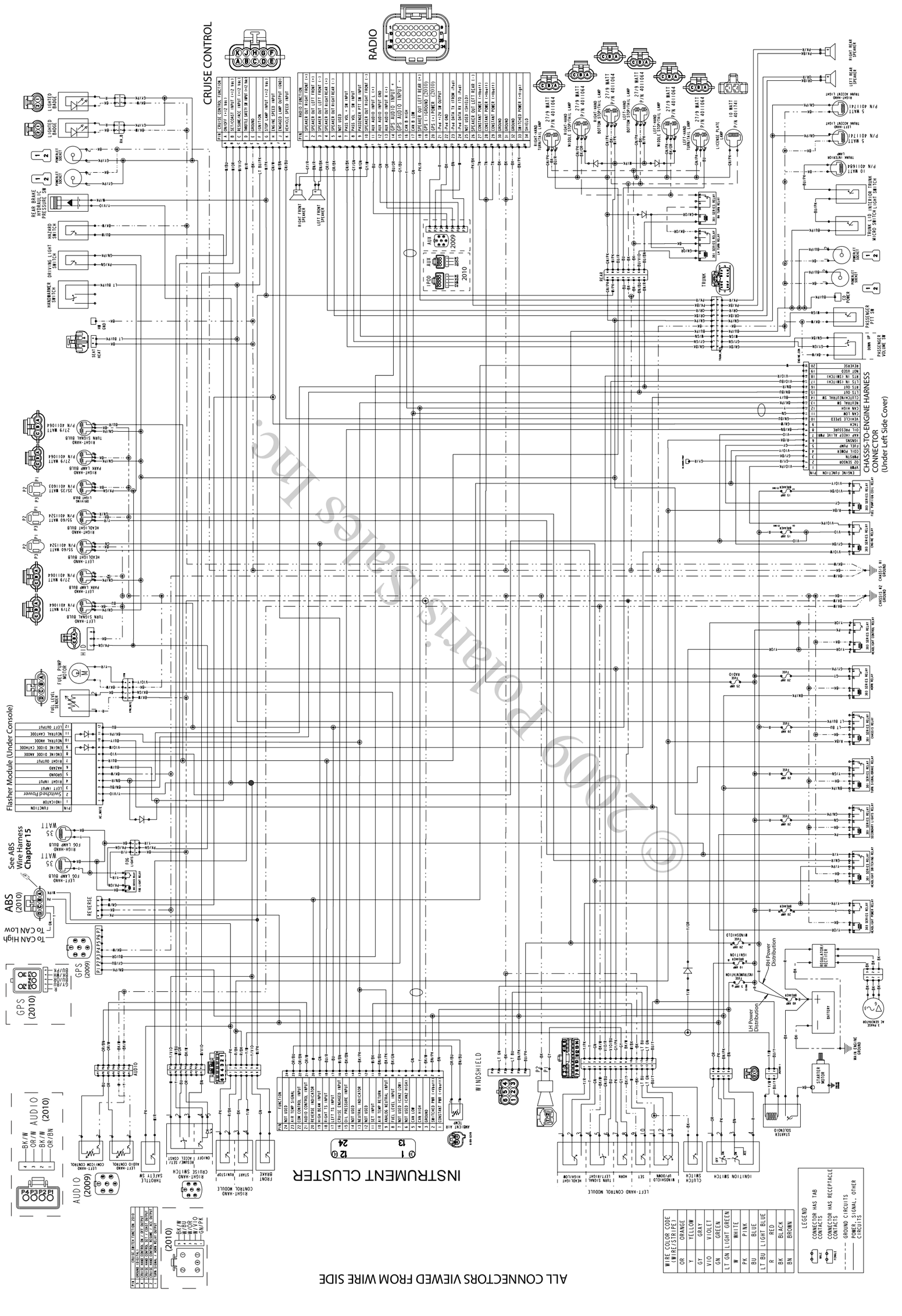

© 2009 Polaris Sales Inc.

2009-2010 ENGINE HARNESS WIRING DIAGRAM

WIRE COLOR CODE (WIRE/STRIPE)	
OR	ORANGE
Y	YELLOW
GY	GRAY
VIO	VIOLET
GN	GREEN
W	WHITE
PK	PINK
BU	BLUE
R	RED
BK	BLACK
BN	BROWN
TN	TAN
TRANS	TRANSPARENT

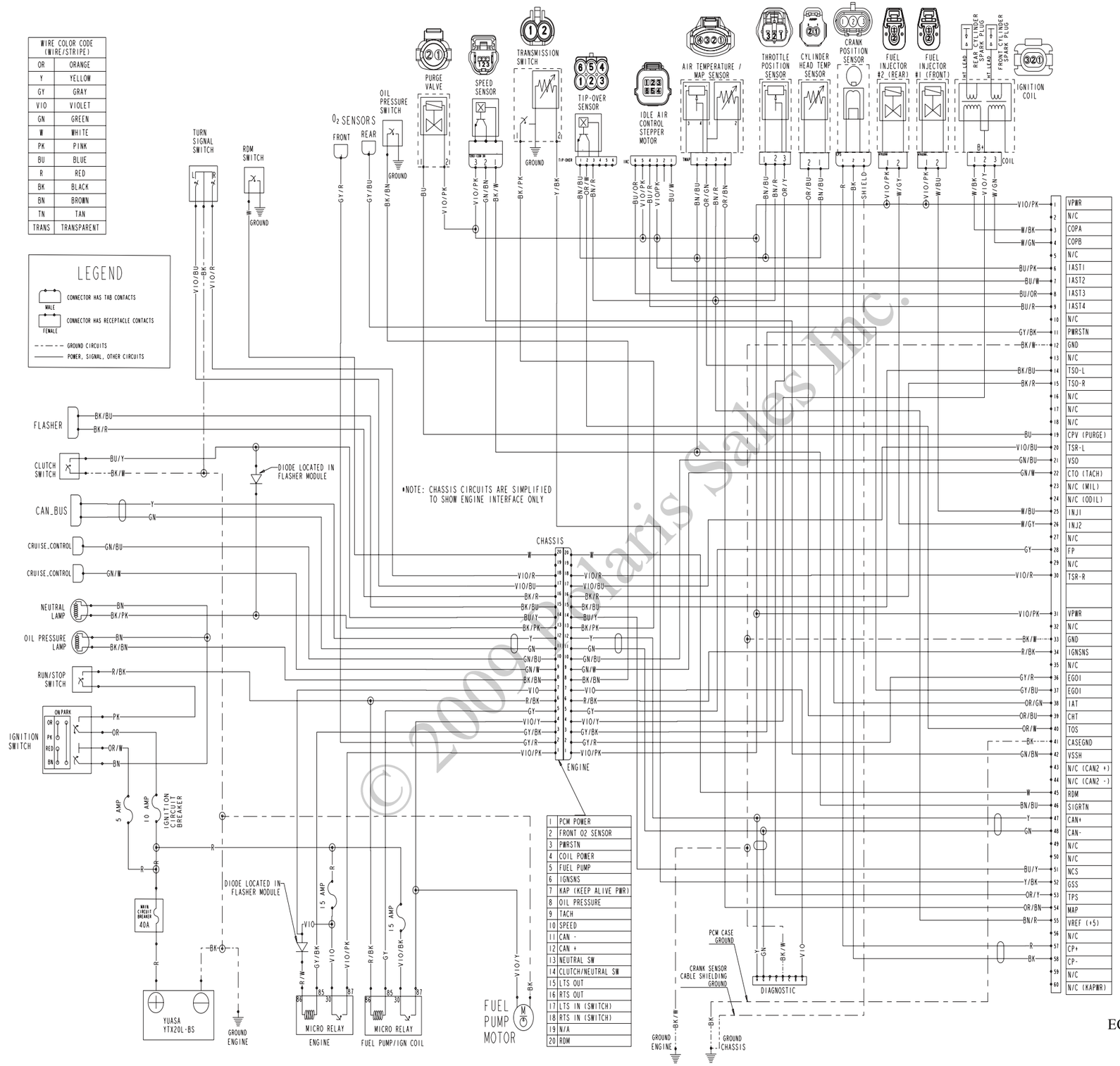

ECM CONNECTOR
(Under Seat)

Slide Lock End

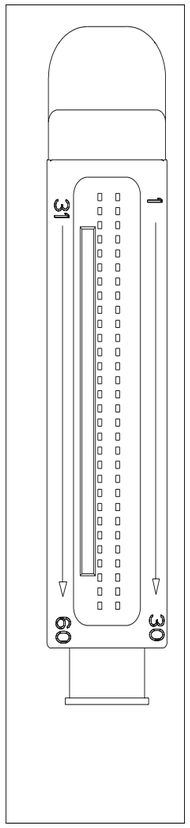

View From
Wire Side

Wire Harness End

© 2009 Polaris Sales Inc.

2008 - 2010
INFORMATION / ENTERTAINMENT WIRING DIAGRAM

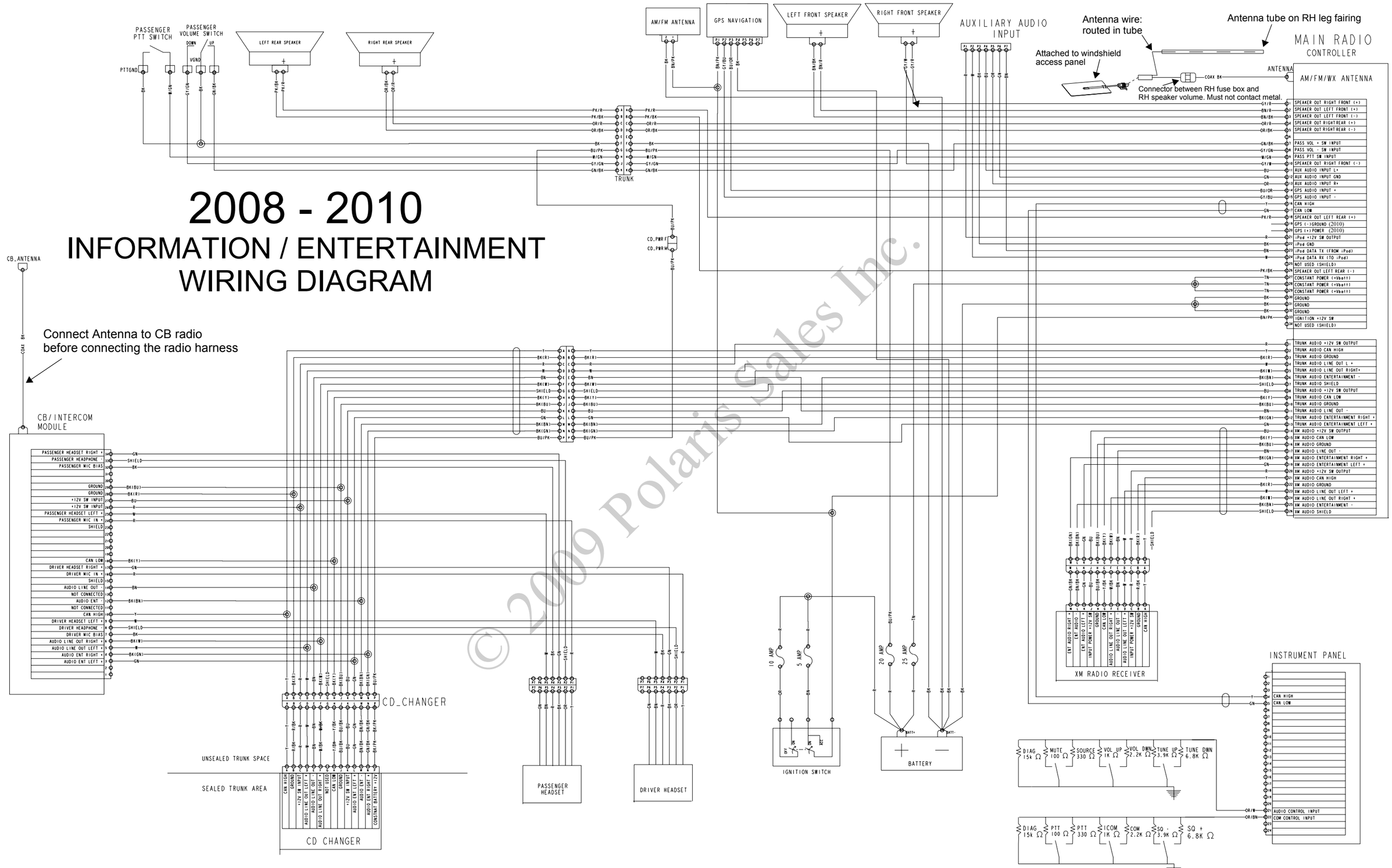

© 2009 Polaris Sales Inc.

2008 VICTORY VISION™
Engine Wiring Diagram

WIRE COLOR CODE (WIRE/STRIPE)	
OR	ORANGE
Y	YELLOW
GY	GRAY
VIO	VIOLET
GN	GREEN
W	WHITE
PK	PINK
BU	BLUE
R	RED
BK	BLACK
BN	BROWN
TN	TAN
TRANS	TRANSPARENT

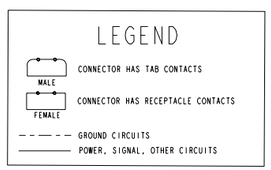

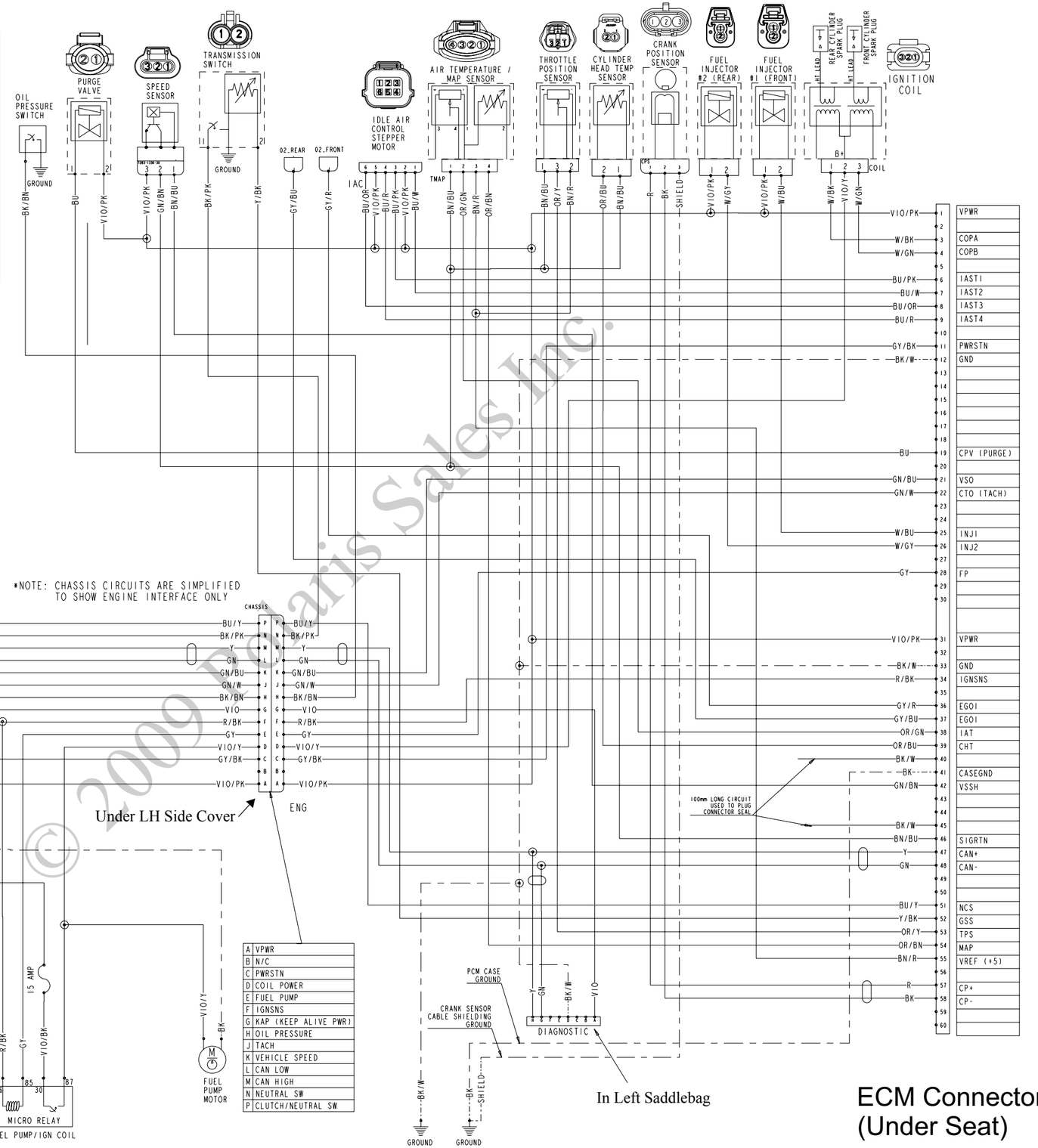

ECM CONNECTOR

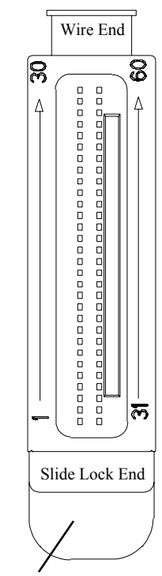

View from wire side

(Front of engine under electrical cover)

ECM Connector (Under Seat)

© 2009 Polaris Sales Inc.

2008 VICTORY VISION tm Chassis Wiring Diagram

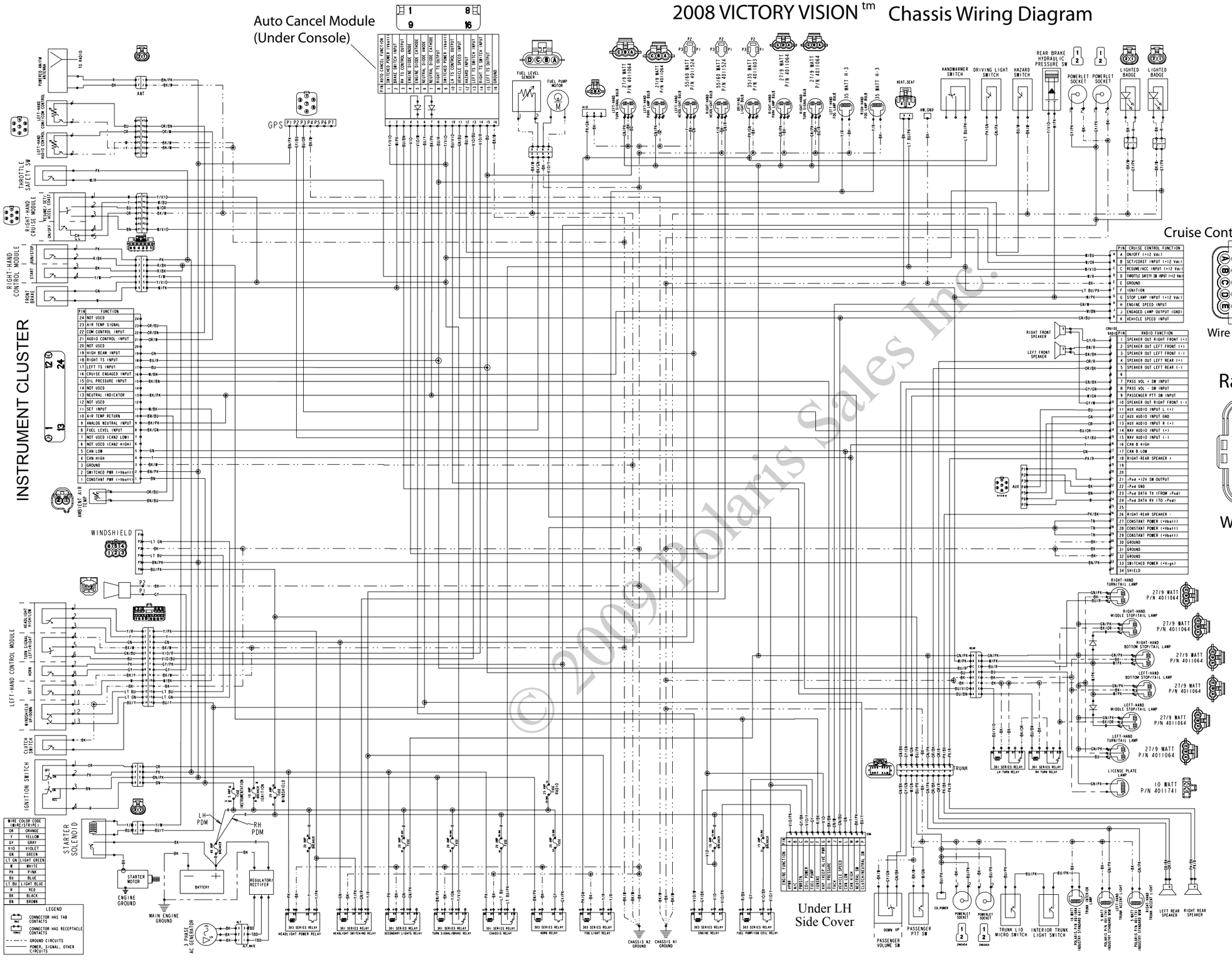

© 2009 Polaris Sales Inc.

2008 CHASSIS WIRING DIAGRAM

2008 VICTORY VISION® CHASSIS WIRING DIAGRAM

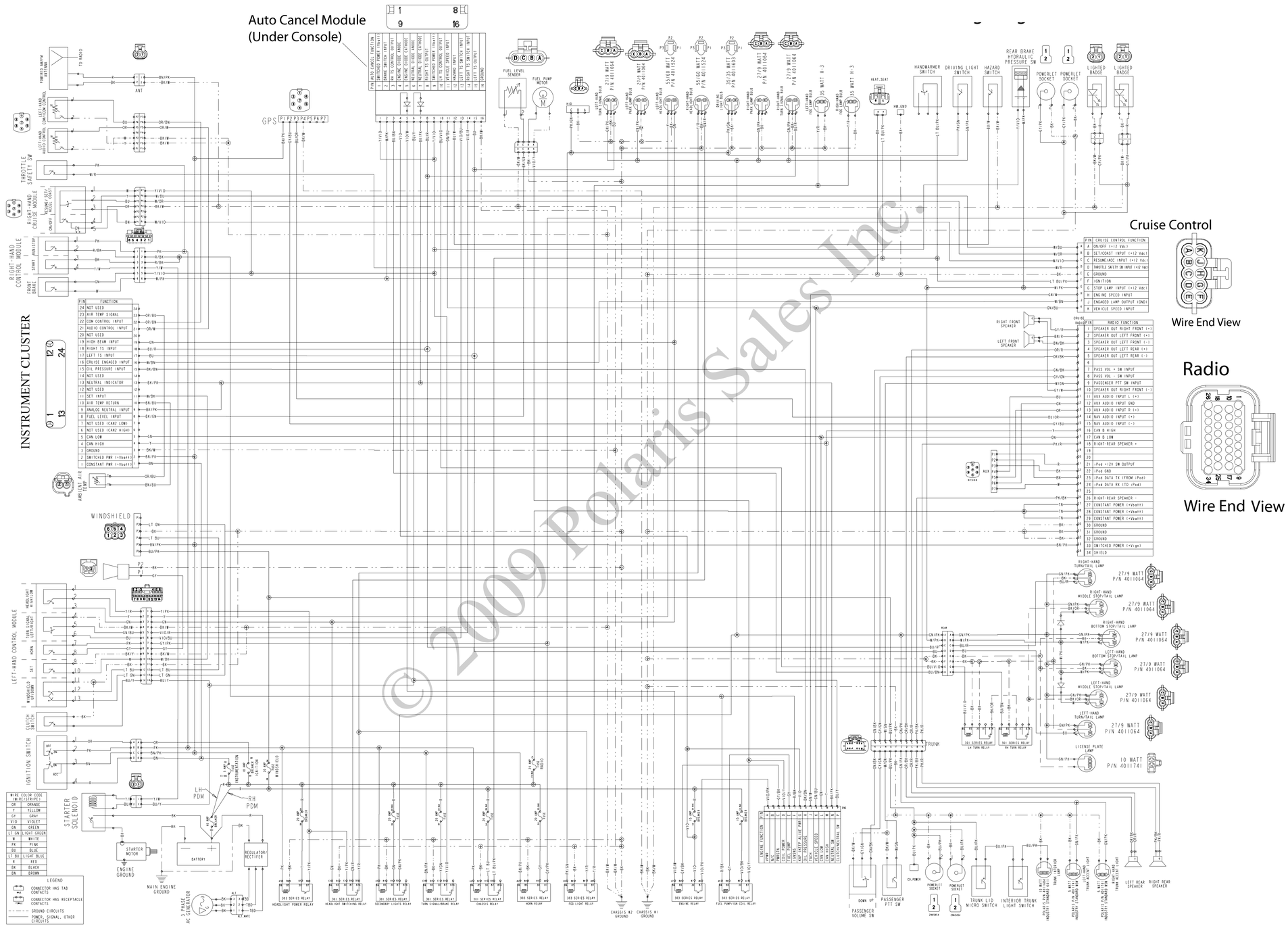

© 2009 Polaris Sales Inc.

2008 VICTORY VISION® ENGINE WIRING DIAGRAM

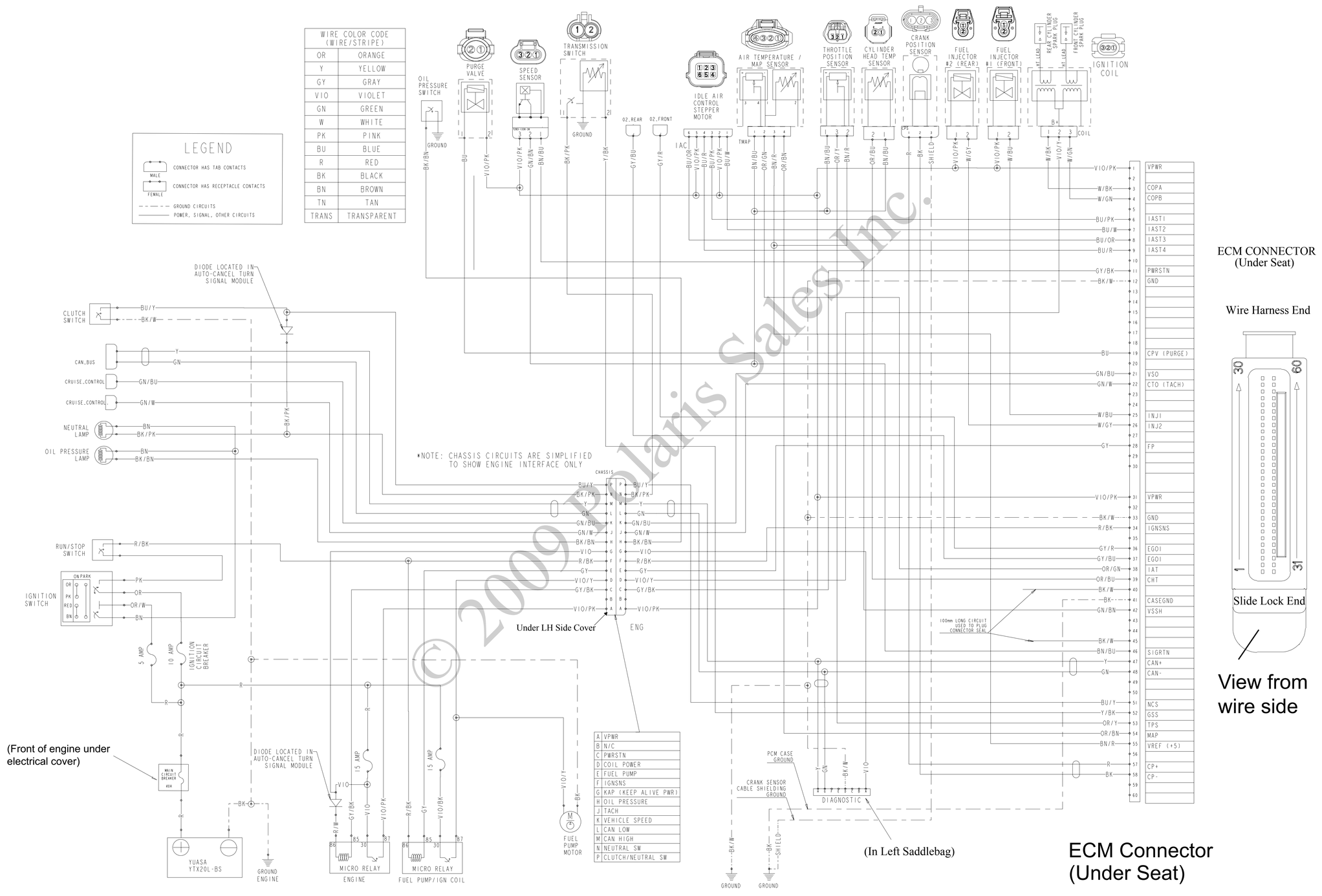

© 2009 Polaris Sales Inc.

2009 - 2010 VICTORY VISION® CHASSIS WIRING DIAGRAM

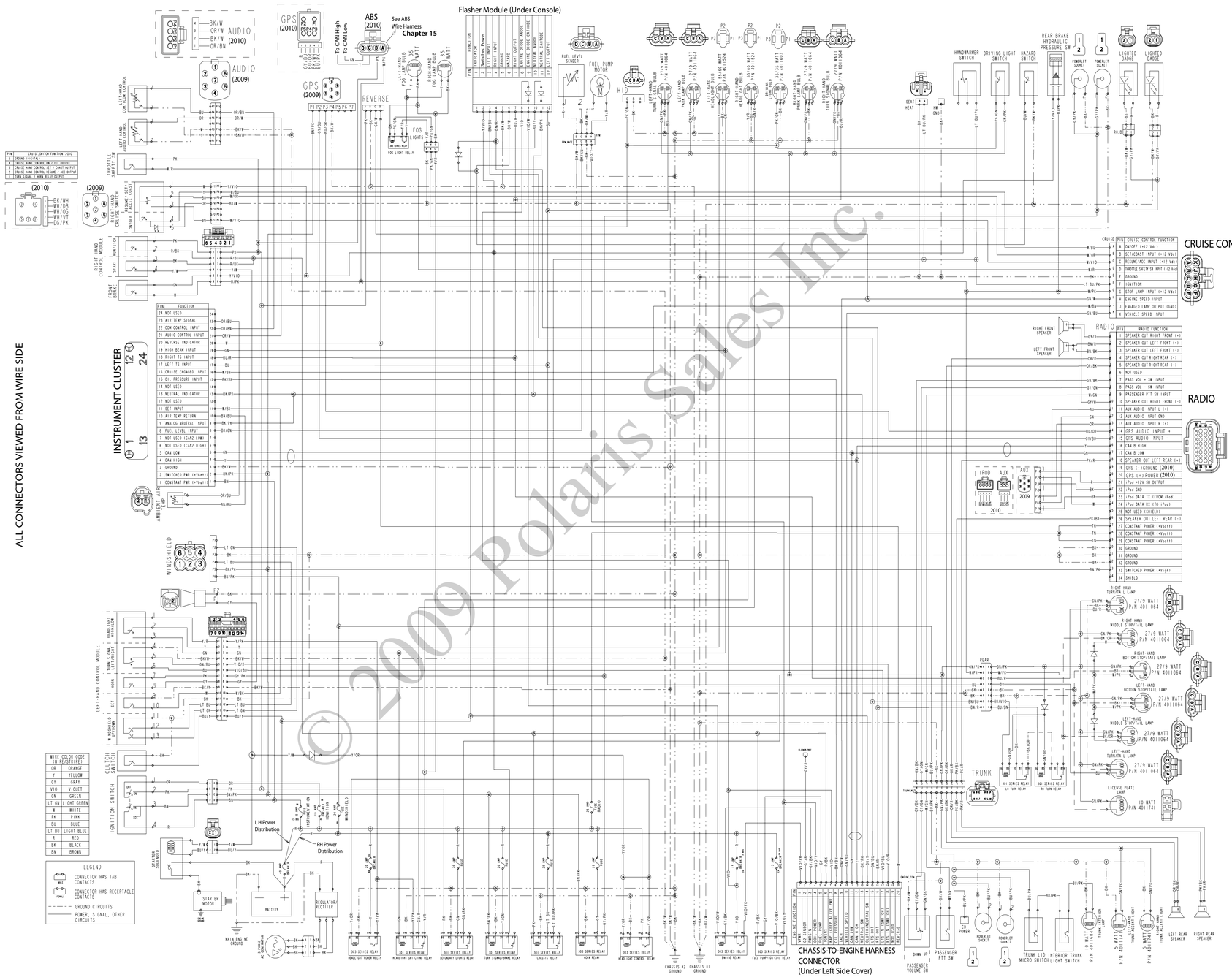

© 2009 Polaris Sales Inc.

2009 - 2010 VICTORY VISION® ENGINE WIRING DIAGRAM

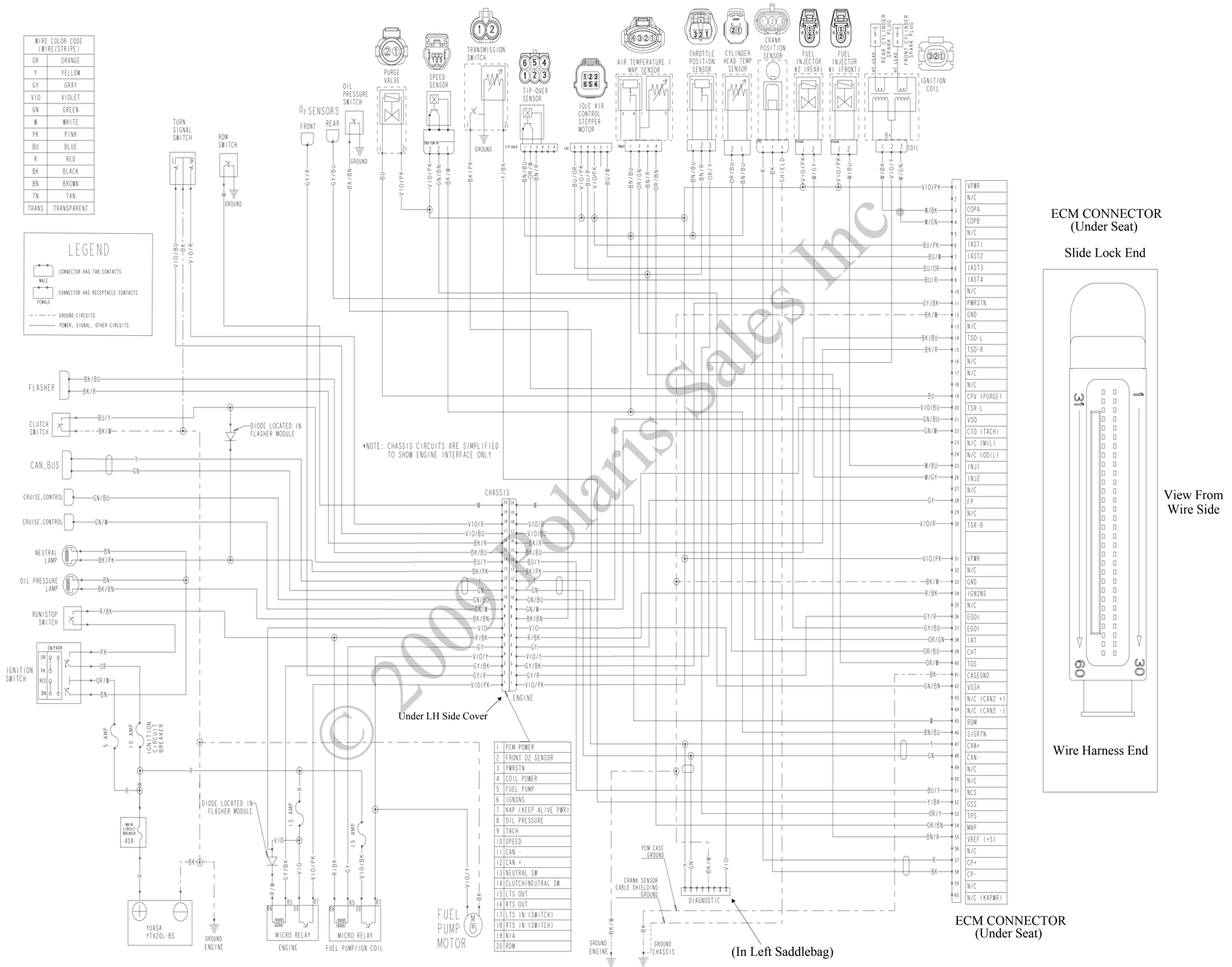

© 2009 Polaris Sales Inc.

2008 - 2010 VICTORY VISION® INFORMATION / ENTERTAINMENT WIRING DIAGRAM

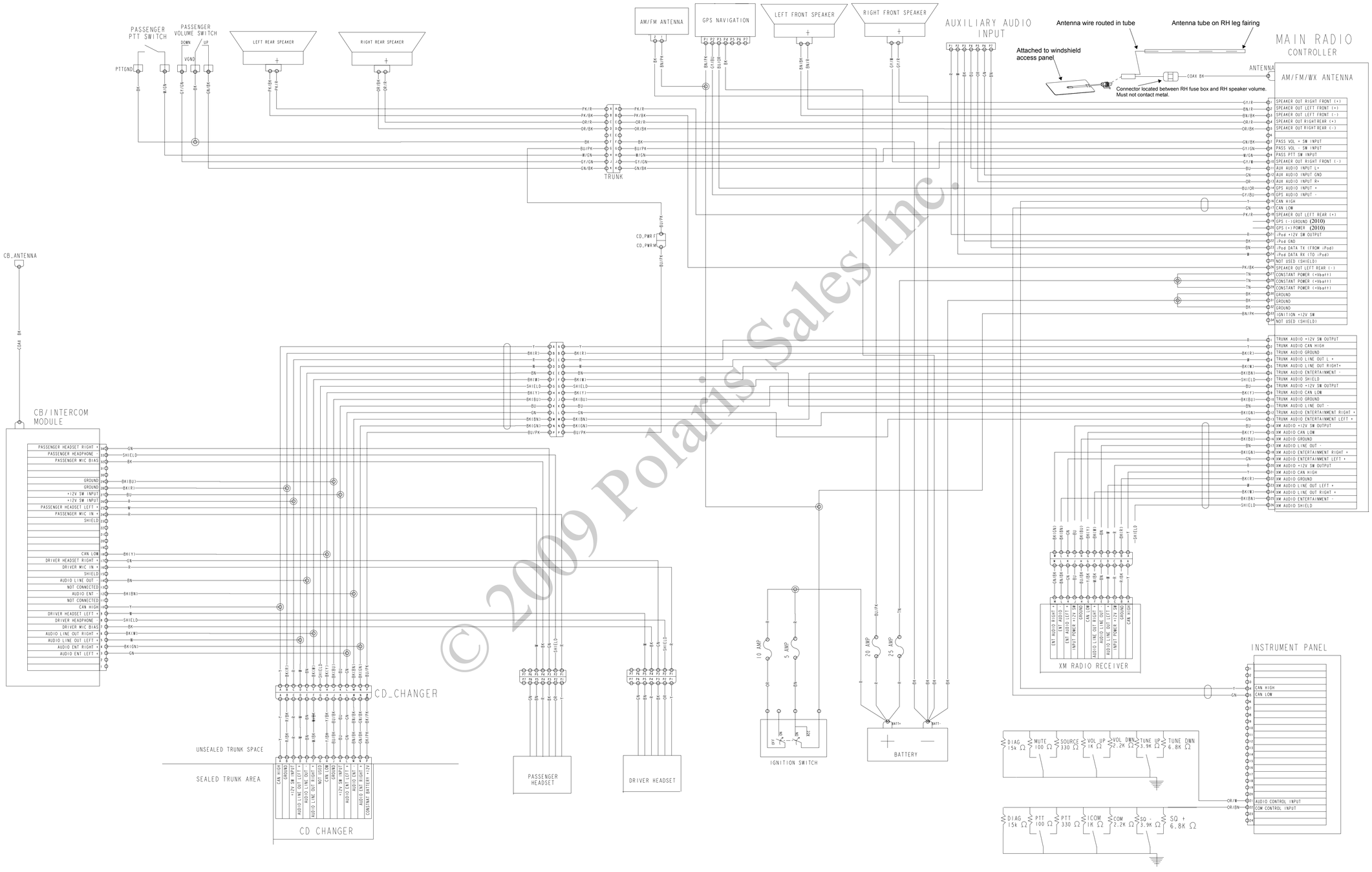

© 2009 Polaris Sales Inc.